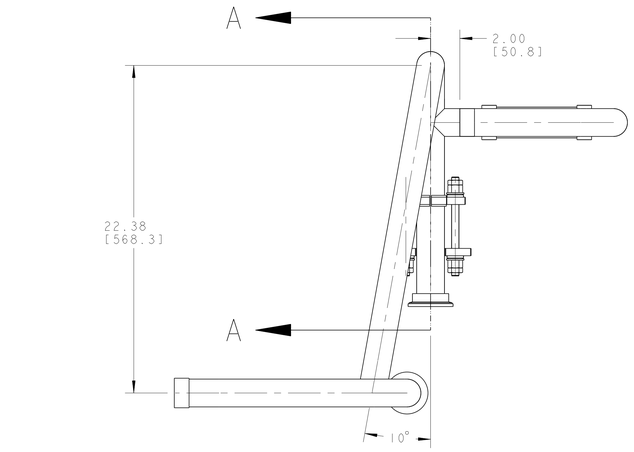

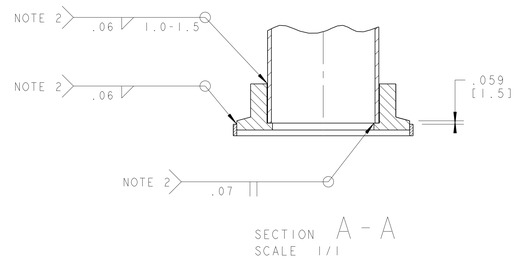

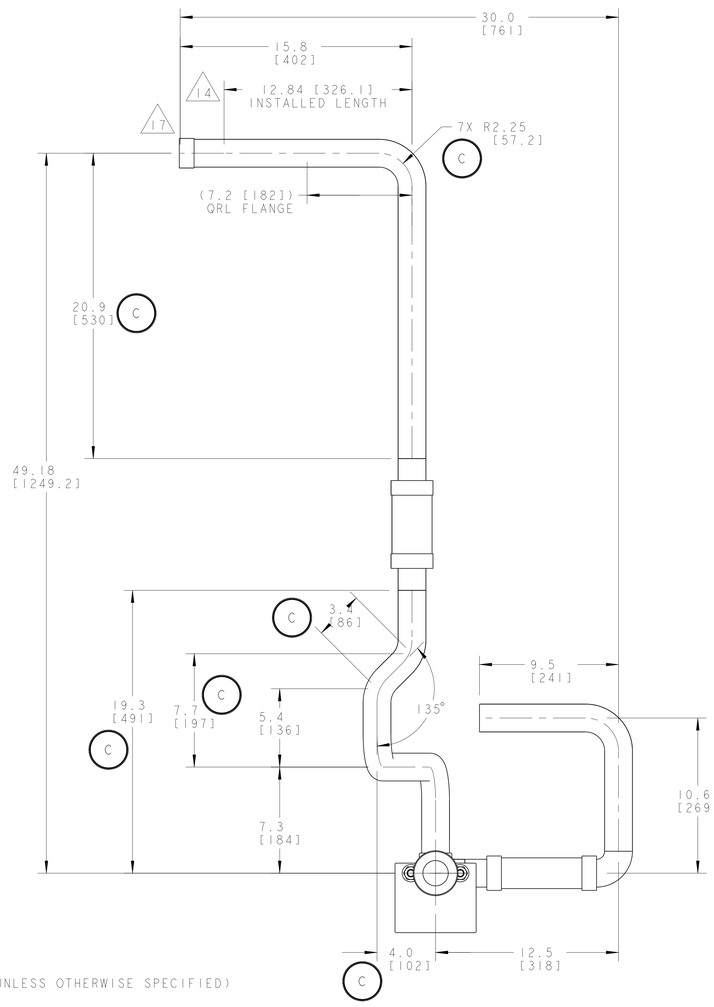

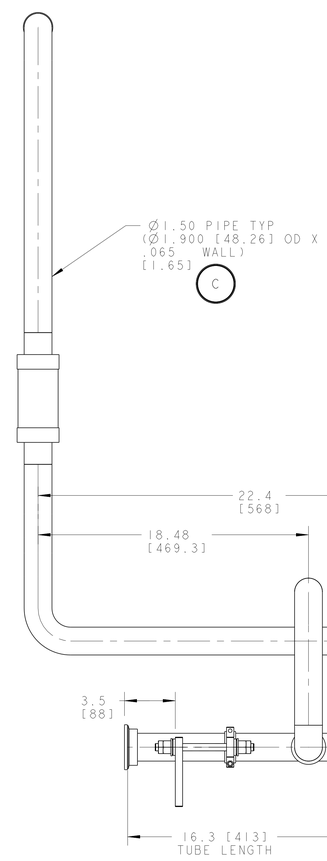

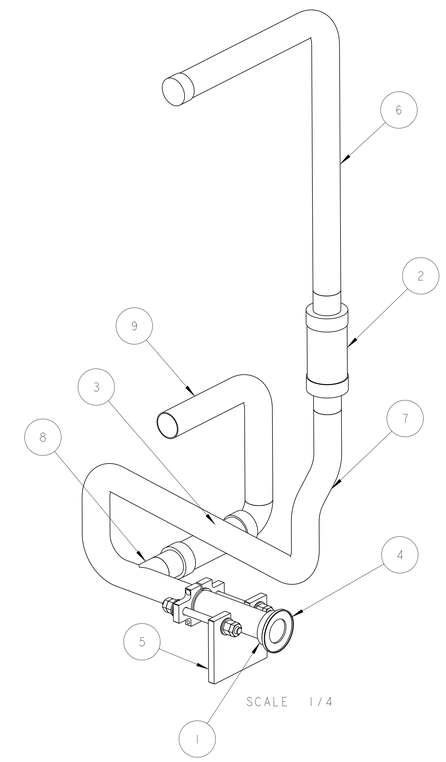

NOTES: (UNLESS OTHERWISE SPECIFIED)

1. THIS IS A CRYOGENIC VACUUM COMPONENT.
2. WELDING PROCEDURE: PER VENDOR SPECIFICATION WITH LBNL APPROVAL.
3. CLEANING PROCEDURE : PER VENDOR SPECIFICATION WITH LBNL APPROVAL.
4. PACKAGING AND STORAGE PROCEDURE OF THE COMPONENTS: PER VENDOR SPECIFICATION WITH LBNL APPROVAL.
5. DIMENSIONS AND TOLERANCING PER ANSI Y14.5M-1982. UNITS ARE IN INCHES [mm] UNLESS OTHERWISE SPECIFIED.
6. USE OF SULFUR OR SILICONE BEARING OILS, LUBRICANTS, OR COOLANTS ARE STRICTLY PROHIBITED.
7. USE OF RESIN OR RUBBER BONDED ABRASIVES UNDER POWER IS STRICTLY PROHIBITED. USE VITREOUS BONDED ABRASIVES ONLY.
8. VENDOR SUGGESTED CHANGES TO WELD PREPS; SUBJECT TO LBNL APPROVAL.
9. FITTINGS MAY BE USED IN PLACE OF BENDS; SUBJECT TO LBNL APPROVAL.
10. VENDOR SUGGESTED CHANGES TO TOLERANCES TO FACILITATE FABRICATION OR ASSEMBLY; SUBECT TO LBNL APPROVAL.
11. REMOVE ALL THE BURRS AND REAM THE ENDS FOR CIRCULARITY AND CLEAN ENDS.
12. TUBE END SURFACE MUST BE PERPENDICULAR TO THE TUBE AXIS WITHIN +/-.010.
13. PERFORM ACCEPTANCE TESTS PER LBNL SPECIFICATION M989. B
14. A MARK DESIGNATING THE INSTALLED LENGTH WILL BE UTILIZED DURING FINAL INSTALLATION OF THE DEEDBOX ASSEMBLY. MARK, SCRIBE OR ETCH THIS LOCATION IN A PERMANENT MANNER, SUBJECT TO LBNL APPROVAL, TO AN ACCURACY OF 0.063".
15. PROVIDE A MINIMUM LENGTH OF 4.0" OF STRAIGHT, SMOOTH PIPE ON THE INDICATED SIDE OF THE INSTALLED LENGTH MARK FOR PIPE WELDING DURING FINAL INSTALLATION OF THE FEEDBOX ASSEMBLY.
16. PIPE MUST BE STRAIGHT AND SMOOTH (NO BUMPS) FOR 1.5" ON EITHER SIDE OF THE CENTER-PLANE OF THE SUPPORT. B
17. CAP BOTH ENDS OF PIPE TO FACILITATE ACCEPTANCE TESTS. B

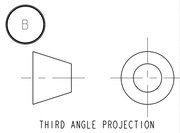

REV	DWG	CHK	ZONE	DATE	CHANGES
C	RLM	JPZ		6/9/03	REROUTE: 19.3 WAS 21.3, 7.7 WAS 9.7, 3.4 WAS 6.2, 6.0 WAS 4.0; R 2.25 WAS R 1.9; 20.9 WAS 18.9; PIPE CALL OUT
B	ARH	DPO		02/24/03	REVISED DRAWING NOTES 13, 16 & 17
A	ARH	SPV		10-29-02	INITIAL RELEASE

ITEM	PART NO	REQD	DESCRIPTION	MATERIAL
9	-	1	PIPE, PER ASTM A312	SS 304L
8	-	1	PIPE, PER ASTM A312	SS 304L
7	-	1	PIPE, PER ASTM A312	SS 304L
6	-	1	PIPE, PER ASTM A312	SS 304L
5	25H406	1	THRUST SUPPORT, BUS DUCT	SS 304L
4	-	1	WELD RING, ID 75mm, FNAL SUPPLIED	SS 304L
3	-	1	BRAIDED FLEX HOSE, 1 1/2" ID X 5.5" LL	SS 300 SERIES
2	-	1	BRAIDED FLEX HOSE, 1 1/2" ID X 4" LL	SS 300 SERIES
1	251307	1	FLANGE, FNAL# 5520-MB-390033B, MODIFIED	-

UNLESS OTHERWISE SPECIFIED
TOLERANCES: X.X ± 0.1 FRAC. ± 1/64; X.XX ± 0.03 Angles ± 1.00°; X.XXX ± 0.010 FINISH 125 μin
DO NOT SCALE PRINT
THREADS ARE CLASS 2
CHAMFER ENDS OF ALL SCREW THREADS 30°
CUT ROUND, 1.5 THREAD RELIEF ON MACHINED THREADS
BREAK EDGES .016 MAX. ON MACHINED WORK
REMOVE BURRS, WELD SPLATTER & LOOSE SCALE
IN ACCORDANCE WITH ASME Y14.5M & B46.1

SHOP ORDERS
ACCT NO. / NO. REQD
DEL TO
SURFACE TREATMENT -
IDENT METHOD TAG
PROJECT NUMBER N/A
PROJECT NAME N/A
DWN R. LaMANTIA DATE 21-Oct-02
CHK S.VIROSTEK DATE 29-Oct-02
APP D.OSHATZ DATE 21-Oct-02
SER NO. -
DATE ISSD -
DATE REQD -

ERNEST ORLANDO LAWRENCE BERKELEY NATIONAL LABORATORY
UNIVERSITY OF CALIFORNIA - BERKELEY

LHC IR FEEDBOX
CRYOGENICS
PIPE WELDMENT, LD ORL / LD CROSSOVER

MICROFILMED: | DWG. TYPE: ASSEM | SHOWN ON: - | SCALE: 1/4 | DO NOT SCALE PRINTS
PATENT CLEAR: | DESIGN ACCT. NO.: Z5LCE2 | CATEGORY CODE: LH2003 | DWG. NO.: 25M9176 | SIZE: C | REV.:
SHEET 1 OF 1

DWG. NO. 25M9176 | SIZE C | REV 1