DESCRIPTION	MATERIAL	MAT. LOCATION
SQUARE COPPER BAR	COPPER, OFHC, C101	-

NOTES: (UNLESS OTHERWISE SPECIFIED)

1. THIS IS A CRYOGENIC VACUUM COMPONENT.
2. CLEANING PROCEDURE : PER VENDOR SPECIFICATION WITH LBNL APPROVAL.
3. PACKAGING AND STORAGE PROCEDURE OF THE COMPONENTS: PER VENDOR SPCIFICATION WITH LBNL APPROVAL.
4. DIMENSIONS AND TOLERANCING PER ANSI Y14.5M-1982. UNITS ARE IN INCHES UNLESS OTHERWISE SPECIFIED.
5. USE OF SULFUR OR SILICONE BEARING OILS, LUBRICANTS, OR COOLANTS ARE STRICTLY PROHIBITED.
6. USE OF RESIN OR RUBBER BONDED ABRASIVES UNDER POWER IS STRICTLY PROHIBITED. USE VITREOUS BONDED ABRASIVES ONLY.

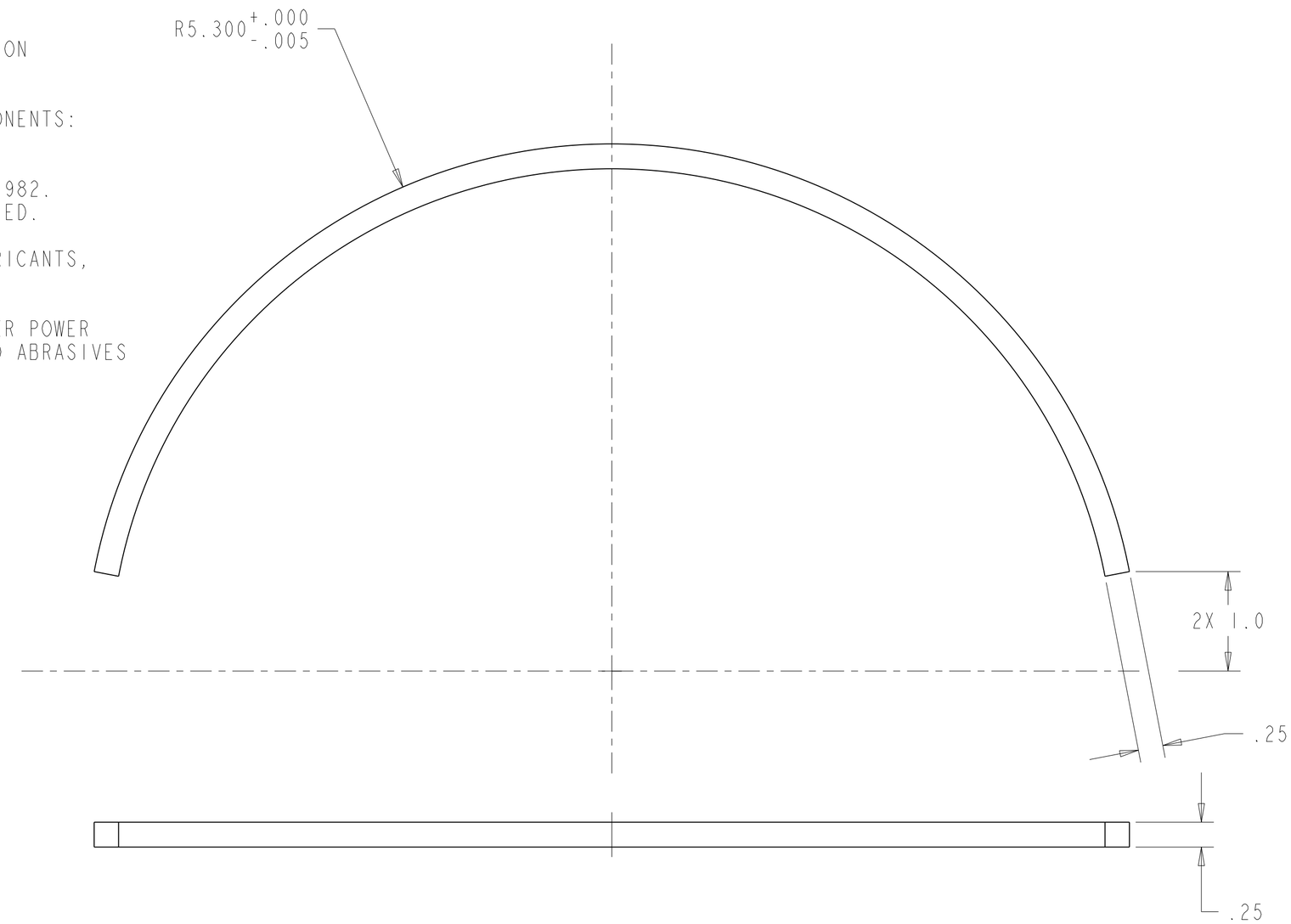

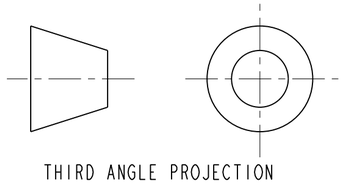

REV	DWG	CHK	ZONE	DATE	CHANGES
A	RLM	DPO		10-4-02	INITIAL RELEASE

UNLESS OTHERWISE SPECIFIED

TOLERANCES		
	X.X ± 0.1	FRAC. ± 1/64
	X.XX ± 0.03	Angles ± 1.00°
	X.XXX ± 0.010	FINISH 125 √(μin)

DO NOT SCALE PRINT

THREADS ARE CLASS 2
CHAMFER ENDS OF ALL SCREW TREADS 30°
CUT ROUND, 1.5 THREAD RELIEF ON MACHINED THREADS
BREAK EDGES .016 MAX. ON MACHINED WORK
REMOVE BURRS, WELD SPLATTER & LOOSE SCALE
IN ACCORDANCE WITH ASME Y14.5M & B46.1

SHOP ORDERS

SER NO.	-		
ACCT NO.		NO. REQD	DATE ISSD -
DEL TO			DATE REQD -
SURFACE TREATMT	-		
IDENT METHOD	TAG		
PROJECT NUMBER	N/A		N/A (logo)
PROJECT NAME	N/A		
DWG BY	R LA MANTIA		DATE 11-Sep-02
CHK BY	D OSHATZ		DATE 27-Sep-02
APR BY	D OSHATZ		DATE 27-Sep-02

ERNEST ORLANDO LAWRENCE BERKELEY NATIONAL LABORATORY
UNIVERSITY OF CALIFORNIA - BERKELEY

LHC IR FEEDBOX
VACUUM
RETAINING BAR

MICROFILMED:	DWG. TYPE	SHOWN ON	SCALE: 1.000	DO NOT SCALE PRINTS
	PART	-	SHEET 1 OF 1	
PATENT CLEAR:	DESIGN ACCT. NO.	CATEGORY CODE	DWG. NO.	SIZE / REV.
	Z5LCE2	LH2002	25M9153	A

Dwg. File: 25M915 Model File: RETAINER_STRIP_A

DWG. NO. 25M9153 SIZE A REV. A SH. 1

Rev. 1/28/2000 J. E. Olsen