ITEM	PART NO	REQD	DESCRIPTION	MATERIAL
8	-	1	SHOULDER TOOLING BALL, MCMASTER #8481A25, MODIFIED	-
7	-	1	SHELL, ROLLED	316L SS
6	-	6	SCH, M4X.7, 20LG., McMASTER #91292A121	SS 18-8
5	-	6	NUT, M4 McMASTER #91828A231	SS 18-8
4	-	1	GASKET, MDC #191000	CU
3	-	1	END CAP	316L SS
2	-	1	1.33 CONFLAT HALF NIPPLE, MDC 401000	-
1	-	1	1.33 BLANK CFF, MDC 110000, MODIFIED	SS

NOTES: (UNLESS OTHERWISE SPECIFIED)

1. THIS IS A CRYOGENIC VACUUM COMPONENT.
2. CLEAN AND DEGREASE PARTS BEFORE WELDING.
3. ITEM 7 SHELL ROLLED FROM 12GA. SHEET, ANNEALED, 2B FINISHED.
4. PACKAGE COMPLETED ASSEMBLY FOR SHIPMENT AND STORAGE AS REQUIRED.
5. DIMENSIONS AND TOLERANCING PER ANSI Y14.5M-1982. UNITS ARE IN INCHES [mm] UNLESS OTHERWISE SPECIFIED.
6. USE OF SULFUR OR SILICONE BEARING OILS, LUBRICANTS, OR COOLANTS ARE STRICTLY PROHIBITED.
7. USE OF RESIN OR RUBBER BONDED ABRASIVES UNDER POWER IS STRICTLY PROHIBITED. USE VITREOUS BONDED ABRASIVES ONLY.
8. REMOVE ALL BURRS, REAM AND CLEAN ENDS.
9. PERFORM ACCEPTANCE TESTS PER APPLICABLE LBNL FABRICATION TRAVELER.
10. LEAK RATE NOT TO EXCEED 5E-10 STANDARD CUBLIC CENTIMETERS PER SECOND, HELIUM, AFTER 2X THERMAL SHOCKS TO LN TEMP.

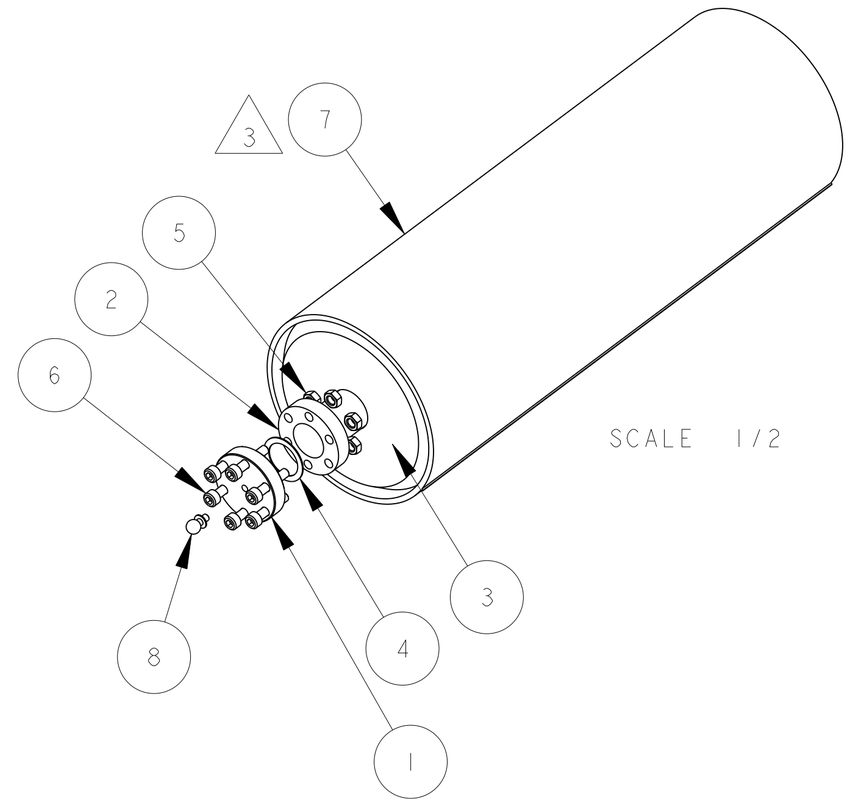

SCALE 1/2

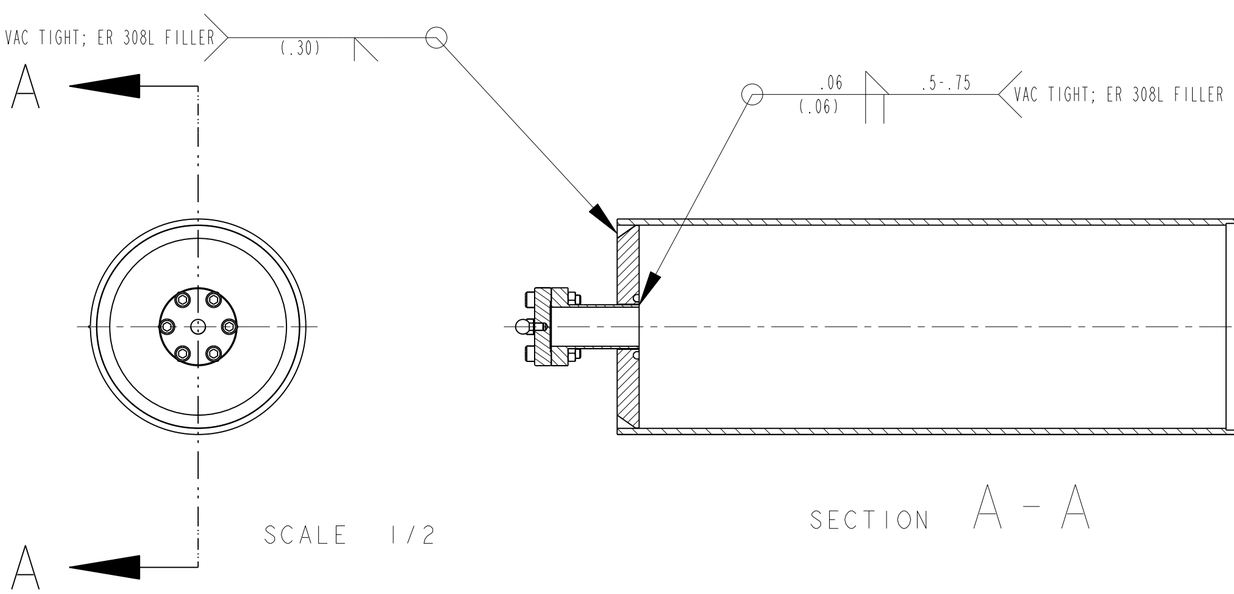

SCALE 1/2

SECTION A - A

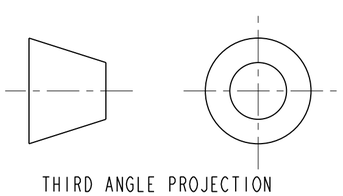

THIRD ANGLE PROJECTION

REV	DWG	CHK	ZONE	DATE	CHANGES
A	RLM	JPZ		1/3/03	INITIAL RELEASE

UNLESS OTHERWISE SPECIFIED

TOLERANCES		
	X.X ± 0.1	FRAC. ± 1/64
	X.XX ± 0.02	Angles ± 1.00°
	X.XXX ± 0.005	FINISH 125√(μin)

DO NOT SCALE PRINT

THREADS ARE CLASS 2
CHAMFER ENDS OF ALL SCREW TREADS 30°
CUT ROUND, 1.5 THREAD RELIEF ON MACHINED THREADS
BREAK EDGES .016 MAX. ON MACHINED WORK
REMOVE BURRS, WELD SPLATTER & LOOSE SCALE
IN ACCORDANCE WITH ASME Y14.5M & B46.1

SHOP ORDERS

ACCT NO.	NO. REQD	SER NO.	-
DEL TO		DATE ISSD	-
SURFACE TREATMT	-	DATE REQD	-
IDENT METHOD	TAG		
PROJECT NUMBER	N/A		
PROJECT NAME	N/A		
DWG BY	S.Bartlett	DATE	04-Dec-02
CHK BY	R LA MANTIA	DATE	03-Jan-03
APR BY	J.Zbasnik	DATE	03-Jan-03

N/A (logo)

ERNEST ORLANDO LAWRENCE
BERKELEY NATIONAL LABORATORY
UNIVERSITY OF CALIFORNIA - BERKELEY

LHC IR FEEDBOX
CRYOGENICS
MBXI TEST CAP

MICROFILMED:	DWG. TYPE	SHOWN ON	SCALE: 1/2	DO NOT SCALE PRINTS
	ASSEM	-	SHEET 1 OF 3	
PATENT CLEAR:	DESIGN ACCT. NO.	CATEGORY CODE	DWG. NO. 25M9133	SIZE A
	Z5LCE2	LH2003		REV. A

DWG. NO. 25M9133 SIZE A REV. SH. 1

Res. 1/29/2000 J. R. Osborn

Dwg. File: 25M913 Model File: 25M913

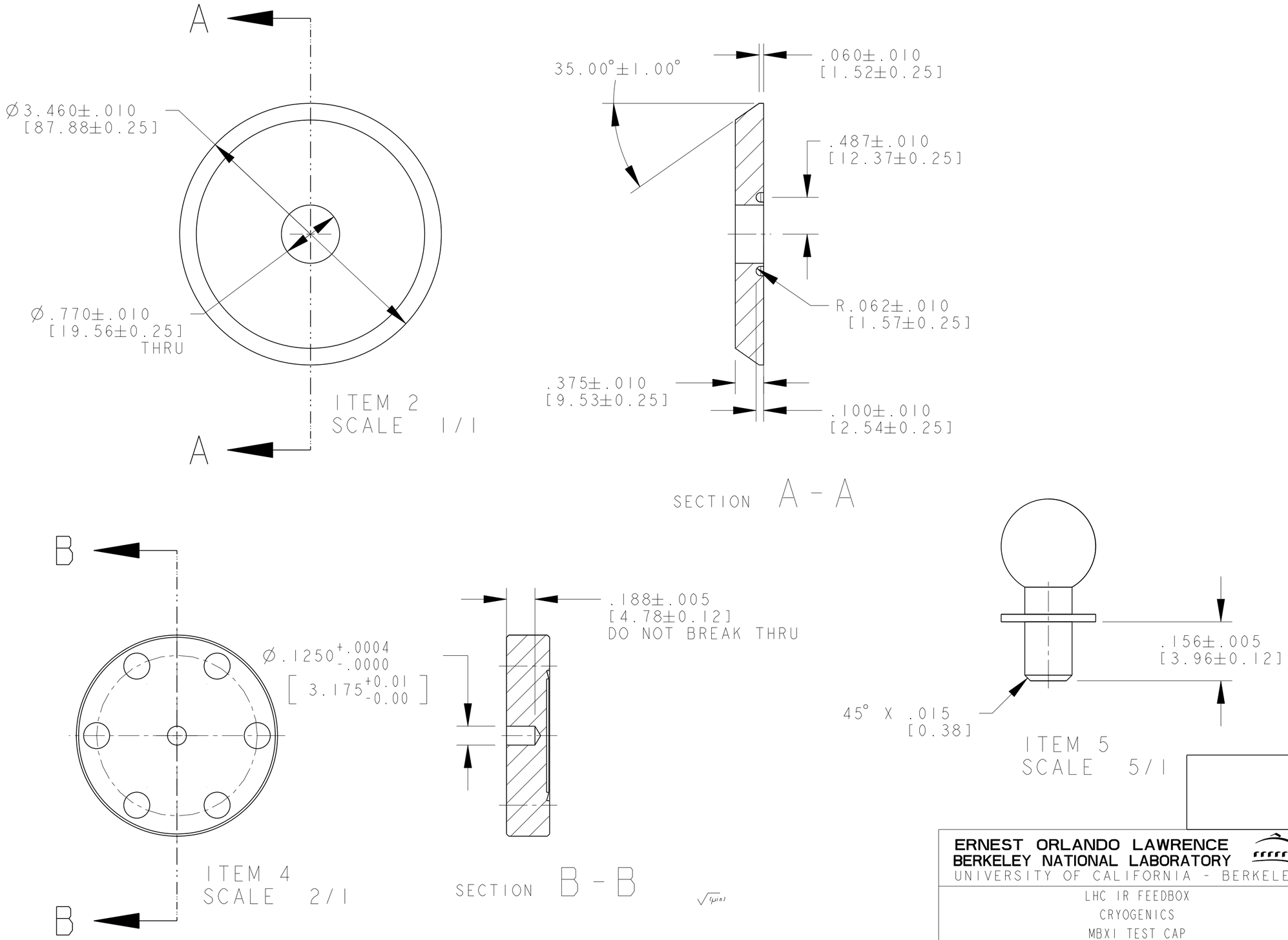

ERNEST ORLANDO LAWRENCE
BERKELEY NATIONAL LABORATORY
UNIVERSITY OF CALIFORNIA - BERKELEY

LHC IR FEEDBOX
CRYOGENICS
MBXI TEST CAP

MICROFILMED:	DWG. TYPE	SHOWN ON	SCALE: 1/2	DO NOT SCALE PRINTS
	ASSEM	-	SHEET 2 OF 3	
PATENT CLEAR:	DESIGN ACCT. NO.	CATEGORY CODE	DWG. NO. SIZE	REV.
	Z5LCE2	LH2003	25M9133	A

DWG. NO. 25M9133 SIZE A REV. SH. 2

Dwg. File: 25M913 Model File: 25M913

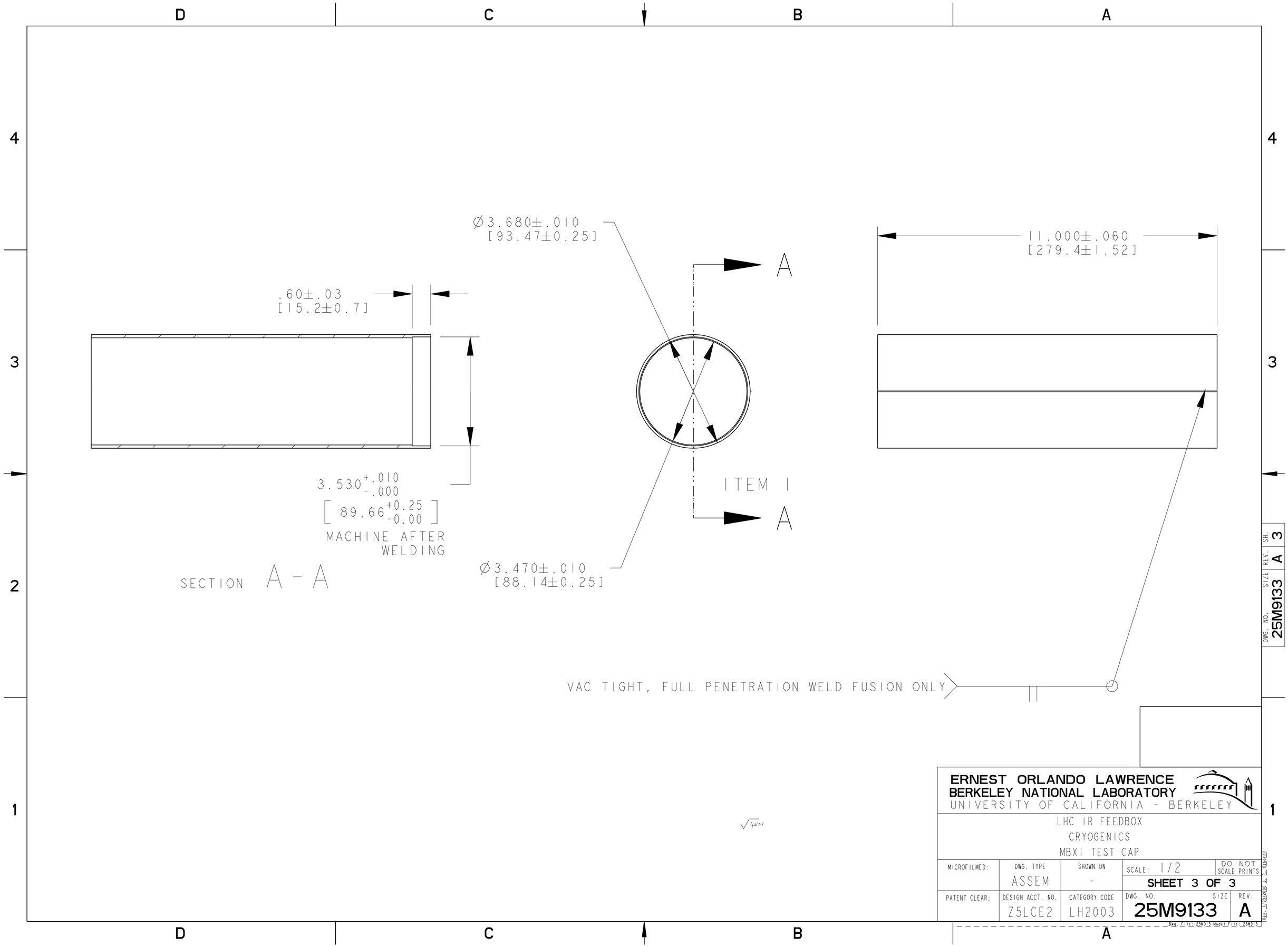

Ø3.680±.010
[93.47±0.25]
A
11.000±.060
[279.4±1.52]
.60±.03
[15.2±0.7]
3.530 +.010 -.000
[89.66 +0.25 -0.00]
MACHINE AFTER WELDING
ITEM 1
A
SECTION A - A
Ø3.470±.010
[88.14±0.25]
VAC TIGHT, FULL PENETRATION WELD FUSION ONLY
ERNEST ORLANDO LAWRENCE
BERKELEY NATIONAL LABORATORY
UNIVERSITY OF CALIFORNIA - BERKELEY
LHC IR FEEDBOX
CRYOGENICS
MBXI TEST CAP
MICROFILMED:
DWG. TYPE
ASSEM
SHOWN ON
-
SCALE: 1/2
DO NOT SCALE PRINTS
SHEET 3 OF 3
PATENT CLEAR:
DESIGN ACCT. NO.
Z5LCE2
CATEGORY CODE
LH2003
DWG. NO.
25M9133
SIZE
REV.
A
DWG. NO. 25M9133
SIZE A
REV. A
SH. 3