DWG. NO.	SIZE	REV.	SH.
25M9084	A	1	

ITEM	PART NO	REQD	DESCRIPTION	MATERIAL
3	251307		FLANGE, FNAL# 5520-MB-390033B, MODIFIED	-
2	-		1.5" PIPE, SCH 10	SS 304L
1	-		3" PIPE, SCH 10	SS 304L

NOTES: (UNLESS OTHERWISE SPECIFIED)

1. THIS IS A CRYOGENIC VACUUM COMPONENT.
2. CLEAN AND DEGREASE PARTS BEFORE WELDING.
3. STORE IN PLASTIC BAG MARKED WITH "25M908".
4. DIMENSIONS AND TOLERANCING PER ANSI Y14.5M-1982. UNITS ARE IN INCHES [mm] UNLESS OTHERWISE SPECIFIED.
5. USE OF SULFUR OR SILICONE BEARING OILS, LUBRICANTS, OR COOLANTS ARE STRICTLY PROHIBITED.
6. USE OF RESIN OR RUBBER BONDED ABRASIVES UNDER POWER IS STRICTLY PROHIBITED. USE VITREOUS BONDED ABRASIVES ONLY.
7. REMOVE ALL BURRS, REAM AND CLEAN ENDS.
8. PERFORM ACCEPTANCE TESTS PER APPLICABLE LBNL FABRICATION TRAVELER.
9. LEAK RATE NOT TO EXCEED 5E-10 STANDARD CUBLIC CENTIMETERS PER SECOND, HELIUM, AFTER 2X THERMAL SHOCKS TO LN TEMP.
10. WELD SHRINKAGE NOT ACCOUNTED FOR.

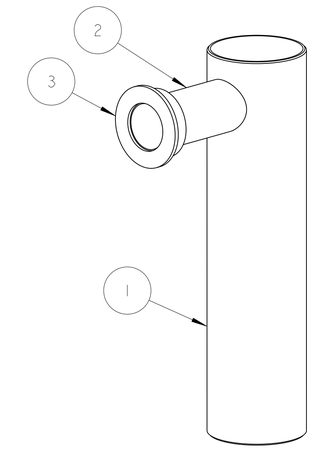

SCALE 3/8

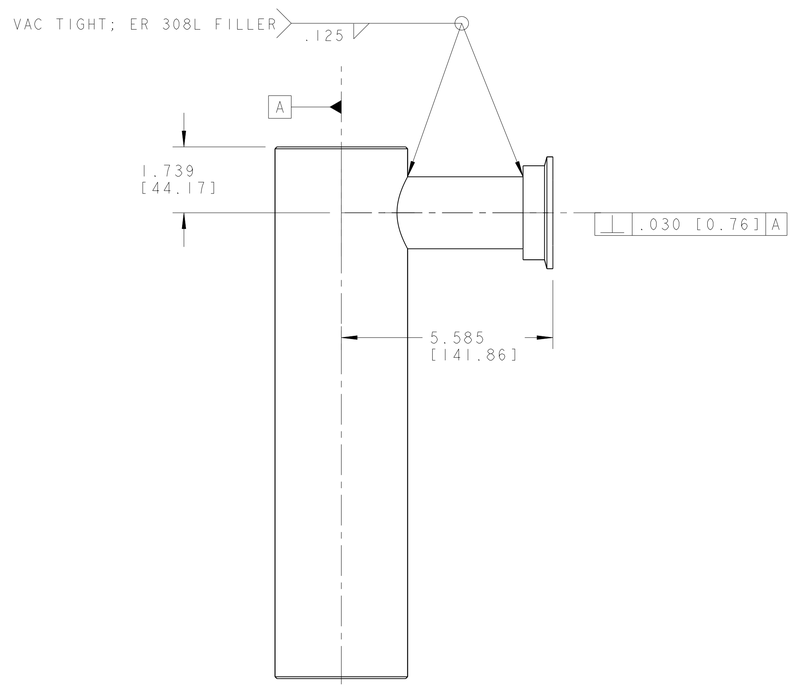

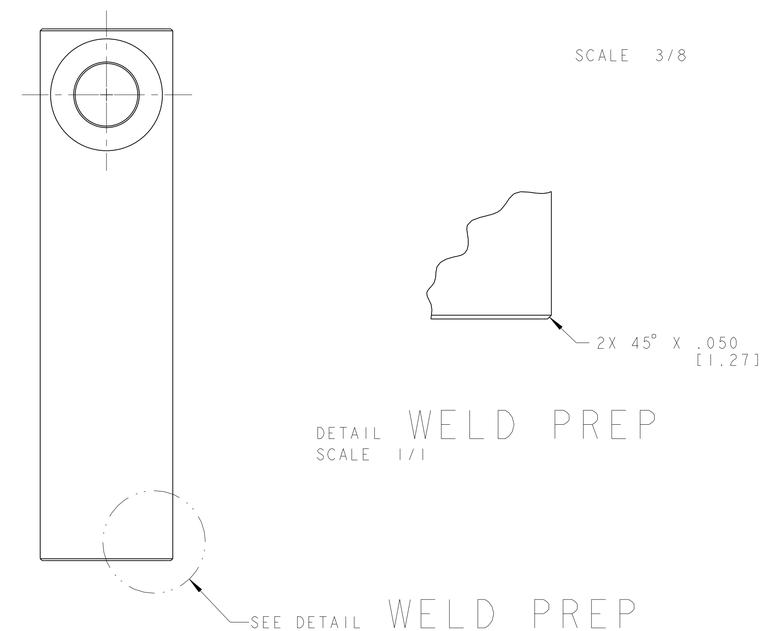

DETAIL WELD PREP
SCALE 1/1

REV	DWG	CHK	ZONE	DATE	CHANGES
A	RLM	JPZ		2/21/03	INITIAL RELEASE

UNLESS OTHERWISE SPECIFIED

TOLERANCES		
	X.X ± 0.1	FRAC. ± 1/64
	X.XX ± 0.03	Angles ± 1.00°
	X.XXX ± 0.010	FINISH 125 √ (µ-in)

DO NOT SCALE PRINT

THREADS ARE CLASS 2
CHAMFER ENDS OF ALL SCREW TREADS 30°
CUT ROUND, 1.5 THREAD RELIEF ON MACHINED THREADS
BREAK EDGES .016 MAX. ON MACHINED WORK
REMOVE BURRS, WELD SPLATTER & LOOSE SCALE
IN ACCORDANCE WITH ASME Y14.5M & B46.1

SHOP ORDERS

ACCT NO.	NO. REQD	SER NO.	-
DEL TO		DATE ISSD	-
		DATE REQD	-
SURFACE TREATMT	-		
IDENT METHOD	TAG		
PROJECT NUMBER	N/A		
PROJECT NAME	N/A		
DWG BY	S.Bartlett	DATE	05-Feb-03
CHK BY	R LA MANTIA	DATE	2/14/03
APR BY	J.Zbasnik	DATE	2/21/03

ERNEST ORLANDO LAWRENCE BERKELEY NATIONAL LABORATORY
UNIVERSITY OF CALIFORNIA - BERKELEY

LHC IR FEEDBOX
CRYOGENICS
MQX1 VERTICAL PIPE ASSEMBLY

MICROFILMED:	DWG. TYPE	SHOWN ON	SCALE: 1/2	DO NOT SCALE PRINTS
	ASSEM	-	SHEET 1 OF 2	
PATENT CLEAR:	DESIGN ACCT. NO.	CATEGORY CODE	DWG. NO.	SIZE / REV.
	Z5LCE2	LH2003	25M9084	A

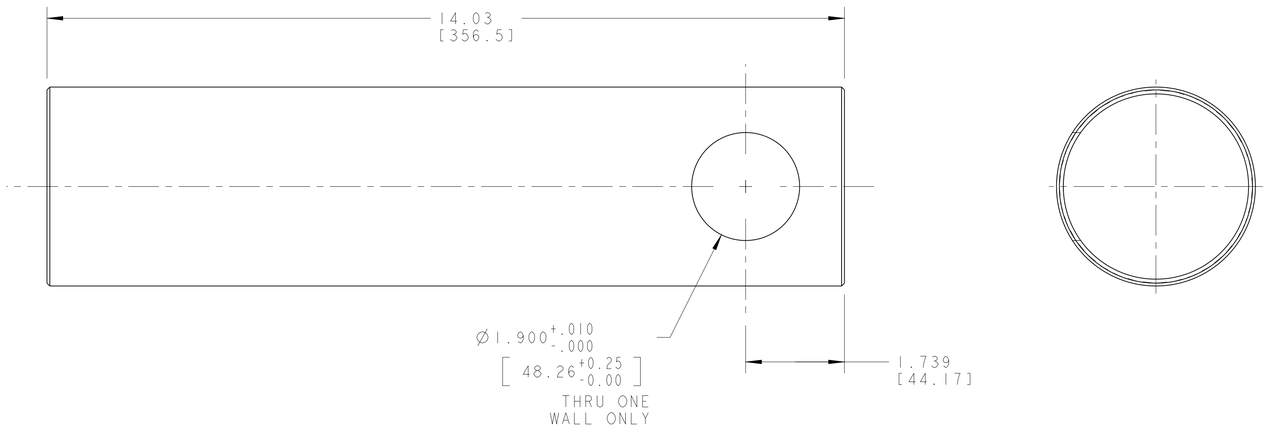

DETAIL ITEM 1

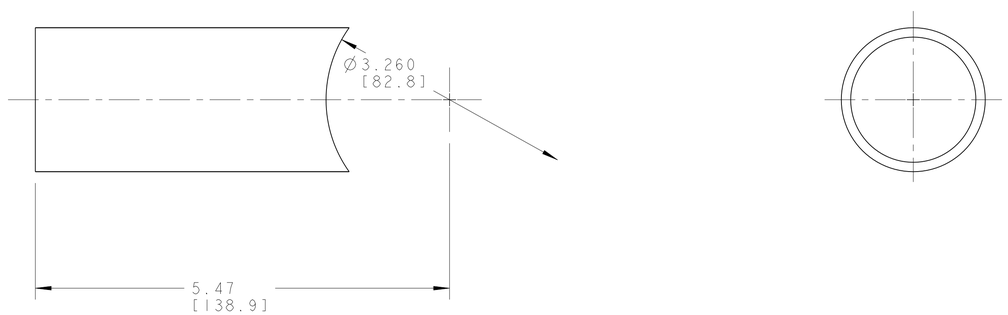

DETAIL ITEM 2

ERNEST ORLANDO LAWRENCE
BERKELEY NATIONAL LABORATORY
UNIVERSITY OF CALIFORNIA - BERKELEY

LHC IR FEEDBOX
CRYOGENICS
MQXI VERTICAL PIPE ASSEMBLY

MICROFILMED:	DWG. TYPE	SHOWN ON	SCALE: 1/2	DO NOT SCALE PRINTS
	ASSEM	-	SHEET 2 OF 2	
PATENT CLEAR:	DESIGN ACCT. NO.	CATEGORY CODE	DWG. NO.	SIZE / REV.
	Z5LCE2	LH2003	25M9084	A