| DESCRIPTION | MATERIAL | MAT. LOCATION |
|---|---|---|
| 600 AMP CONDUCTOR STIFFENER, SINGLE PAIR | NEMA G10 | - |

NOTES: (UNLESS OTHERWISE SPECIFIED)

1. THIS IS A CRYOGENIC VACUUM COMPONENT.
2. CLEANING PROCEDURE : PER VENDOR SPECIFICATION WITH LBNL APPROVAL.
3. PACKAGING AND STORAGE PROCEDURE OF THE COMPONENTS: PER VENDOR SPECIFICATION WITH LBNL APPROVAL.
4. DIMENSIONS AND TOLERANCING PER ANSI Y14.5M-1982. UNITS ARE IN INCHES [mm] UNLESS OTHERWISE SPECIFIED.
5. USE OF SULFUR OR SILICONE BEARING OILS, LUBRICANTS, OR COOLANTS ARE STRICTLY PROHIBITED.
6. USE OF RESIN OR RUBBER BONDED ABRASIVES UNDER POWER IS STRICTLY PROHIBITED. USE VITREOUS BONDED ABRASIVES ONLY.
7. VENDOR SUGGESTED CHANGES TO TOLERANCES TO FACILITATE FABRICATION OR ASSEMBLY; SUBECT TO LBNL APPROVAL.

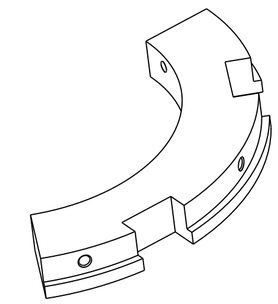

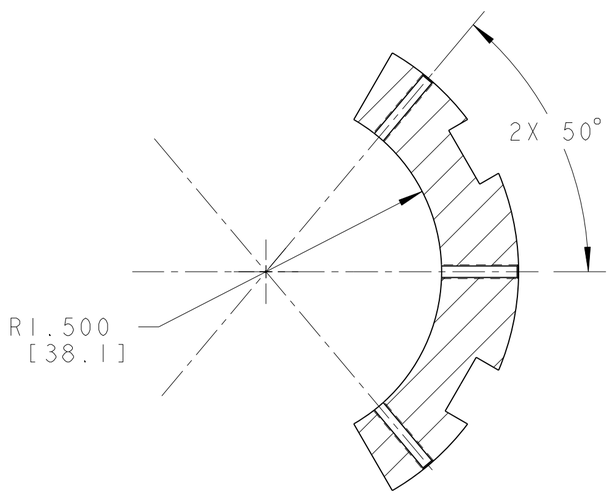


SECTION B - B

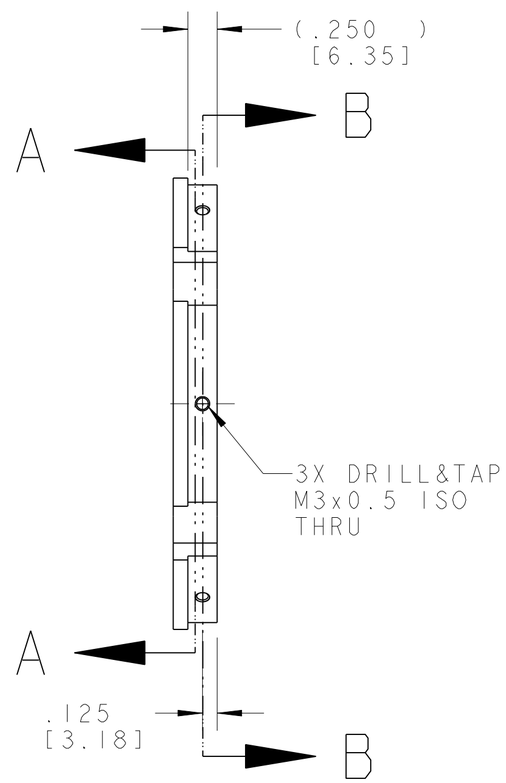


SCALE 1/1

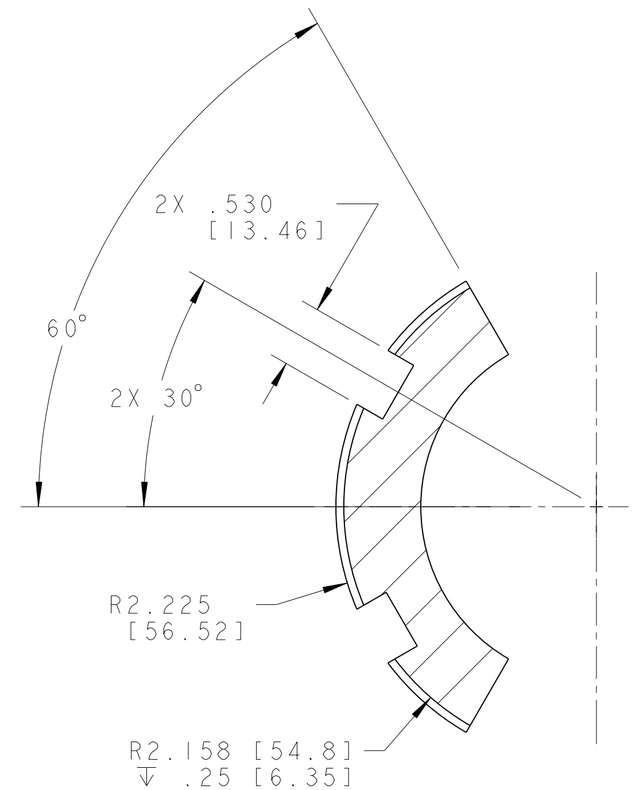


SECTION A - A

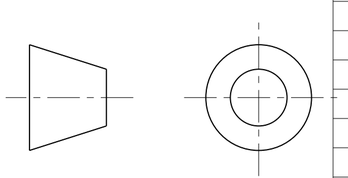

THIRD ANGLE PROJECTION

| REV | DWG | CHK | ZONE | DATE | CHANGES |
|---|---|---|---|---|---|
| A | ARH | DPO | | 9/26/02 | INITIAL RELEASE |

UNLESS OTHERWISE SPECIFIED

| TOLERANCES | | |
|---|---|---|
| | X.X ± 0.1 | FRAC. ± 1/64 |
| | X.XX ± 0.03 | Angles ± 1.00° |
| | X.XXX ± 0.010 | FINISH 125 √(µin) |

DO NOT SCALE PRINT

THREADS ARE CLASS 2
CHAMFER ENDS OF ALL SCREW TREADS 30°
CUT ROUND, 1.5 THREAD RELIEF ON MACHINED THREADS
BREAK EDGES .016 MAX. ON MACHINED WORK
REMOVE BURRS, WELD SPLATTER & LOOSE SCALE
IN ACCORDANCE WITH ASME Y14.5M & B46.1

**SHOP ORDERS**

| | | | |
|---|---|---|---|
| SER NO. | - | | |
| ACCT NO. | | NO. REQD | DATE ISSD - |
| DEL TO | | | DATE REQD - |
| SURFACE TREATMT | - | | |
| IDENT METHOD | TAG | | |
| PROJECT NUMBER | N/A | | |
| PROJECT NAME | N/A | | |
| DWG BY | S.Bartlett | DATE | 04-Sep-02 |
| CHK BY | D.OSHATZ | DATE | 26-Sep-02 |
| APR BY | D.OSHATZ | DATE | 26-Sep-02 |

ERNEST ORLANDO LAWRENCE BERKELEY NATIONAL LABORATORY
UNIVERSITY OF CALIFORNIA - BERKELEY

LHC IR FEEDBOX
ELECTRICAL
600 AMP CONDUCTOR STIFFENER ASSEMBLY, SINGLE PAIR

| MICROFILMED: | DWG. TYPE | SHOWN ON | SCALE: 1/1 | DO NOT SCALE PRINTS |
|---|---|---|---|---|
| | PART | - | SHEET 1 OF 1 | |
| PATENT CLEAR: | DESIGN ACCT. NO. | CATEGORY CODE | DWG. NO. | SIZE / REV. |
| | Z5LCE3 | LH2004 | 25M9023 | A |

DWG. NO. 25M9023 SIZE A REV. SH. 1

Rev. 11/30/2000 by E. Wakerly

Dwg. File: 25M902 Model File: 25M902