DWG. NO.	SIZE	REV.	SH.
25M8634	A	1	

ITEM	PART NO	REQD	DESCRIPTION	MATERIAL
8	-	12	WASHER, M6	SS
7	-	2	NUT, M6	SS 18-8
6	-	3	SCH, M6X1, 35LG, SILVER PLATED	SS 18-8
5	-	10	SCH, M6X1, 25LG, SILVER PLATED	SS 18-8
4	25M809	1	XB THRUST BRACKET, BOTTOM	304L SS
3	25M805	1	XB THRUST BRACKET, CLAMP PLATE	304L SS
2	25M804	1	XB THRUST BRACKET, ANCHOR PLATE	304L SS
1	25M803	1	XB THRUST BRACKET, TOP	304L SS

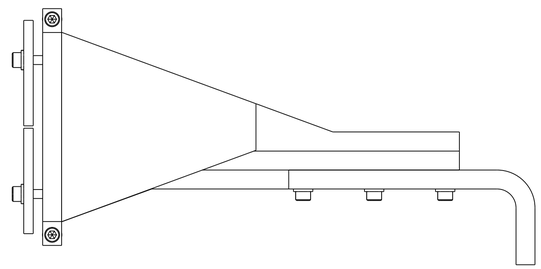

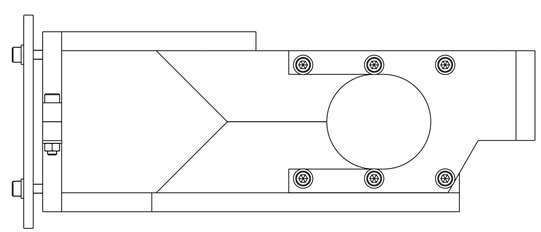

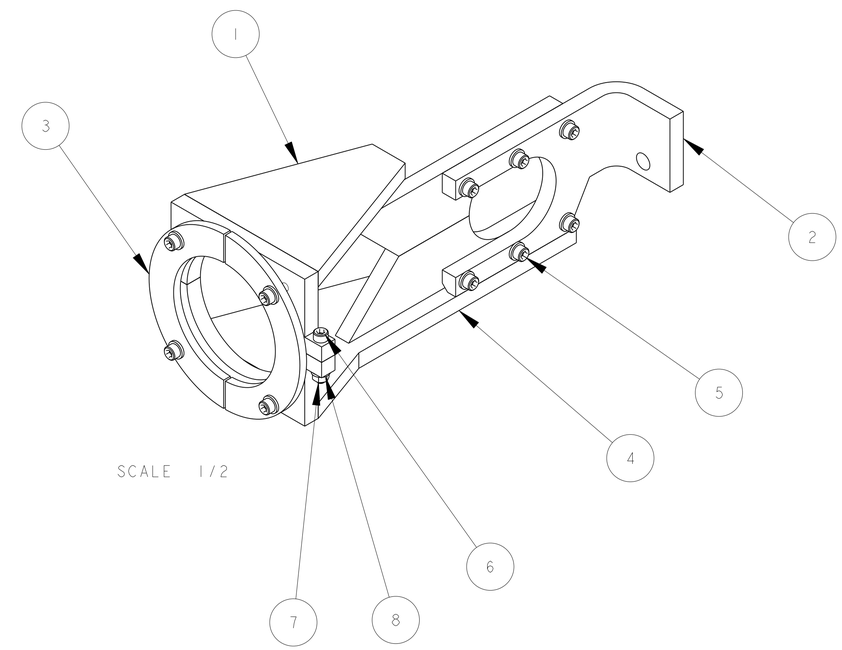

SCALE 1/2

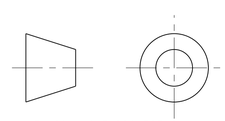

THIRD ANGLE PROJECTION

REV	DWG	CHK	ZONE	DATE	CHANGES
A	RLM	DPO		10-4-02	INITIAL RELEASE

UNLESS OTHERWISE SPECIFIED

TOLERANCES: X.X ± 0.1 FRAC. ± 1/64; X.XX ± 0.02 Angles ± 1.00°; X.XXX ± 0.005 FINISH 125 √ (Ra)

DO NOT SCALE PRINT

THREADS ARE CLASS 2
CHAMFER ENDS OF ALL SCREW TREADS 30°
CUT ROUND, 1.5 THREAD RELIEF ON MACHINED THREADS
BREAK EDGES .016 MAX. ON MACHINED WORK
REMOVE BURRS, WELD SPLATTER & LOOSE SCALE
IN ACCORDANCE WITH ASME Y14.5M & B46.1

SHOP ORDERS

ACCT NO.	NO. REQD	SER NO.	-
DEL TO		DATE ISSD	-
SURFACE TREATMT	-	DATE REQD	-
IDENT METHOD	TAG		
PROJECT NUMBER	N/A		
PROJECT NAME	N/A		
DWG BY	R LA MANTIA	DATE	12-Aug-02
CHK BY	M HOFF	DATE	23-Aug-02
APR BY	D OSHATZ	DATE	23-Aug-02

ERNEST ORLANDO LAWRENCE BERKELEY NATIONAL LABORATORY
UNIVERSITY OF CALIFORNIA - BERKELEY

LHC IR FEEDBOX
CRYOGENICS
XB BELLOWS SUPPORT BRACKET

MICROFILMED:	DWG. TYPE	SHOWN ON	SCALE: 1/2	DO NOT SCALE PRINTS
	ASSEM	-	SHEET 1 OF 1	
PATENT CLEAR:	DESIGN ACCT. NO.	CATEGORY CODE	DWG. NO.	SIZE / REV.
	Z5LCE3	LH2003	25M8634	A

Dwg. File: Z:\MBRT\Work\Files\25M8634