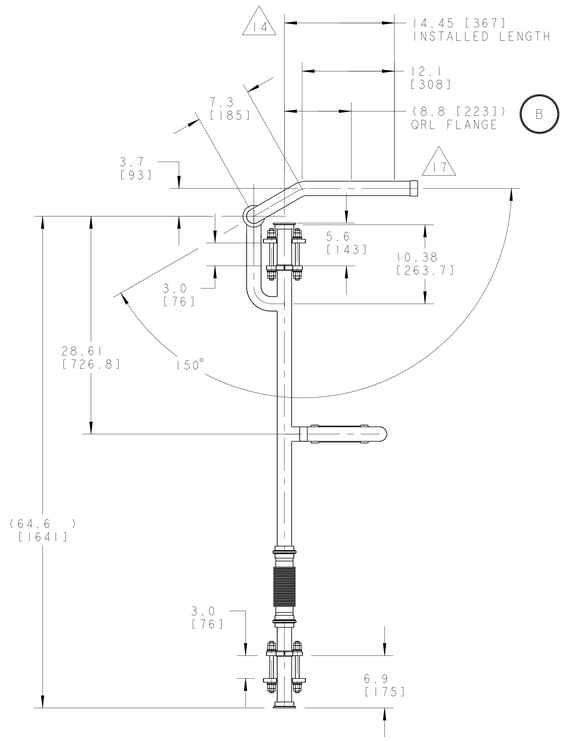

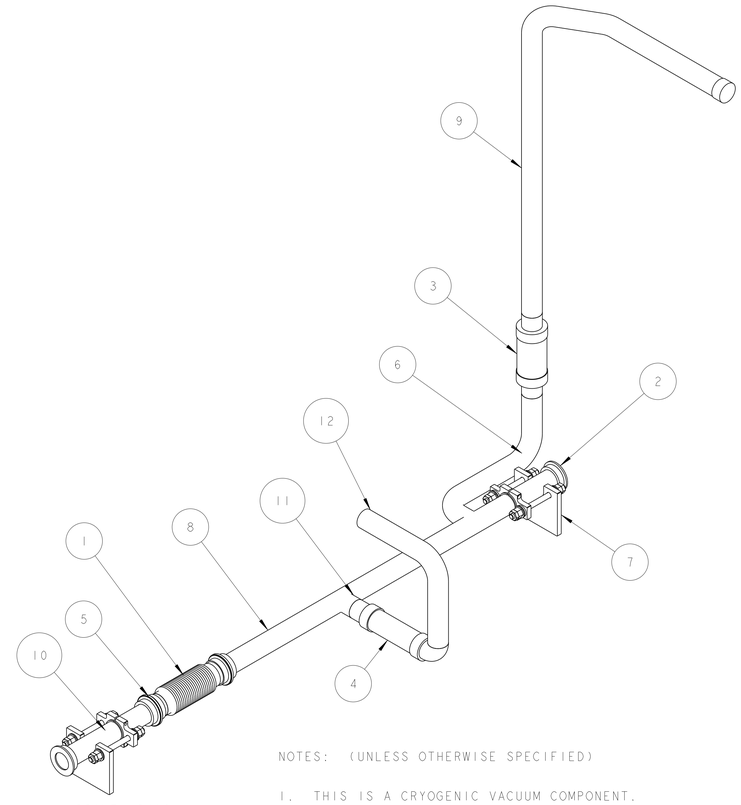

SCALE 3/16

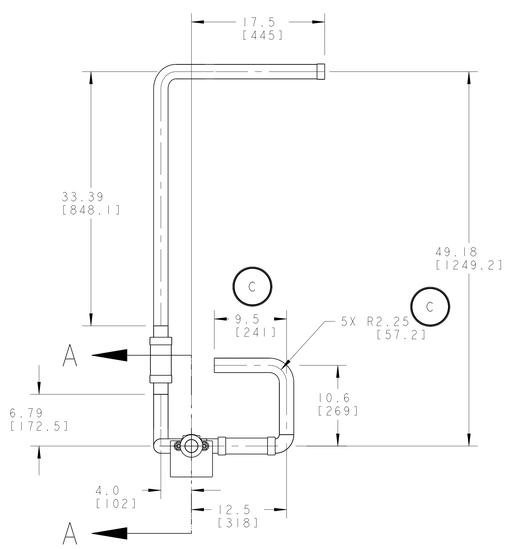

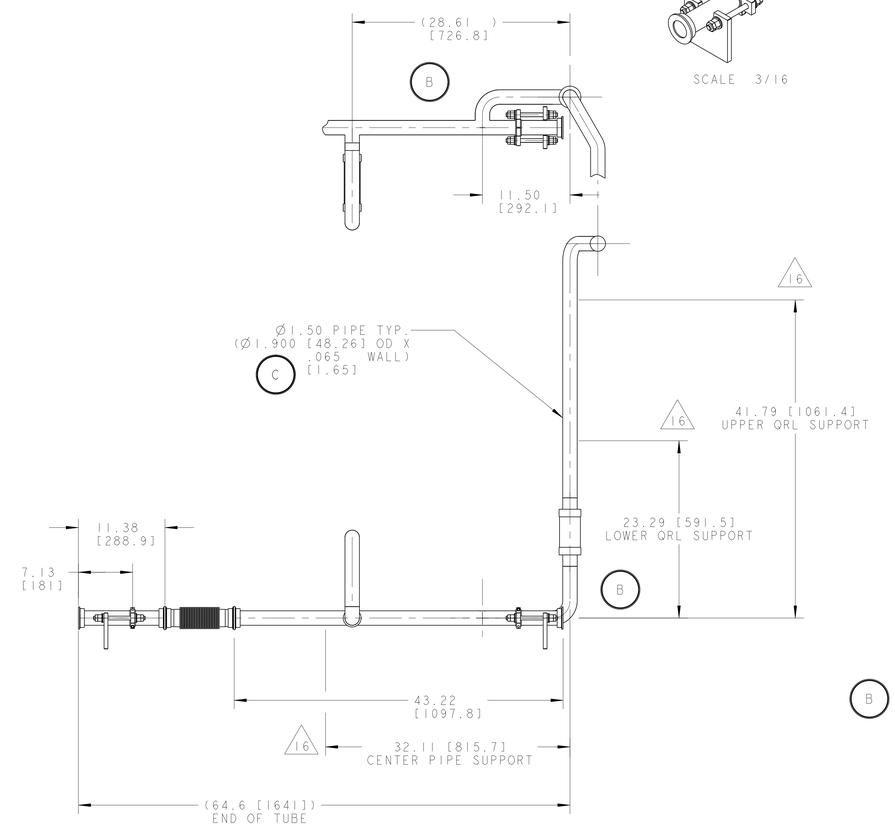

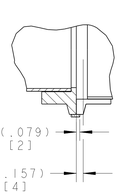

DETAIL B
SCALE 3/4

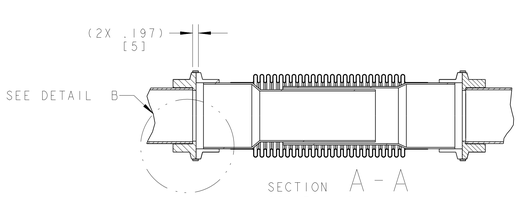

SECTION A - A
SCALE 1/2

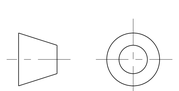

THIRD ANGLE PROJECTION

NOTES: (UNLESS OTHERWISE SPECIFIED)

1. THIS IS A CRYOGENIC VACUUM COMPONENT.
2. WELDING PROCEDURE: PER VENDOR SPECIFICATION WITH LBNL APPROVAL.
3. CLEANING PROCEDURE : PER VENDOR SPECIFICATION WITH LBNL APPROVAL.
4. PACKAGING AND STORAGE PROCEDURE OF THE COMPONENTS: PER VENDOR SPECIFICATION WITH LBNL APPROVAL.
5. DIMENSIONS AND TOLERANCING PER ANSI Y14.5M-1982. UNITS ARE IN INCHES [mm] UNLESS OTHERWISE SPECIFIED.
6. USE OF SULFUR OR SILICONE BEARING OILS, LUBRICANTS, OR COOLANTS ARE STRICTLY PROHIBITED.
7. USE OF RESIN OR RUBBER BONDED ABRASIVES UNDER POWER IS STRICTLY PROHIBITED. USE VITREOUS BONDED ABRASIVES ONLY.
8. VENDOR SUGGESTED CHANGES TO WELD PREPS; SUBJECT TO LBNL APPROVAL.
9. FITTINGS MAY BE USED IN PLACE OF BENDS; SUBJECT TO LBNL APPROVAL.
10. VENDOR SUGGESTED CHANGES TO TOLERANCES TO FACILITATE FABRICATION OR ASSEMBLY; SUBECT TO LBNL APPROVAL.
11. REMOVE ALL THE BURRS AND REAM THE ENDS FOR CIRCULARITY AND CLEAN ENDS.
12. TUBE END SURFACE MUST BE PERPENDICULAR TO THE TUBE AXIS WITHIN +/-.010.
13. PERFORM ACCEPTANCE TESTS PER LBNL SPECIFICATION M989.
14. A MARK DESIGNATING THE INSTALLED LENGTH WILL BE UTILIZED DURING FINAL INSTALLATION OF THE FEEDBOX ASSEMBLY. MARK, SCRIBE OR ETCH THIS LOCATION IN A PERMANENT MANNER, SUBJECT TO LBNL APPROVAL, TO AN ACCURACY OF ±0.063".
15. PROVIDE A MINIMUM LENGTH OF 4.0" OF STRAIGHT, SMOOTH PIPE ON THE INDICATED SIDE OF THE INSTALLED LENGTH MARK FOR PIPE WELDING DURING FINAL INSTALLATION OF THE FEEDBOX ASSEMBLY.
16. PIPE MUST BE STRAIGHT AND SMOOTH (NO BUMPS) FOR 1.5" ON EITHER SIDE OF THE CENTER-PLANE OF THE SUPPORT.
17. CAP BOTH ENDS OF PIPE TO FACILITATE ACCEPTANCE TESTS. (B)

	ITEM	PART NO	REQD	DESCRIPTION	MATERIAL
	12	-	1	PIPE, PER ASTM A312	SS 304L
	11	-	1	PIPE, PER ASTM A312	SS 304L
	10	-	1	PIPE, PER ASTM A312	SS 304L
B	9	-	1	PIPE, PER ASTM A312	SS 304L
B	8	-	1	PIPE, PER ASTM A312	SS 304L
B	7	25H406	2	THRUST SUPPORT, BUS DUCT	SS 304L
	6	-	1	PIPE, PER ASTM A312	SS 304L
B	5	-	2	WELD RING, ID 75mm, FNAL SUPPLIED	SS 304L
	4	-	1	BRAIDED FLEX HOSE, 1 1/2" ID X 5.5" LL	SS 300 SERIES
	3	-	1	BRAIDED FLEX HOSE, 1 1/2" ID X 4" LL	SS 300 SERIES
B	2	251307	4	FLANGE, FNAL# 5520-MB-390033B, MODIFIED	-
	1	251312	1	BELLOWS, FNAL # 5520-MC-390061	-

REV	DWG	CHK	ZONE	DATE	CHANGES
C	RLM	JPZ		6/9/03	JUMPER DIM 9.5 WAS 6.5; ALL BEND RADII NOW 2.25; (WERE R3.5, R4 AND R1.9); PIPE CALL OUT
B	RLM	DPO		11-6-02	CORR DESCR FOR FLEX HOSE SIZE; CHANGED DESCRIPTION CALLOUT FOR BOM ITEM 5 & 7-9; REMOVED WELD CALLOUT, DELETED ORB WELD CLEARANCE CALLOUT, ADDED QRL FLANGE CALLOUT; ADDED PARTIAL VIEW, REVISED DWG NOTES 13, 16 & 17.
A	ARH	DPO		9/19/02	INITIAL RELEASE

UNLESS OTHERWISE SPECIFIED
TOLERANCES: X.X ± 0.1 | FRAC. ± 1/64 | X.XX ± 0.03 | Angles ± 1.00° | X.XXX ± 0.010 | FINISH 125 √Sym
DO NOT SCALE PRINT
THREADS ARE CLASS 2
CHAMFER ENDS OF ALL SCREW THREADS 30°
CUT ROUND, 1.5 THREAD RELIEF ON MACHINED THREADS
BREAK EDGES .016 MAX. ON MACHINED WORK
REMOVE BURRS, WELD SPLATTER & LOOSE SCALE
IN ACCORDANCE WITH ASME Y14.5M & B46.1

SHOP ORDERS
ACCT NO. | NO. REQD | DATE ISSD | DATE REQD
SEL NO. | DATE
SURFACE TREATMT
IDENT METHOD TAG
PROJECT NUMBER N/A
PROJECT NAME N/A
DWG BY KNOLLS DATE 13-Aug-02
CHK BY ZBASNIK, OSHATZ DATE 17-AUG-02
APP BY ZBASNIK, OSHATZ DATE 17-AUG-02

ERNEST ORLANDO LAWRENCE BERKELEY NATIONAL LABORATORY
UNIVERSITY OF CALIFORNIA - BERKELEY

LHC IR FEEDBOX
CRYOGENICS
PIPE WELDMENT, LD3/CROSSOVER

MICROFILMED: | DWG. TYPE: ASSEM | SHOWN ON: - | SCALE: ~1/8 | SHEET 1 OF 1
PATENT CLEAR: | DESIGN ACCT. NO.: Z5LCE2 | CATEGORY CODE: LH2003 | DWG. NO.: 25M8586 | SIZE: C | REV.:

DWG. NO. 25M8586 C 1