NOTES: (UNLESS OTHERWISE SPECIFIED)

1. THIS IS A CRYOGENIC VACUUM COMPONENT.
2. INSULATED BUS BARS (4) AND CORRECTOR LEADS (24) ARE NOT SHOWN.
3. 304L BACKING STRIPS TO BE USED ON ELBOW WELDS.
4. LIMIT TEMPERATURE OF CLOSEOUT WELDING BY STAGGERED 1" LONG SKIP WELD; COOL TO ROOM TEMPERATURE WITH "COOL GUN" OR EQUIVALENT BETWEEN PASSES.
5. DIMENSIONS AND TOLERANCING PER ANSI Y14.5M-1982. UNITS ARE IN INCHES [mm] UNLESS OTHERWISE SPECIFIED.
6. USE OF SULFUR OR SILICONE BEARING OILS, LUBRICANTS, OR COOLANTS ARE STRICTLY PROHIBITED.
7. USE OF RESIN OR RUBBER BONDED ABRASIVES UNDER POWER IS STRICTLY PROHIBITED. USE VITREOUS BONDED ABRASIVES ONLY.
8. PURGE BOTH SIDES OF ITEM 1 WITH DRY NITROGEN AND CAP FOR SHIPMENT.
9. SEAL COMPLETED ASSEMBLY IN 4 MIL POLY TUBING AND MARK WITH "25M857".
10. PERFORM ACCEPTANCE TESTS PER APPLICABLE LBNL FABRICATION TRAVELER.
11. INCLUDE A COPY OF THE FABRICATION TRAVELER IN THE ASSEMBLY SHIPPING CRATE. TRAVELER TO BE PACKAGED IN A WATERPROOF PLASTIC CONTAINER.
12. ITEMS 3 & 9 TO BE REMOVED FOR INSTALLATION TO DFBX LIQUID HELIUM TANK. ITEMS 6 AND 13 TO BE TEMPORARILY REMOVED FOR SPIDER INSTALLATION.
13. ITEM 2, 6 & 11 TO BE REMOVED FOR INSTALLATION AT CERN.
14. ITEM 2 TO BE REMOVED BY GRINDING WELD. REMOVE MINIMUM MATERIAL.

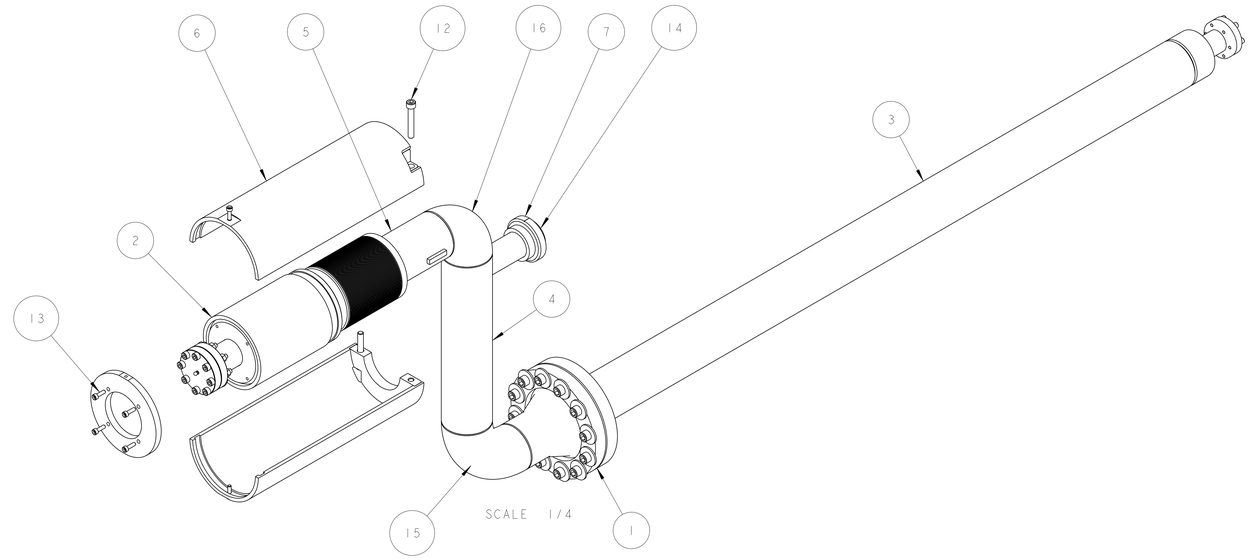

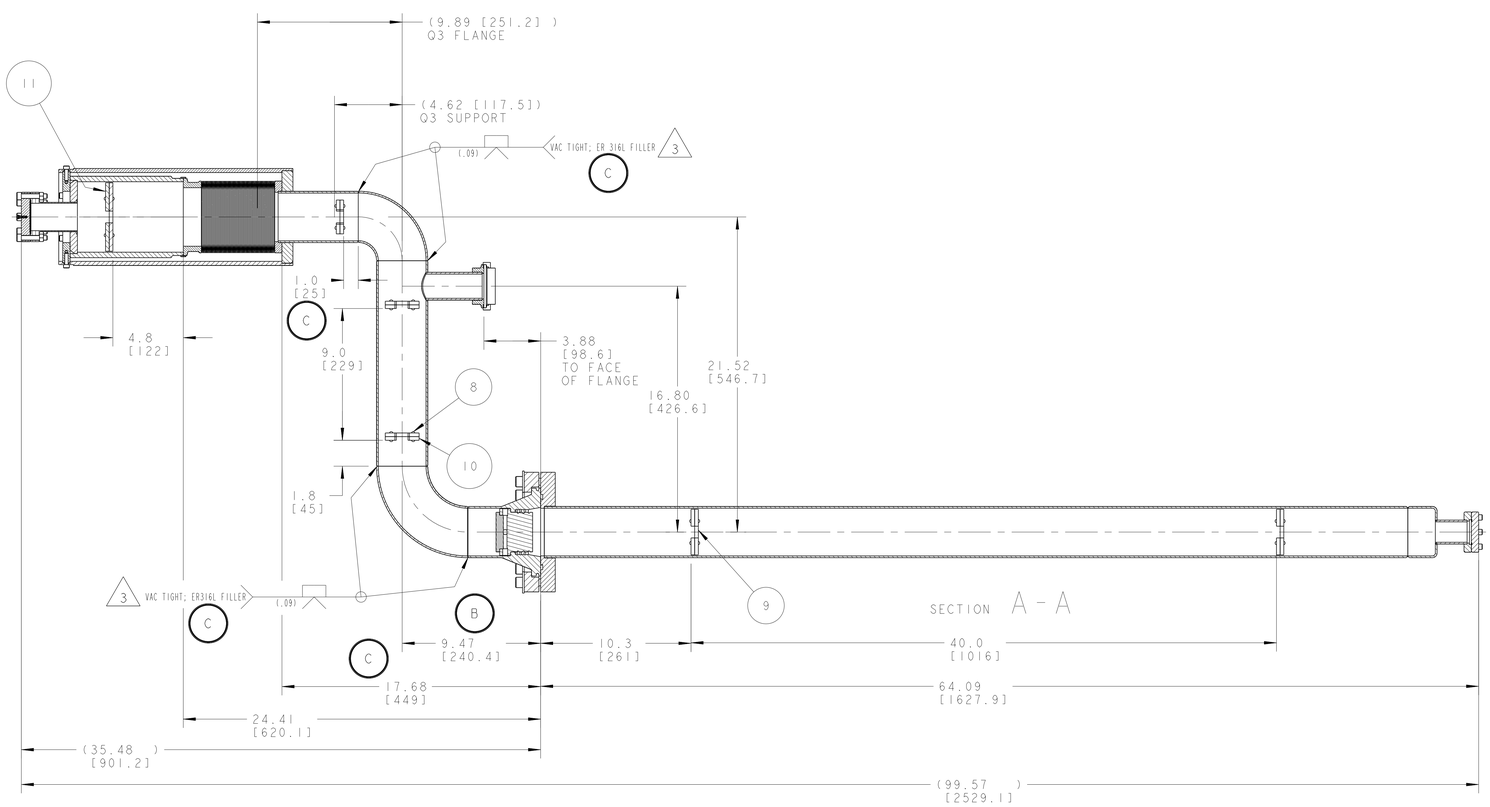

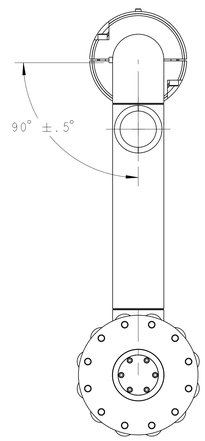

ITEM	PART NO	REQD	DESCRIPTION	MATERIAL
16	-	1	PIPE, 3", SCHEDULE 10, 90° ELBOW, SHORT	SS 304L
15	-	1	PIPE, 3", 90 ELBOW, LONG	SS 304L
14	-	1	FLANGE, BLANK, HELICOFLEX T300KF75	SS 300 SERIES
13	-	6	SHCS, M6, 20LG., McMASTER #91292A137	SS 18-8
12	-	2	SHCS, M10, 65LG, McMASTER #91292A251	SS 18-8
11	25M956	2	SPACER, TEMP, LARGE	NEMA G10
10	25M937	6	SPACER, BUS DUCT	NEMA G10
9	25M955	4	SPACER, TEMP, SMALL	DELRIN
8	-	24	RIVET, ROUND HD, Ø.125, .75LG, McMASTER #97482A181	ALUMINUM
7	-	1	GARLOCK HELICOFLEX PART # 300 A 75, SEAL	-
6	25M957	1	MQXI RESTRAINT ASSEMBLY	-
5	25M907	1	MQXI HORIZONTAL PIPE ASSEMBLY	-
4	25M908	1	MQXI VERTICAL PIPE ASSEMBLY	-
3	25M951	1	MQXI CABLE PROTECTION ASSEMBLY	-
2	25M950	1	MQXZ TEST CAP ASSEMBLY	-
1	25H400	1	LAMBDA PLUG ASSY, MQXI	-

REV	DWG	CHK	ZONE	DATE	CHANGES
C	RLM	JPZ		6/23/03	1.0 WAS 3.8; 316L FILLER WAS 308L FILLER; NEW DIM 17.68 TO BELLOWS SHOULDER.
B	RLM	JPZ		2/13/03	9.47 WAS 9.51
A	ARH	DPO		9/19/02	INITIAL RELEASE

THIRD ANGLE PROJECTION

UNLESS OTHERWISE SPECIFIED
TOLERANCES: X.X ± 0.1 FRAC. ± 1/64; X.XX ± 0.03 Angles ± 1.00°; X.XXX ± 0.010 FINISH 125 √(μin)
DO NOT SCALE PRINT
THREADS ARE CLASS 2.
CHAMFER ENDS OF ALL SCREW THREADS 30°
CUT ROUND, 1.5 THREAD RELIEF ON MACHINED THREADS
BREAK EDGES .015 MAX. ON MACHINED WORK
REMOVE BURRS, WELD SPLATTER & LOOSE SCALE
IN ACCORDANCE WITH ASME Y14.5M & B46.1

SHOP ORDERS
ACCT NO. | NO. REQD | SER NO. | DATE ISSD | DATE REQD
REL TO | SURFACE TREATMT | IDENT METHOD TAG | PROJECT NUMBER N/A | PROJECT NAME N/A
DWN BY KNOLLS DATE 09-Aug-02
CHK BY ZBASNIK, OSHATZ DATE 16-AUG-02
APP BY ZBASNIK, OSHATZ DATE 16-AUG-02

ERNEST ORLANDO LAWRENCE BERKELEY NATIONAL LABORATORY
UNIVERSITY OF CALIFORNIA . BERKELEY

LHC IR FEEDBOX
CRYOGENICS
PIPE WELDMENT, MQXI

MICROFILMED: | DWG. TYPE ASSEM | SHOWN ON - | SCALE: 1/4 | DO NOT SCALE PRINTS
SHEET 1 OF 1
PATENT CLEAR: | DESIGN ACCT. NO. Z5LCE2 | CATEGORY CODE LH2003 | DWG. NO. 25M8576 | SIZE C | REV.

DWG. NO. 25M8576 | C | 1