DESCRIPTION	MATERIAL	MAT. LOCATION
PLATE OR ROD	304L SS	-

NOTES: (UNLESS OTHERWISE SPECIFIED)

1. THIS IS A CRYOGENIC VACUUM COMPONENT.
2. CLEANING PROCEDURE : PER VENDOR SPECIFICATION WITH LBNL APPROVAL.
3. PACKAGING AND STORAGE PROCEDURE OF THE COMPONENTS: PER VENDOR SPCIFICATION WITH LBNL APPROVAL.
4. DIMENSIONS AND TOLERANCING PER ANSI Y14.5M-1982. UNITS ARE IN INCHES UNLESS OTHERWISE SPECIFIED.
5. USE OF SULFUR OR SILICONE BEARING OILS, LUBRICANTS, OR COOLANTS ARE STRICTLY PROHIBITED.
6. USE OF RESIN OR RUBBER BONDED ABRASIVES UNDER POWER IS STRICTLY PROHIBITED. USE VITREOUS BONDED ABRASIVES ONLY.

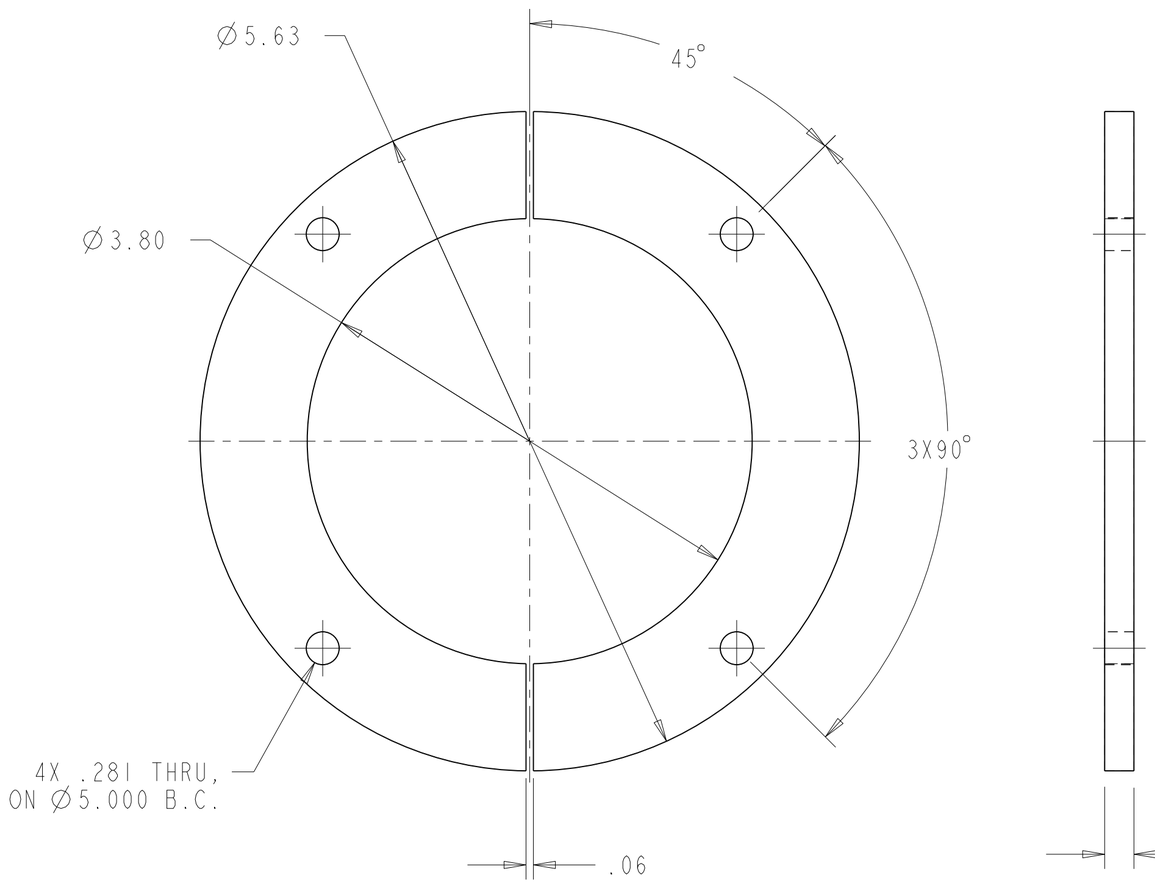

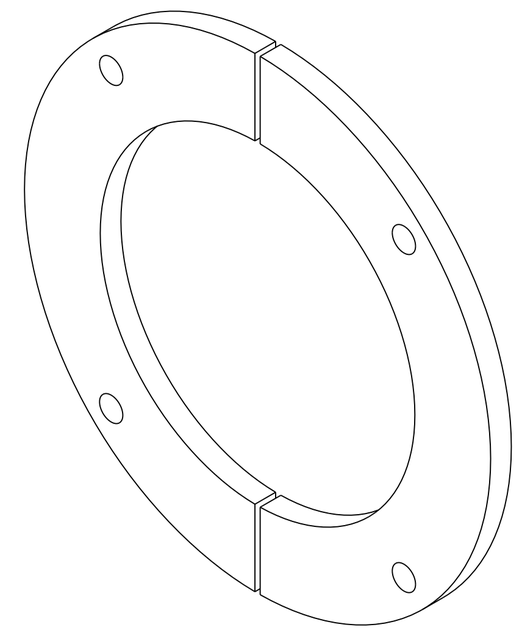

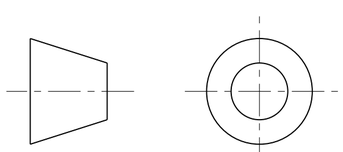

THIRD ANGLE PROJECTION

REV	DWG	CHK	ZONE	DATE	CHANGES
A	RLM	DPO		10-4-02	INITIAL RELEASE

UNLESS OTHERWISE SPECIFIED

TOLERANCES: X.X ± 0.1 | FRAC. ± 1/64 | X.XX ± 0.02 | Angles ± 1.00° | X.XXX ± 0.005 | FINISH 125 √ (µin)

DO NOT SCALE PRINT

THREADS ARE CLASS 2
CHAMFER ENDS OF ALL SCREW TREADS 30°
CUT ROUND, 1.5 THREAD RELIEF ON MACHINED THREADS
BREAK EDGES .016 MAX. ON MACHINED WORK
REMOVE BURRS, WELD SPLATTER & LOOSE SCALE
IN ACCORDANCE WITH ASME Y14.5M & B46.1

SHOP ORDERS

ACCT NO.	NO. REQD	SER NO.	-
DEL TO		DATE ISSD	-
SURFACE TREATMT	-	DATE REQD	-
IDENT METHOD	TAG		
PROJECT NUMBER	N/A	N/A (logo)	
PROJECT NAME	N/A		
DWG BY	R LA MANTIA	DATE	16-Aug-02
CHK BY	M HOFF	DATE	23-Aug-02
APR BY	D OSHATZ	DATE	23-Aug-02

ERNEST ORLANDO LAWRENCE BERKELEY NATIONAL LABORATORY
UNIVERSITY OF CALIFORNIA - BERKELEY

LHC IR FEEDBOX
CRYOGENICS
XB THRUST BRACKET, CLAMP PLATE

MICROFILMED:	DWG. TYPE	SHOWN ON	SCALE: 1.000	DO NOT SCALE PRINTS
	PART	-	SHEET 1 OF 1	
PATENT CLEAR:	DESIGN ACCT. NO.	CATEGORY CODE	DWG. NO.	SIZE / REV.
	Z5LCE3	LH2003	25M8053	A

Dwg. File: 25M805 Model File: 25M805

Rev. 17-Mar-1999 J. K. Osborn

DWG. NO. 25M8053 SIZE A REV. 1 SH.