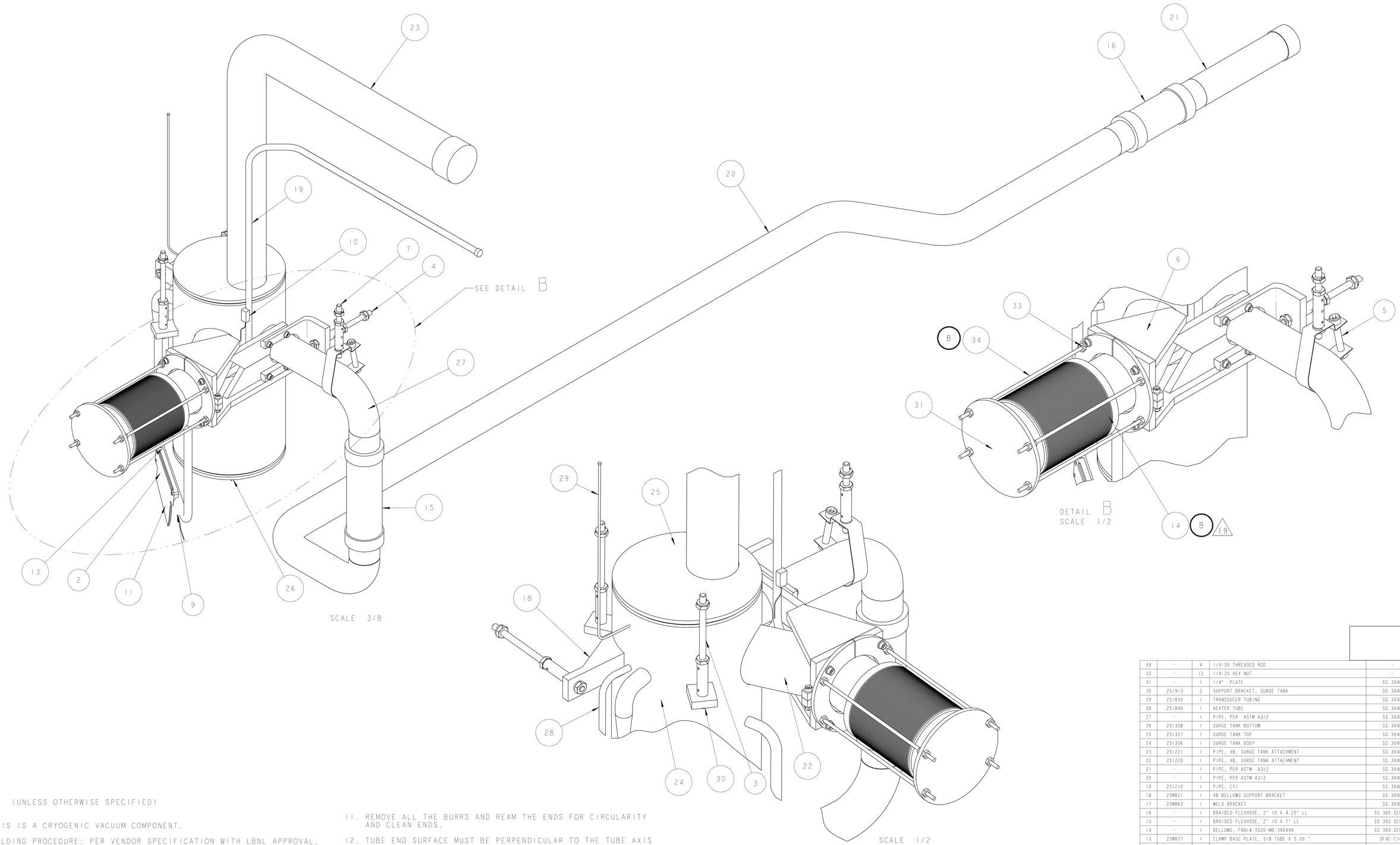

NOTES: (UNLESS OTHERWISE SPECIFIED)

1. THIS IS A CRYOGENIC VACUUM COMPONENT.
2. WELDING PROCEDURE: PER VENDOR SPECIFICATION WITH LBNL APPROVAL.
3. CLEANING PROCEDURE : PER VENDOR SPECIFICATION WITH LBNL APPROVAL.
4. PACKAGING AND STORAGE PROCEDURE OF THE COMPONENTS: PER VENDOR SPECIFICATION WITH LBNL APPROVAL.
5. DIMENSIONS AND TOLERANCING PER ANSI Y14.5M-1982. UNITS ARE IN INCHES [mm] UNLESS OTHERWISE SPECIFIED.
6. USE OF SULFUR OR SILICONE BEARING OILS, LUBRICANTS, OR COOLANTS ARE STRICTLY PROHIBITED.
7. USE OF RESIN OR RUBBER BONDED ABRASIVES UNDER POWER IS STRICTLY PROHIBITED. USE VITREOUS BONDED ABRASIVES ONLY.
8. VENDOR SUGGESTED CHANGES TO WELD PREPS; SUBJECT TO LBNL APPROVAL.
9. FITTINGS MAY BE USED IN PLACE OF BENDS; SUBJECT TO LBNL APPROVAL.
10. VENDOR SUGGESTED CHANGES TO TOLERANCES TO FACILITATE) FABRICATION OR ASSEMBLY; SUBECT TO LBNL APPROVAL.
11. REMOVE ALL THE BURRS AND REAM THE ENDS FOR CIRCULARITY AND CLEAN ENDS.
12. TUBE END SURFACE MUST BE PERPENDICULAR TO THE TUBE AXIS WITHIN +/-.010.
13. PERFORM ACCEPTANCE TESTS PER LBNL SPECIFICATION M989. B
14. A MARK DESIGNATING THE INSTALLED LENGTH WILL BE UTILIZED DURING FINAL INSTALLATION OF THE FEEDBOX ASSEMBLY. MARK, SCRIBE OR ETCH THIS LOCATION IN A PERMANENT MANNER, SUBJECT TO LBNL APPROVAL, TO AN ACCURACY OF ±0.063".
15. PROVIDE A MINIMUM LENGTH OF 4.0" OF STRAIGHT, SMOOTH PIPE ON THE INDICATED SIDE OF THE INSTALLED LENGTH MARK FOR PIPE WELDING DURING FINAL INSTALLATION OF THE FEEDBOX ASSEMBLY.
16. PIPE MUST BE STRAIGHT AND SMOOTH (NO BUMPS) FOR 1.5" ON EITHER SIDE OF THE CENTER-PLANE OF THE SUPPORT. B
17. CAP BOTH ENDS OF PIPE TO FACILITATE ACCEPTANCE TESTS. B
18. INSTALL TEMPERATURE SENSOR PER LHC SPECIFICATION LHC-QIT-ES-0002. SENSOR TO BE PROVIDED BY LBNL.
19. VENDOR WILL PROTECT BELLOWS FROM DAMAGE DURING TESTING AND SHIPPING, USING VENDORS PREFERRED METHOD, SUBJECT TO LBNL APPROVAL. B

THIRD ANGLE PROJECTION

REV	DWG	CHK	ZONE	DATE	CHANGES
B	ARH	SPV		12-02-02	RE-CONFIGURED THRUST SUPPORTS, CHANGED BELLOWS, ADDED TEMP. BELLOWS RESTRAINT, ADDED DIMS TO TOP VIEW (SHT 2), MOVED END VIEW TO NEW PAGE 3, REVISED DWG NOTES 13, 16 & 17, MINOR DRAWING DIMENSIONAL CHANGES, ADDED DRAWING NOTE 19
A	ARH	SPV	1-18-02		INITIAL RELEASE

ITEM	PART NO	REQD	DESCRIPTION	MATERIAL
34	-	4	1/4-20 THREADED ROD	-
33	-	12	1/4-20 HEX NUT	-
31	-	1	1/4" PLATE	SS 304L
30	251913	2	SUPPORT BRACKET, SURGE TANK	SS 304L
29	251850	1	TRANSDUCER TUBING	SS 304L
28	251840	1	HEATER TUBE	SS 304L
27	-	1	PIPE, PER ASTM A312	SS 304L
26	251358	1	SURGE TANK BOTTOM	SS 304L
25	251357	1	SURGE TANK TOP	SS 304L
24	251356	1	SURGE TANK BODY	SS 304L
23	251221	1	PIPE, XB, SURGE TANK ATTACHMENT	SS 304L
22	251220	1	PIPE, XB, SURGE TANK ATTACHMENT	SS 304L
21	-	1	PIPE, PER ASTM A312	SS 304L
20	-	1	PIPE, PER ASTM A312	SS 304L
19	251210	1	PIPE, CY1	SS 304L
18	25M821	1	XB BELLOWS SUPPORT BRACKET	SS 304L
17	25M862	1	WELD BRACKET	SS 304L
16	-	1	BRAIDED FLEXHOSE, 2" ID X 4.25" LL	SS 300 SERIES
15	-	1	BRAIDED FLEXHOSE, 2" ID X 7" LL	SS 300 SERIES
14	-	1	BELLOWS, FNAL# 5520-MB-390499	SS 300 SERIES
13	25M877	1	CLAMP BASE PLATE, 5/8 TUBE X 5.00 "	OFHC C101
12	251426	1	CLAMP BASE PLATE	OFHC C101
11	-	1	STANDARD BRAIDED COPPER CABLE 4"	-
10	-	1	CERNOX, TEMP SENSOR	-
9	-	1	CERNOX, TEMP SENSOR	-
8	-	1	CERNOX, TEMP SENSOR	-
7	25M922	1	THRUST SUPPORT WITH THERMAL BREAK	-
6	25M863	1	XB BELLOWS SUPPORT BRACKET	-
5	25M811	1	PIPE HANGER, SURGE TANK	-
4	25M810	1	THRUST SUPPORT WITH THERMAL BREAK	-
3	25H413	3	THRUST SUPPORT WITH THERMAL BREAK	-
2	25M814	1	CLAMP COVER 4"	OFHC, C101
1	25M813	1	CLAMP COVER 1"	OFHC, C101

UNLESS OTHERWISE SPECIFIED
TOLERANCES
X.X ± 0.1 | FRAC. ± 1/64
X.XX ± 0.03 | Angles ± 1.00°
X.XXX ± 0.010 | FINISH 125 μin
DO NOT SCALE PRINT
THREADS ARE CLASS 2
CHAMFER ENDS OF ALL SCREW TREADS 30°
CUT ROUND, 1.5 THREAD RELIEF ON MACHINED THREADS
BREAK EDGES .016 MAX. ON MACHINED WORK
REMOVE BURRS, WELD SPLATTER & LOOSE SCALE
IN ACCORDANCE WITH ASME Y14.5M & B46.1

SHOP ORDERS
ACCT NO. | REQD
DEL TO | DATE REQD
SURFACE TREATMENT -
IDENT METHOD TAG
PROJECT NUMBER N/A
PROJECT NAME N/A
DWN BY KNOLLS | DATE 07-Dec-01
CHK BY Jon Zbasnik/S.Virostek | DATE 19-Nov-02
APR BY Jon Zbasnik/D.Ossatz | DATE 4-02-02

SEW NO. -
DATE ISSD -
DATE REQD -

ERNEST ORLANDO LAWRENCE BERKELEY NATIONAL LABORATORY
UNIVERSITY OF CALIFORNIA - BERKELEY

LHC IR FEEDBOX
CRYOGENICS
PIPE, XB

MICROFILMED: | DWG. TYPE ASSEM | SHOWN ON - | SCALE: 1/4 | DO NOT SCALE PRINTS
PATENT CLEAR: | DESIGN ACCT. NO. Z5LCE2 | CATEGORY CODE LH2003 | DWG. NO. 2518906 | SIZE B | REV. B
SHEET 1 OF 4

DWG. NO. 2518906 SIZE B REV. B SHT 1 OF 4

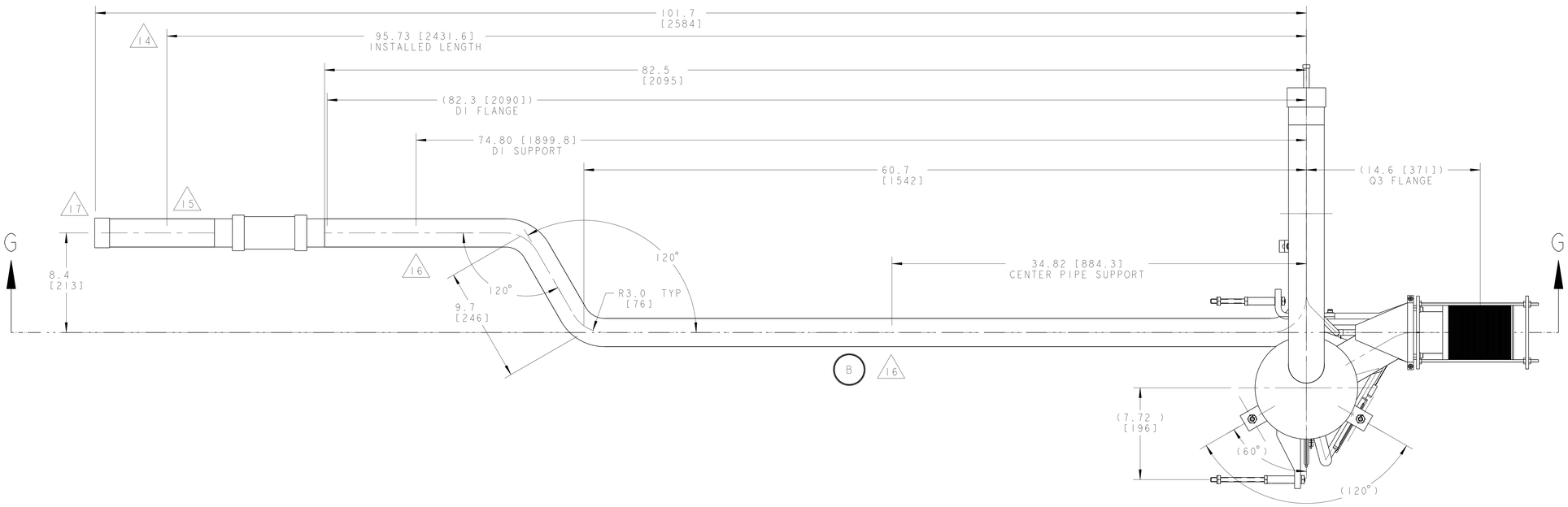

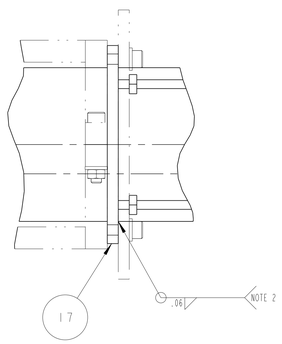

DETAIL B
SUPPORT BRACKET ASSEMBLY SHOWN IN PHANTOM
SCALE 3/4

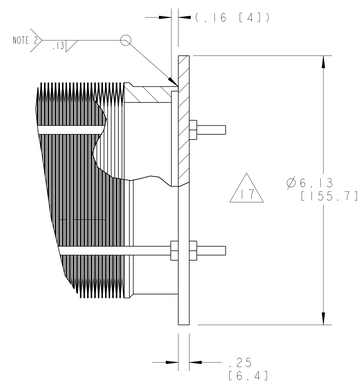

DETAIL H
SCALE 3/4

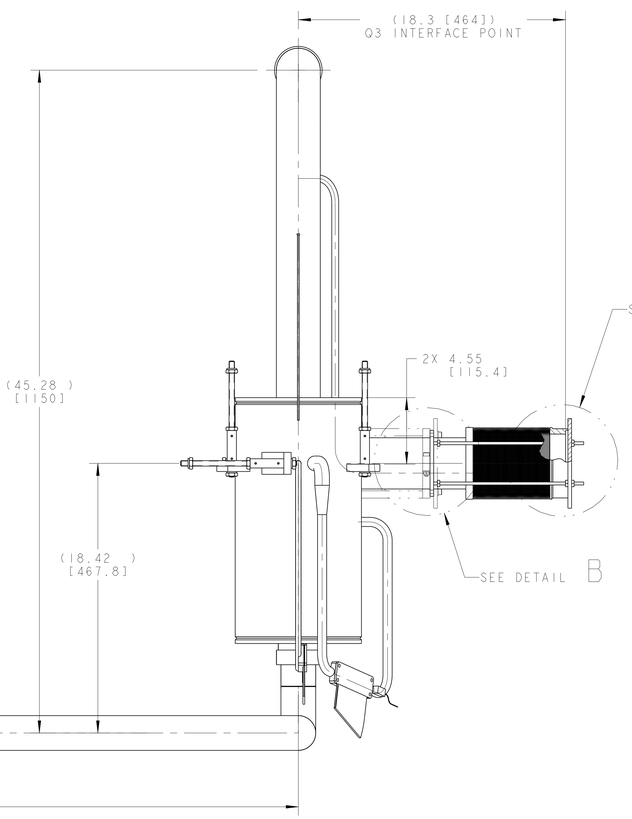

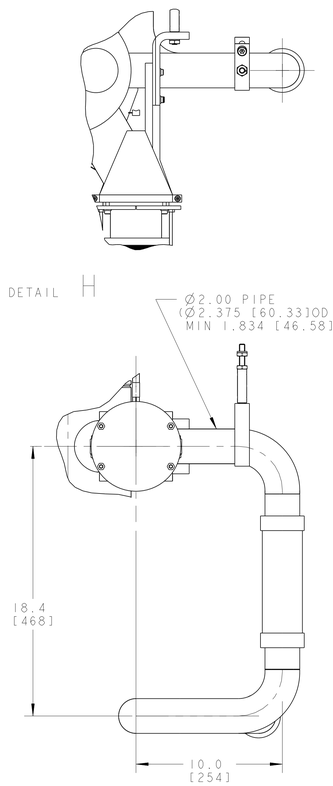

SECTION G-G

ERNEST ORLANDO LAWRENCE
BERKELEY NATIONAL LABORATORY
UNIVERSITY OF CALIFORNIA - BERKELEY

LHC IR FEEDBOX
CRYOGENICS
PIPE, XB

MICROFILMED:	DWG. TYPE	SHOWN ON	SCALE: 1/4	DO NOT SCALE PRINTS
	ASSEM	-	SHEET 2 OF 4	
PATENT CLEAR:	DESIGN ACCT. NO.	CATEGORY CODE	DWG. NO.	SIZE / REV.
	Z5LCE2	LH2003	2518906	B

DWG. NO. 2518906 SIZE/REV. B SH. 2

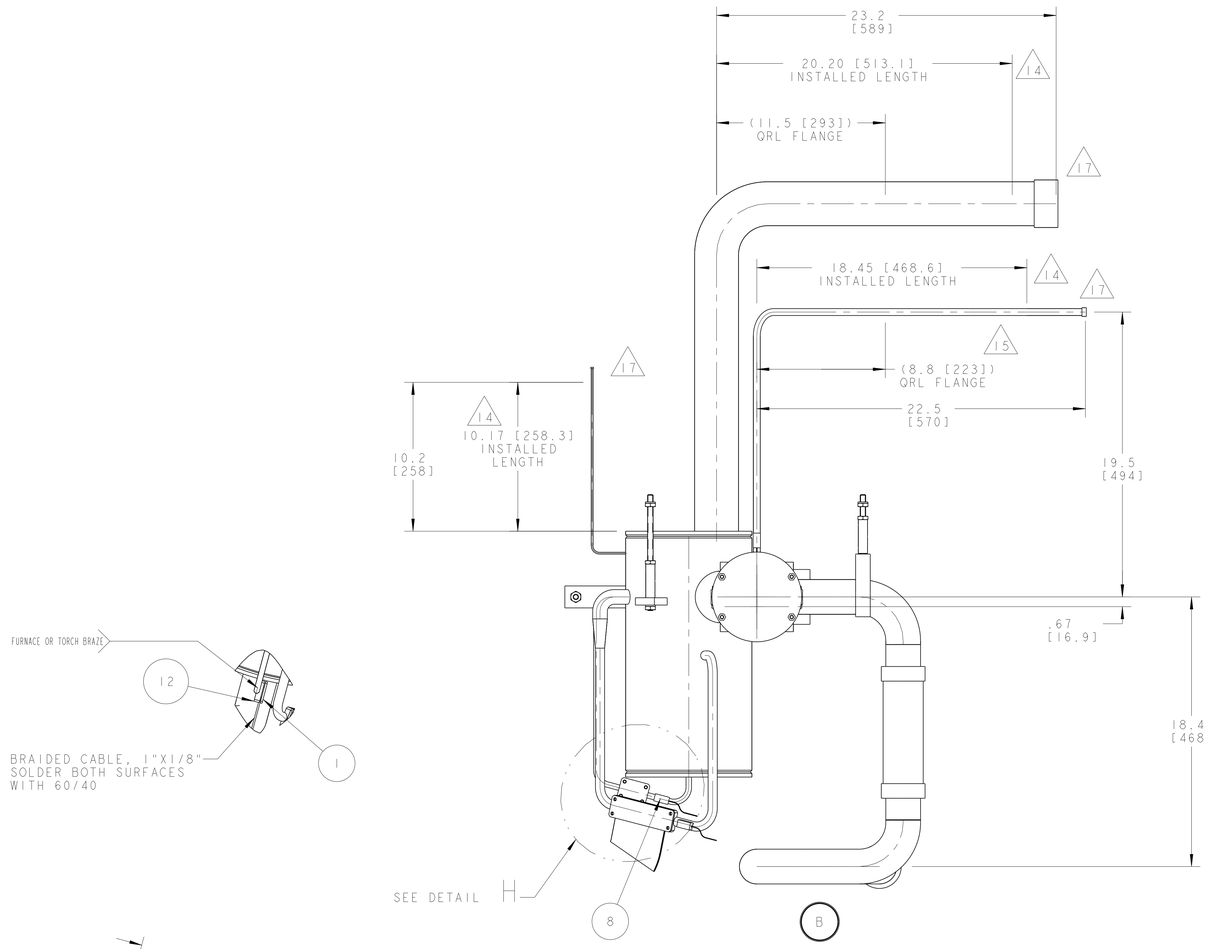

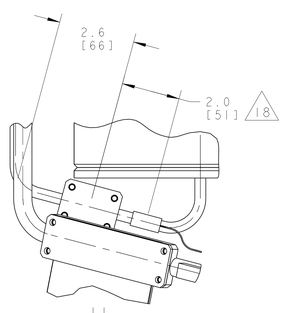

DETAIL H
SCALE 1/2

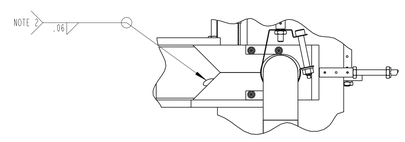

PARTIAL VIEW G - G

ERNEST ORLANDO LAWRENCE
BERKELEY NATIONAL LABORATORY
UNIVERSITY OF CALIFORNIA - BERKELEY

LHC IR FEEDBOX
CRYOGENICS
PIPE, XB

MICROFILMED:	DWG. TYPE	SHOWN ON	SCALE: 1/4	DO NOT SCALE PRINTS
	ASSEM	-	SHEET 3 OF 4	
PATENT CLEAR:	DESIGN ACCT. NO.	CATEGORY CODE	DWG. NO.	SIZE / REV.
	Z5LCE2	LH2003	2518906	B

DWG. NO. 2518906 SIZE B REV. 3

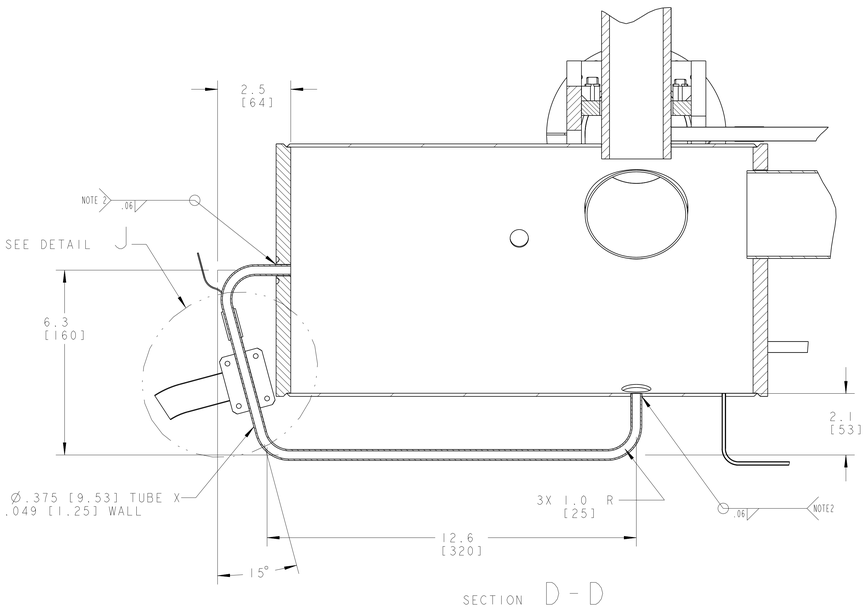

SECTION D - D
SCALE 1/2

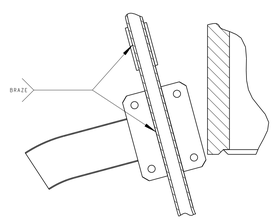

DETAIL J
SCALE 3/4

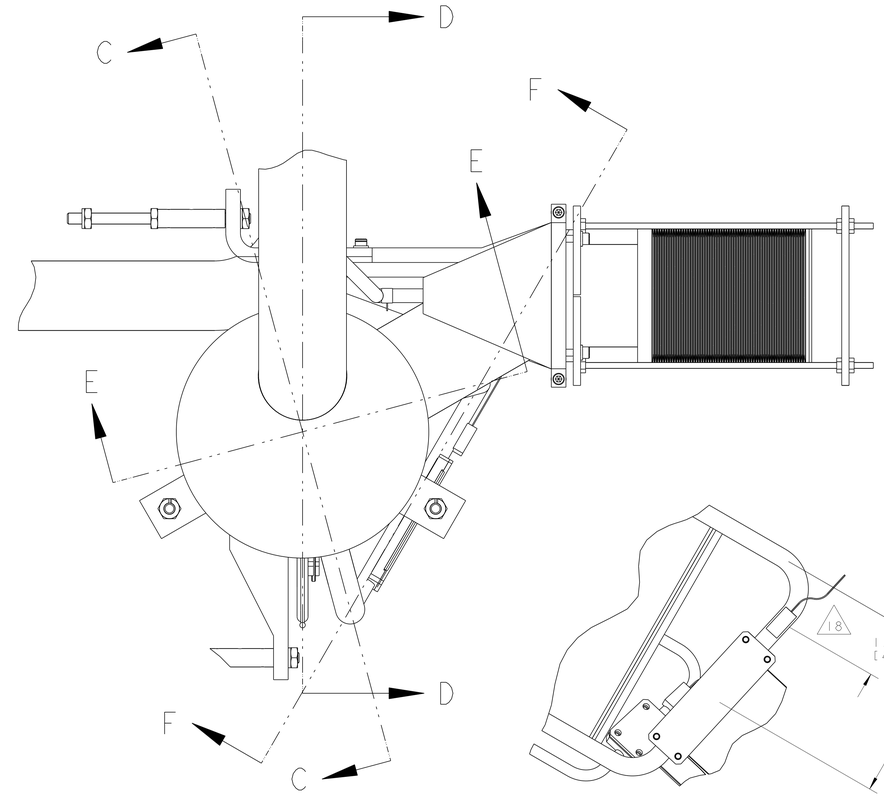

SCALE 1/2

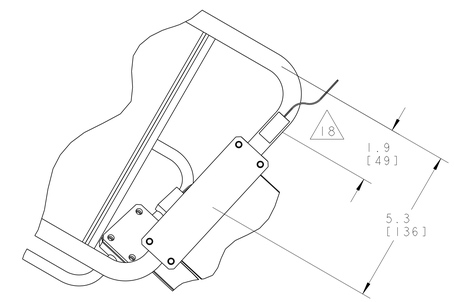

PARTIAL AUXILLIARY VIEW

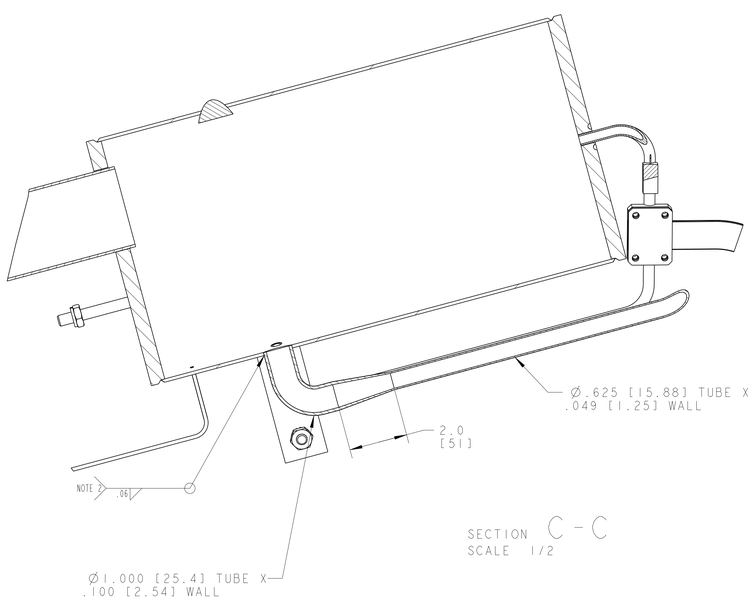

SECTION C - C
SCALE 1/2

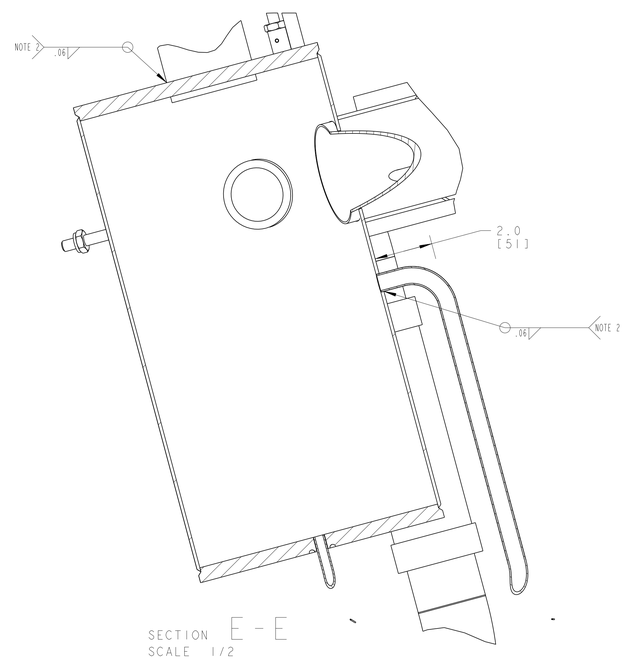

SECTION E - E
SCALE 1/2

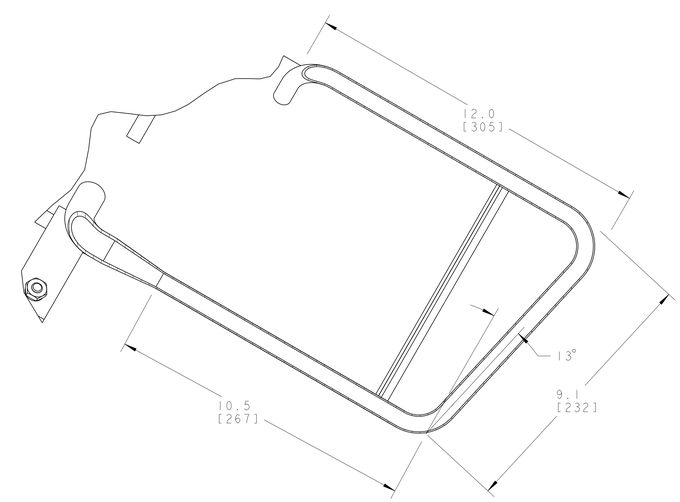

SECTION F - F
SCALE 1/2

ERNEST ORLANDO LAWRENCE
BERKELEY NATIONAL LABORATORY
UNIVERSITY OF CALIFORNIA - BERKELEY

LHC IR FEEDBOX
CRYOGENICS
PIPE, X8

MICROFILMED:	DWG. TYPE	SHOWN ON	SCALE: 1/4	DO NOT SCALE PRINTS
	ASSEM	-	SHEET 4 OF 4	
PATENT CLEAR:	DESIGN ACCT. NO.	CATEGORY CODE	DWG. NO.	TYPE / REV.
	Z5LCE2	LH2003	2518906	B

DWG. NO. 2518906 SHT. 4 REV. B