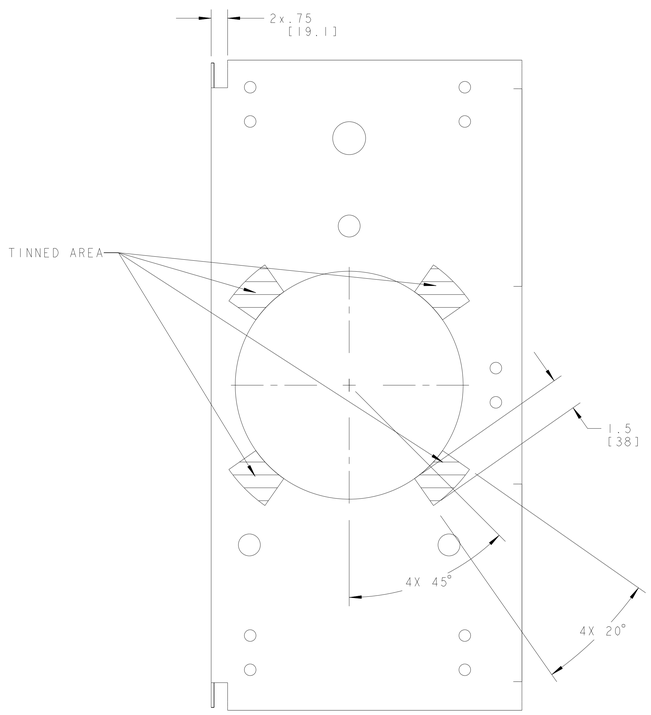

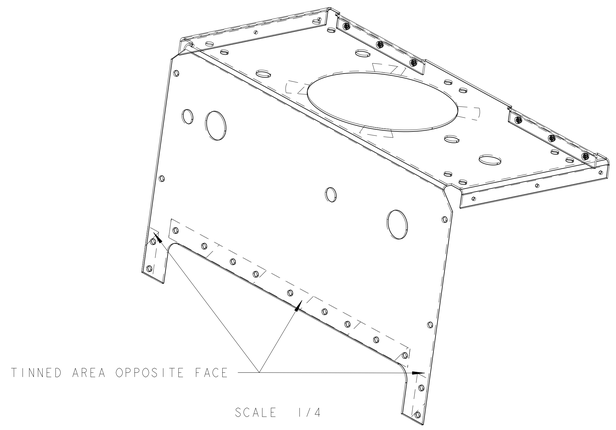

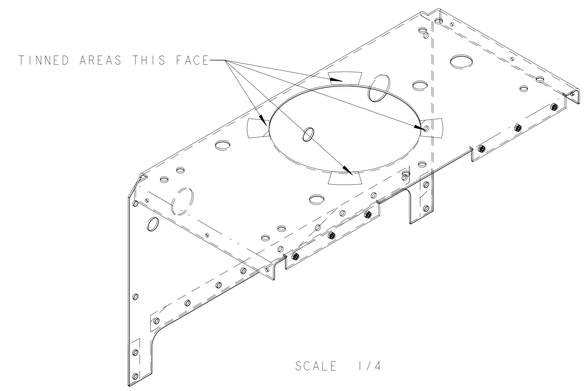

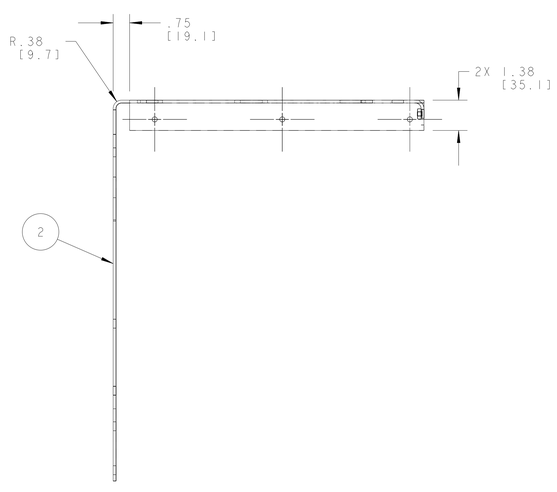

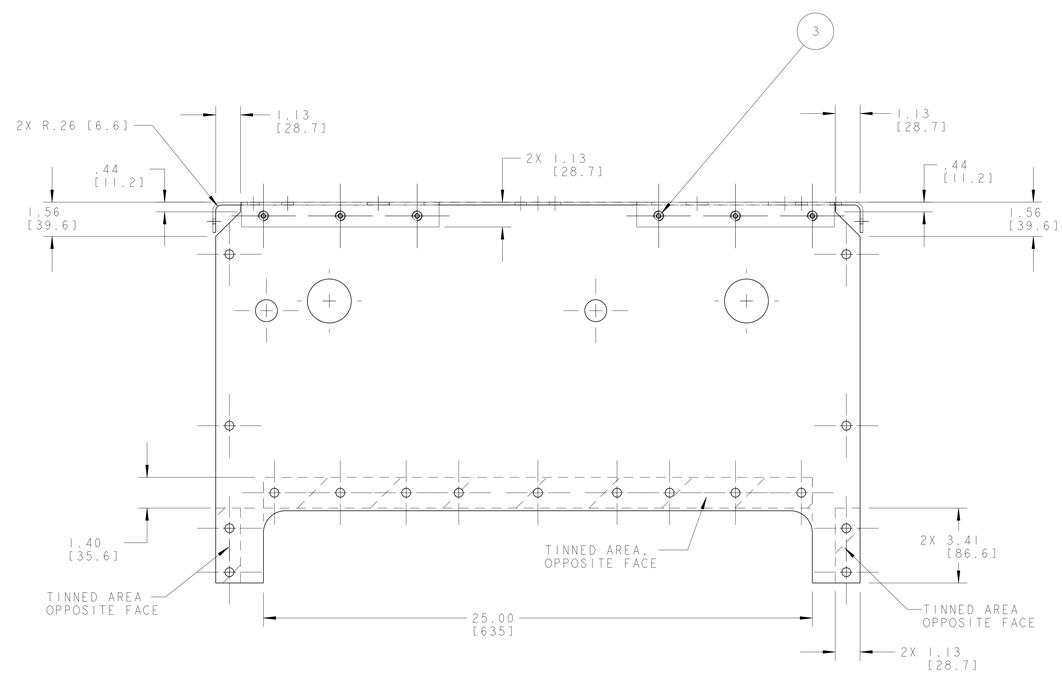

NOTES: (UNLESS OTHERWISE SPECIFIED)

1. THIS IS A CRYOGENIC VACUUM COMPONENT.
2. WELDING PROCEDURE: PER VENDOR SPECIFICATION WITH LBNL APPROVAL.
3. CLEANING PROCEDURE : PER VENDOR SPECIFICATION WITH LBNL APPROVAL.
4. PACKAGING AND STORAGE PROCEDURE OF THE COMPONENTS: PER VENDOR SPECIFICATION WITH LBNL APPROVAL.
5. DIMENSIONS AND TOLERANCING PER ANSI Y14.5M-1982. UNITS ARE IN INCHES [mm] UNLESS OTHERWISE SPECIFIED.
6. USE OF SULFUR OR SILICONE BEARING OILS, LUBRICANTS, OR COOLANTS ARE STRICTLY PROHIBITED.
7. USE OF RESIN OR RUBBER BONDED ABRASIVES UNDER POWER IS STRICTLY PROHIBITED. USE VITREOUS BONDED ABRASIVES ONLY.
8. TIN NOTED AREAS WITH 60/40 Sn/Pb SOLDER, USE RESIN FLUX.

THIRD ANGLE PROJECTION

REV	DWG	CHK	ZONE	DATE	CHANGES
A	JDR	DPO		11-06-02	INITIAL RELEASE

ITEM	PART NO	REQD	DESCRIPTION	MATERIAL
3	-	6	M5 CAPTIVE NUT, PEM AC-M5-1-SF	SS
2	-	1	COPPER SHEET, .125 THICK, RIGHT SIDE HELIUM PORT	COPPER, OFHC, C101

UNLESS OTHERWISE SPECIFIED
TOLERANCES: X.X ± 0.1 FRAC. ± 1/64; X.XX ± 0.03 Angles ± 1.00°; X.XXX ± 0.010 FINISH 125 $\sqrt{\text{rms}}$
DO NOT SCALE PRINT
THREADS ARE CLASS 2
CHAMFER ENDS OF ALL SCREW THREADS 30°
CUT ROUND, 1.5 THREAD RELIEF ON MACHINED THREADS
BREAK EDGES .015 MAX. ON MACHINED WORK
REMOVE BURRS, WELD SPLATTER & LOOSE SCALE
IN ACCORDANCE WITH ASME Y14.5M & B46.1

SHOP ORDERS
ACCT NO. / NO. REQD
DEL TO
SURFACE TREATMENT -
IDENT METHOD TAG
PROJECT NUMBER N/A
PROJECT NAME N/A
DWG BY R. LA MANTIA DATE 15-Feb-02
CHK BY JON ZBASNIK DATE 13-AUG-02
APP BY JON ZBASNIK DATE 13-AUG-02
SER NO -
DATE ISSD -
DATE REQD -

ERNEST ORLANDO LAWRENCE BERKELEY NATIONAL LABORATORY
UNIVERSITY OF CALIFORNIA - BERKELEY

LHC IR FEEDBOX
CRYOGENICS
TOP SHIELD, DFBXF

MICROFILMED: | DWG. TYPE: ASSEM | SHOWN ON: 24C395 | SCALE: 3/8 | DO NOT SCALE PRINTS
PATENT CLEAR: | DESIGN ACCT. NO.: 5ZLCE2 | CATEGORY CODE: LH2003 | DWG. NO.: 2518796 | SIZE: A | REV.: A
SHEET 1 OF 3

DWG. NO. 2518796 SIZE A REV. A

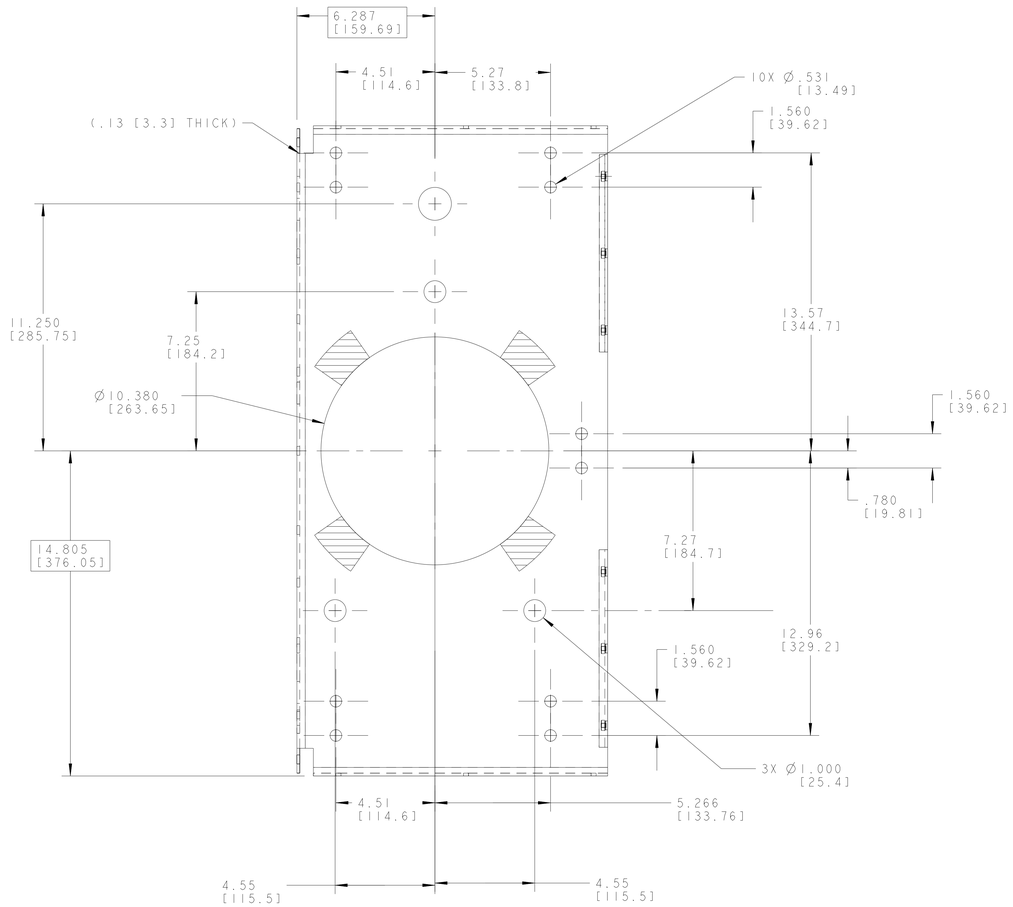

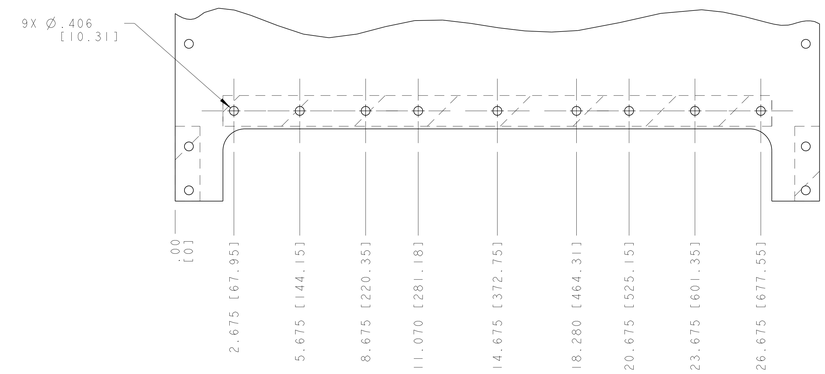

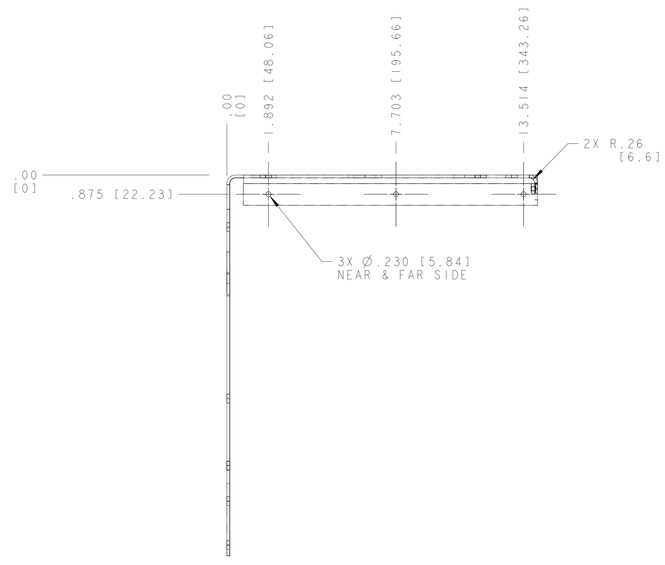

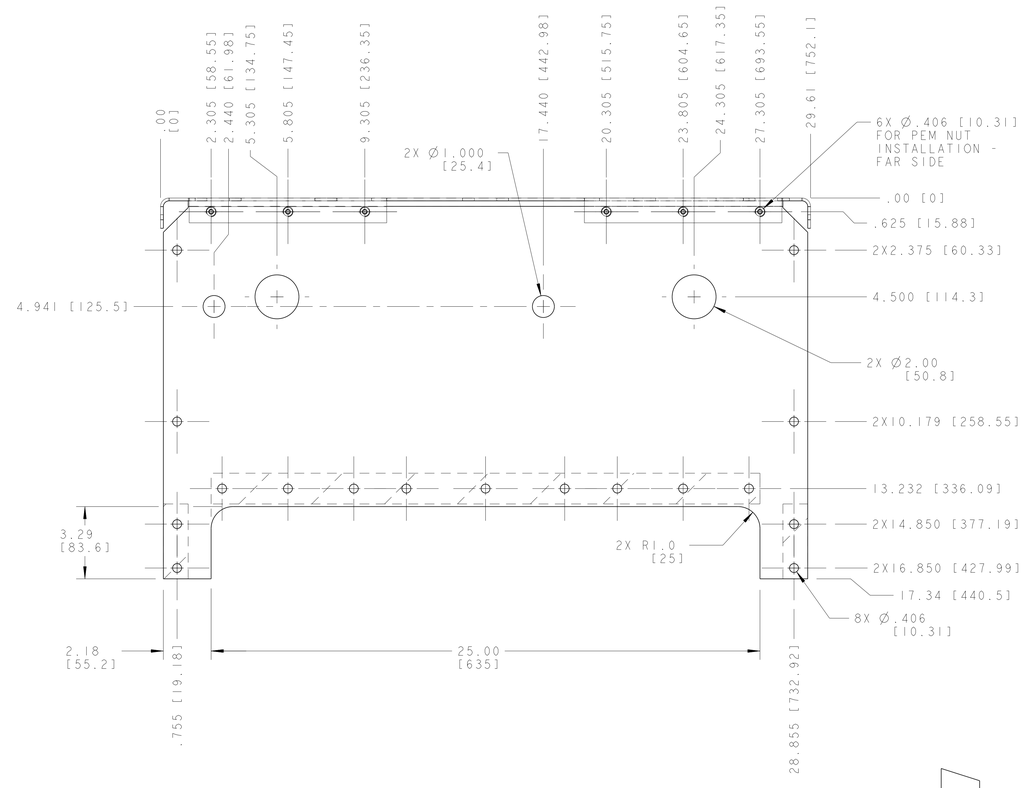

THIRD ANGLE PROJECTION

ERNEST ORLANDO LAWRENCE
BERKELEY NATIONAL LABORATORY
UNIVERSITY OF CALIFORNIA - BERKELEY

LHC IR FEEDBOX
CRYOGENICS
TOP SHIELD, DFBXF

MICROFILMED:	DWG. TYPE	SHOWN ON	SCALE: 3/8	DO NOT SCALE PRINTS
	ASSEM	24C395	SHEET 2 OF 3	
PATENT CLEAR:	DESIGN ACCT. NO.	CATEGORY CODE	DWG. NO.	SIZE / REV.
	5ZLCE2	LH2003	2518796	A

DWG. NO. 2518796 SHEET 2 OF 3 REV. A

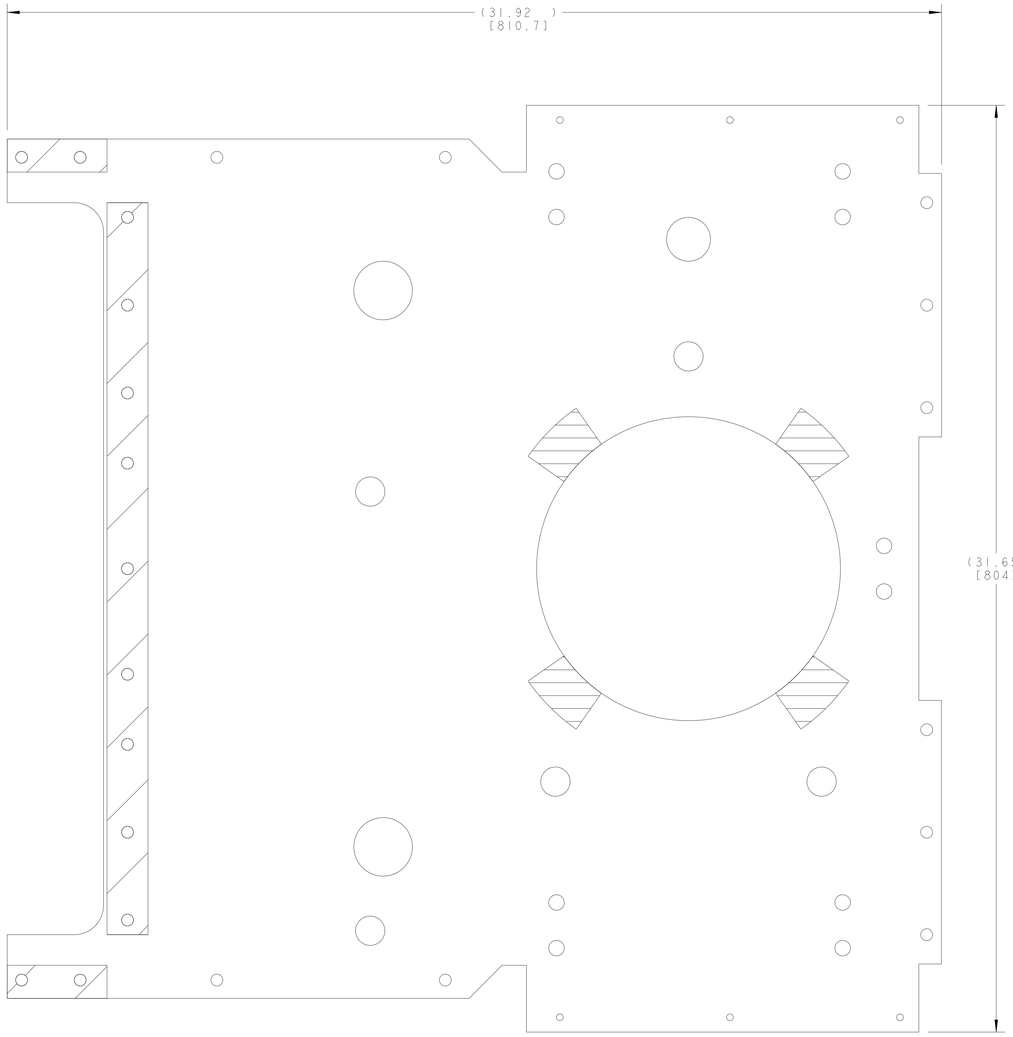

SCALE 1/2

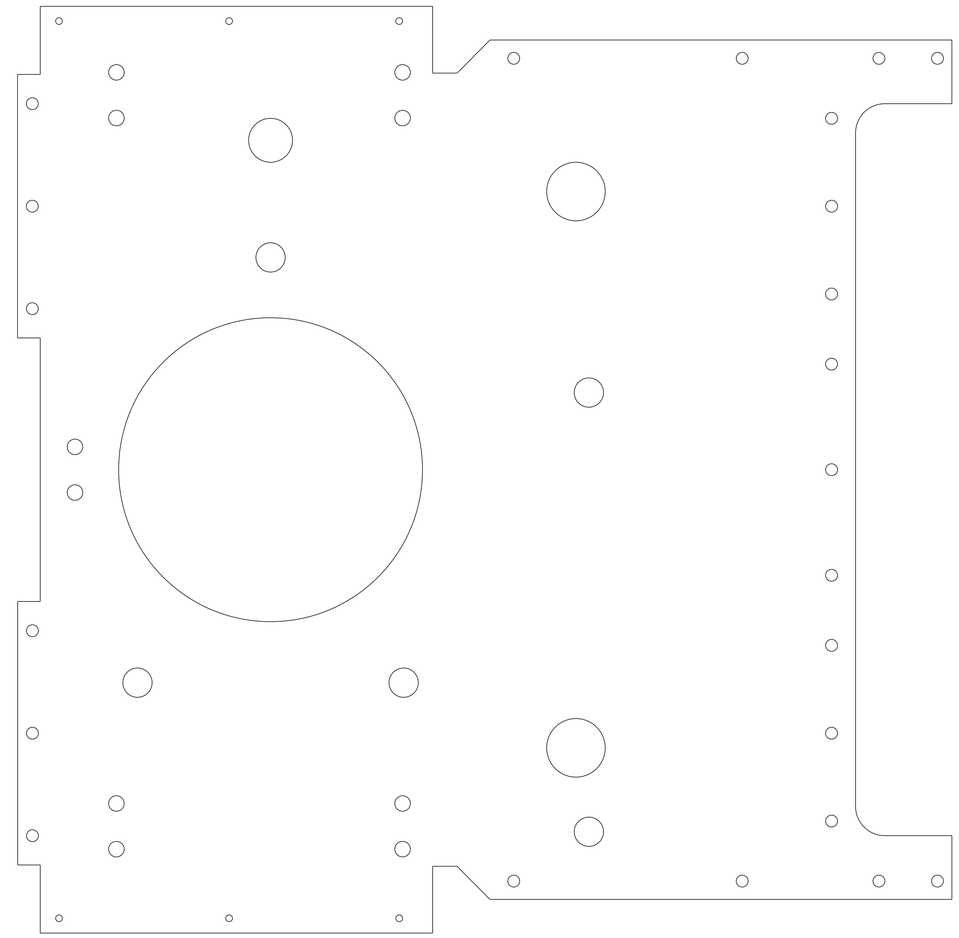

FLAT PATTERN
SCALE: 1/2

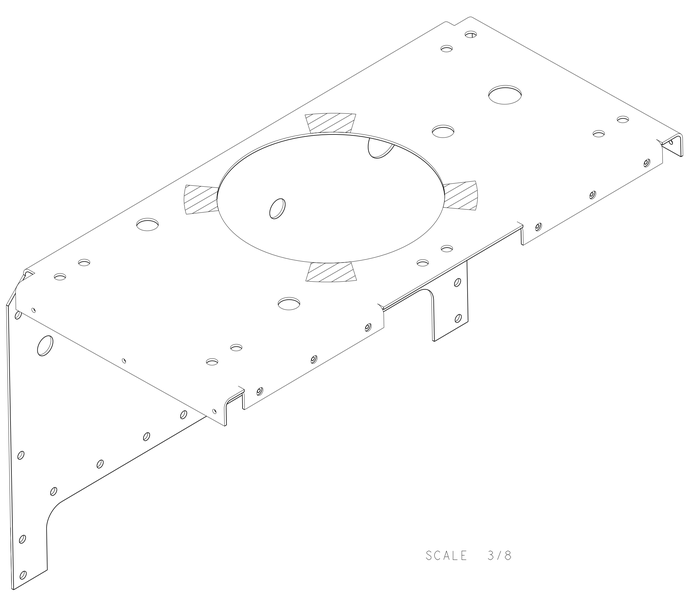

SCALE 3/8

THIRD ANGLE PROJECTION

ERNEST ORLANDO LAWRENCE
BERKELEY NATIONAL LABORATORY
UNIVERSITY OF CALIFORNIA - BERKELEY

LHC IR FEEDBOX
CRYOGENICS
TOP SHIELD, DFBXF

MICROFILMED:	DWG. TYPE	SHOWN ON	SCALE: 3/8	DO NOT SCALE PRINTS
	ASSEM	24C395	SHEET 3 OF 3	
PATENT CLEAR:	DESIGN ACCT. NO.	CATEGORY CODE	DWG. NO.	SIZE / REV.
	5ZLCE2	LH2003	2518796	A

DWG. NO. 2518796 SIZE A REV. 3