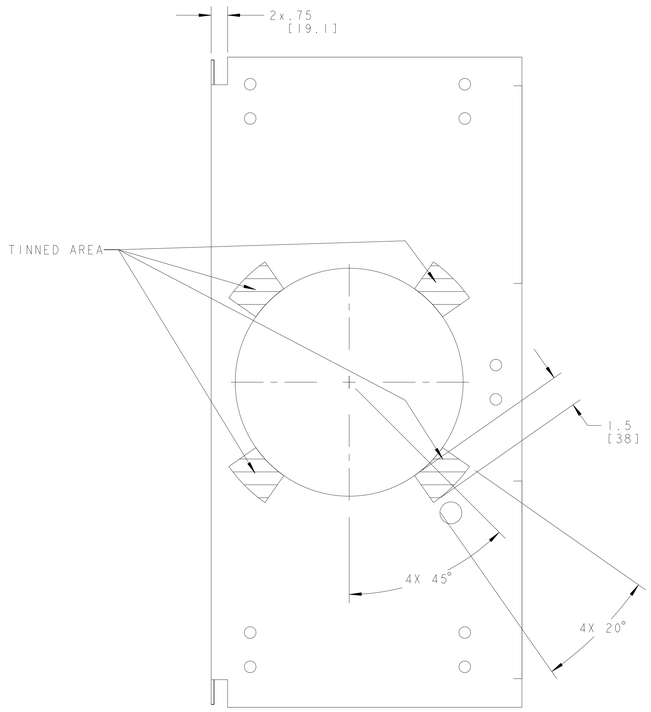

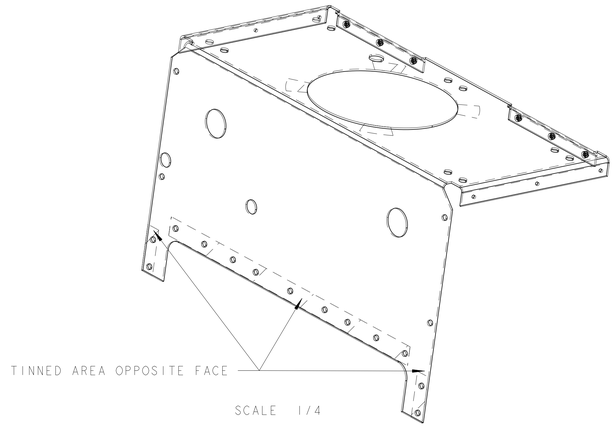

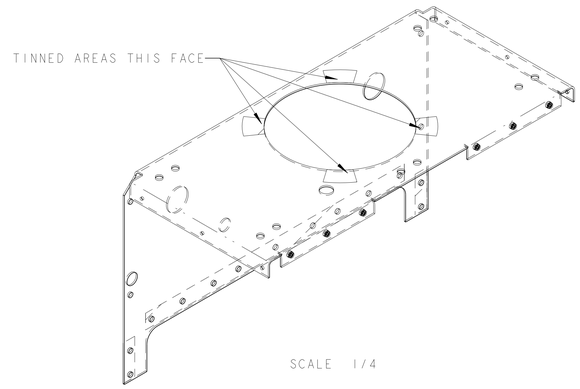

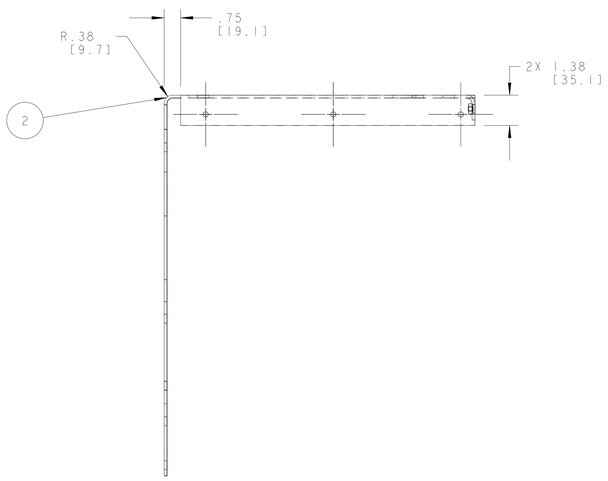

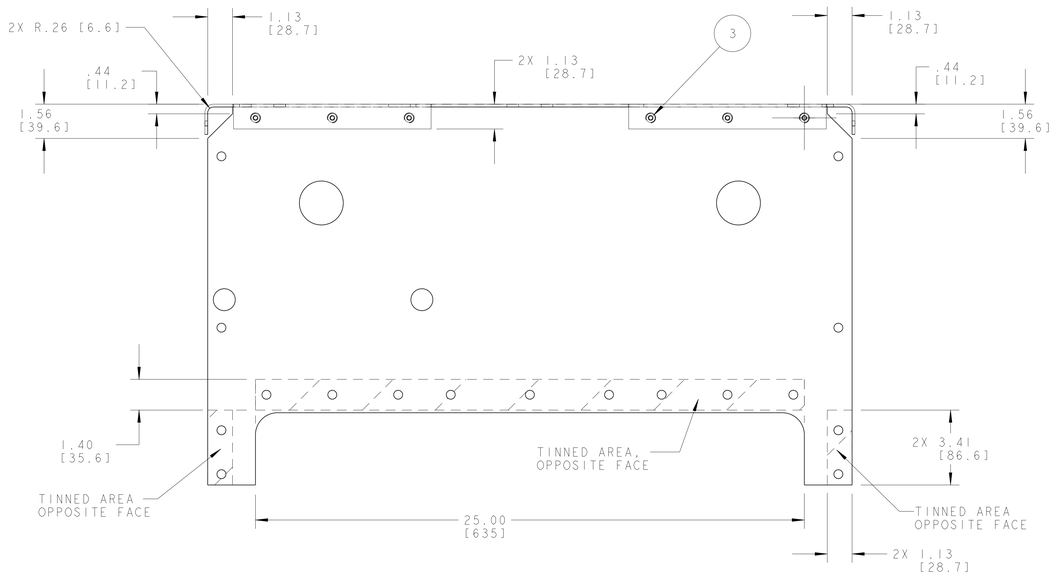

NOTES: (UNLESS OTHERWISE SPECIFIED)

1. THIS IS A CRYOGENIC VACUUM COMPONENT.
2. WELDING PROCEDURE: PER VENDOR SPECIFICATION WITH LBNL APPROVAL.
3. CLEANING PROCEDURE : PER VENDOR SPECIFICATION WITH LBNL APPROVAL.
4. PACKAGING AND STORAGE PROCEDURE OF THE COMPONENTS: PER VENDOR SPECIFICATION WITH LBNL APPROVAL.
5. DIMENSIONS AND TOLERANCING PER ANSI Y14.5M-1982. UNITS ARE IN INCHES [mm] UNLESS OTHERWISE SPECIFIED.
6. USE OF SULFUR OR SILICONE BEARING OILS, LUBRICANTS, OR COOLANTS ARE STRICTLY PROHIBITED.
7. USE OF RESIN OR RUBBER BONDED ABRASIVES UNDER POWER IS STRICTLY PROHIBITED. USE VITREOUS BONDED ABRASIVES ONLY.
8. TIN NOTED AREAS WITH 60/40 Sn/Pb SOLDER, USE RESIN FLUX.

THIRD ANGLE PROJECTION

REV	DWG	CHK	ZONE	DATE	CHANGES
B	RLM	JPZ		10/16/03	LOCATE 2X 1" HOLE; ADD HORIZ DIM 14.156 ADD Ø.531 HOLE LOCATIONS; REMOVE BASIC DIMENSION BOX 6.287
A	JDR	DPO		11-04-02	INITIAL RELEASE

ITEM	PART NO.	REQD	DESCRIPTION	MATERIAL
3	-	6	M5 CAPTIVE NUT, PEM AC-M5-1-SF	SS
2	-	1	COPPER SHEET, .125 THICK, NO HELIUM PORT	COPPER, OFHC, C101

UNLESS OTHERWISE SPECIFIED
TOLERANCES: X.X ± 0.1 FRAC. ± 1/64; X.XX ± 0.03 Angles ± 1.00°; X.XXX ± 0.010 FINISH 125 μin
DO NOT SCALE PRINT
THREADS ARE CLASS 2
CHAMFER ENDS OF ALL SCREW THREADS 30°
CUT ROUND, 1.5 THREAD RELIEF ON MACHINED THREADS
BREAK EDGES .016 MAX. ON MACHINED WORK
REMOVE BURRS, WELD SPLATTER & LOOSE SCALE
IN ACCORDANCE WITH ASME Y14.5M & B46.1

SHOP ORDERS
ACCT NO. | NO. REQD | GEN NO. | DATE ISSD | DATE REQD | SUBCAT. | DATE MT | IDENT METHOD TAG | PROJECT NUMBER N/A | PROJECT NAME N/A

DWN R. LA MANTIA DATE 15-Feb-02
CHK JON ZBASNIK DATE 13-AUG-02
APP JON ZBASNIK DATE 13-AUG-02

ERNEST ORLANDO LAWRENCE BERKELEY NATIONAL LABORATORY
UNIVERSITY OF CALIFORNIA - BERKELEY

LHC IR FEEDBOX
CRYOGENICS
TOP SHIELD, DFBXB/DFBXD/DFBXH/DFBXE

MICROFILMED: | DWG. TYPE ASSEM | SHOWN ON - | SCALE: 3/8 | DO NOT SCALE PRINTS
SHEET 1 OF 3
PATENT CLEAR: | DESIGN ACCT. NO. 5ZLCE2 | CATEGORY CODE LH2003 | DWG. NO. 2518786 | SIZE B | REV. B

DWG. NO. 2518786 SIZE B REV 1

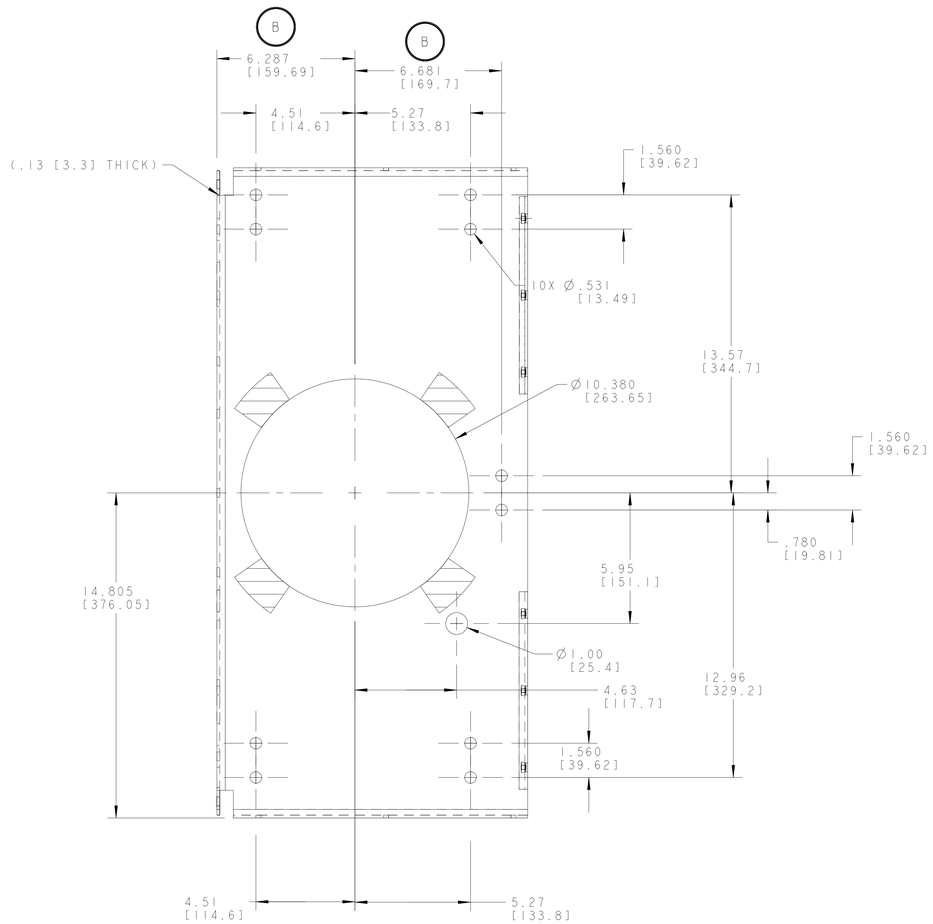

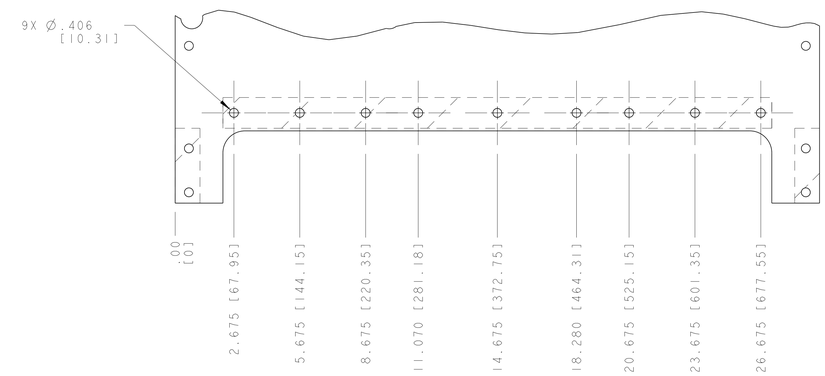

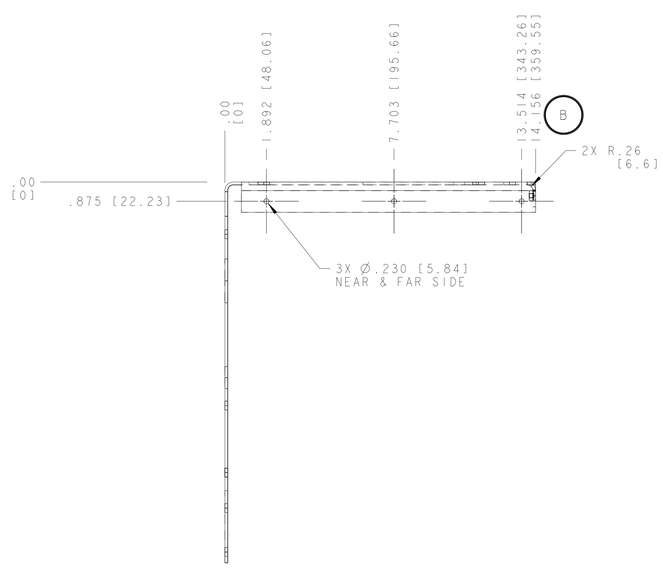

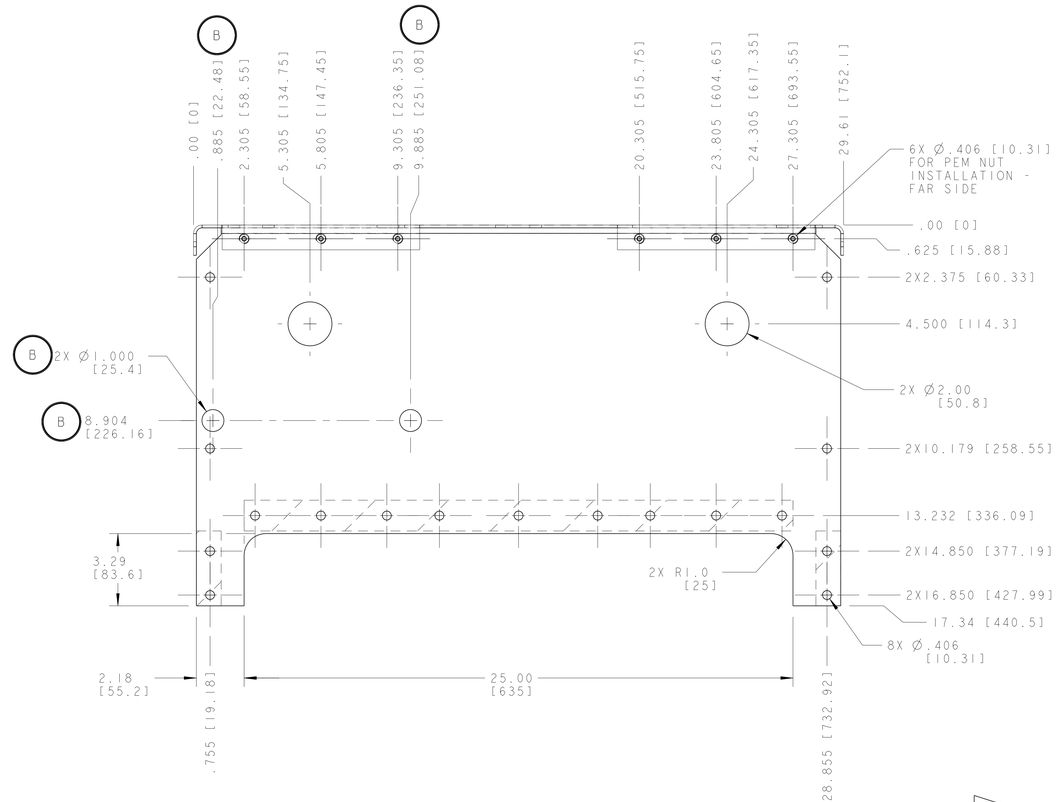

THIRD ANGLE PROJECTION

ERNEST ORLANDO LAWRENCE
BERKELEY NATIONAL LABORATORY
UNIVERSITY OF CALIFORNIA - BERKELEY

LHC IR FEEDBOX
CRYOGENICS
TOP SHIELD, DFBXB/DFBXD/DFBXH/DFBXE

MICROFILMED:	DWG. TYPE	SHOWN ON	SCALE: 3/8	DO NOT SCALE PRINTS
	ASSEM	-	SHEET 2 OF 3	
PATENT CLEAR:	DESIGN ACCT. NO.	CATEGORY CODE	DWG. NO.	SIZE / REV.
	5ZLCE2	LH2003	2518786	B

DWG. NO. 2518786 SHEET NO. 2 REV. B

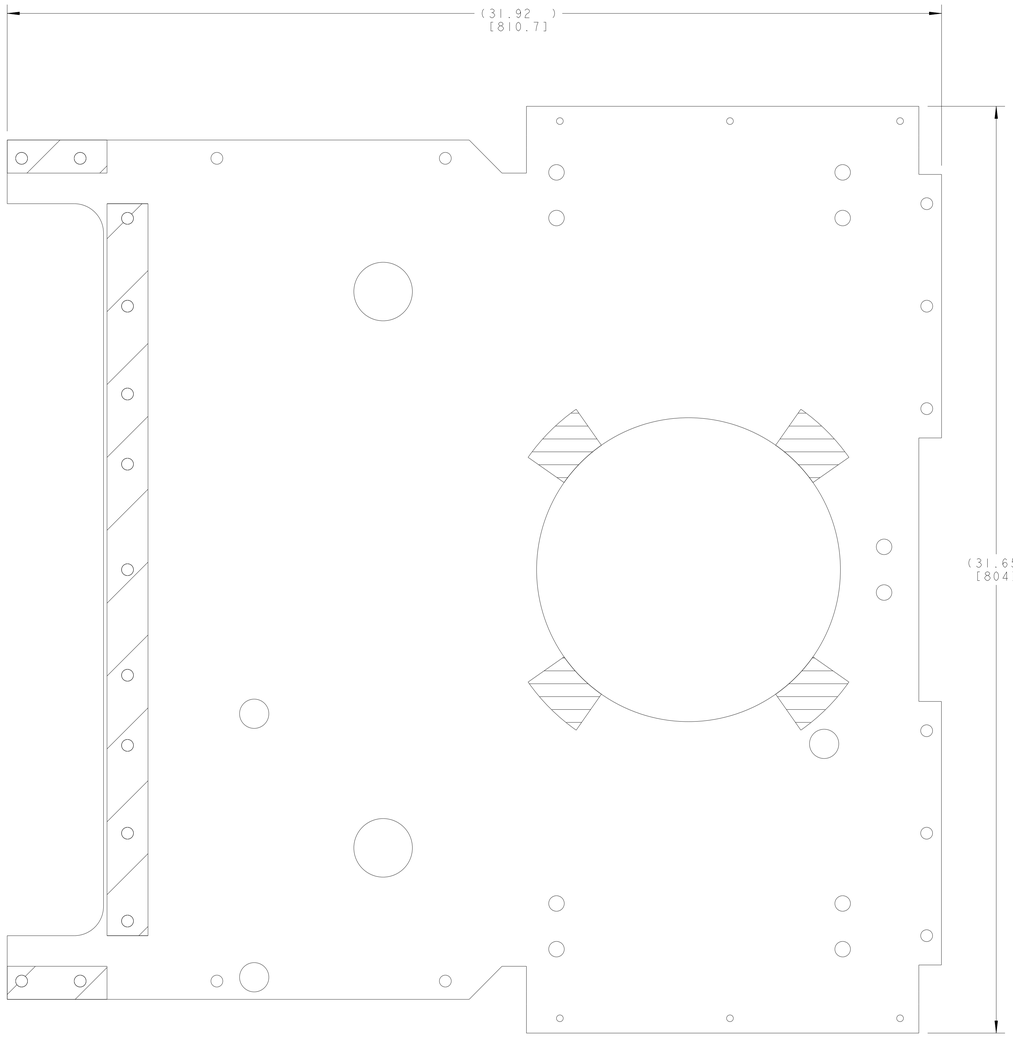

SCALE 1/2

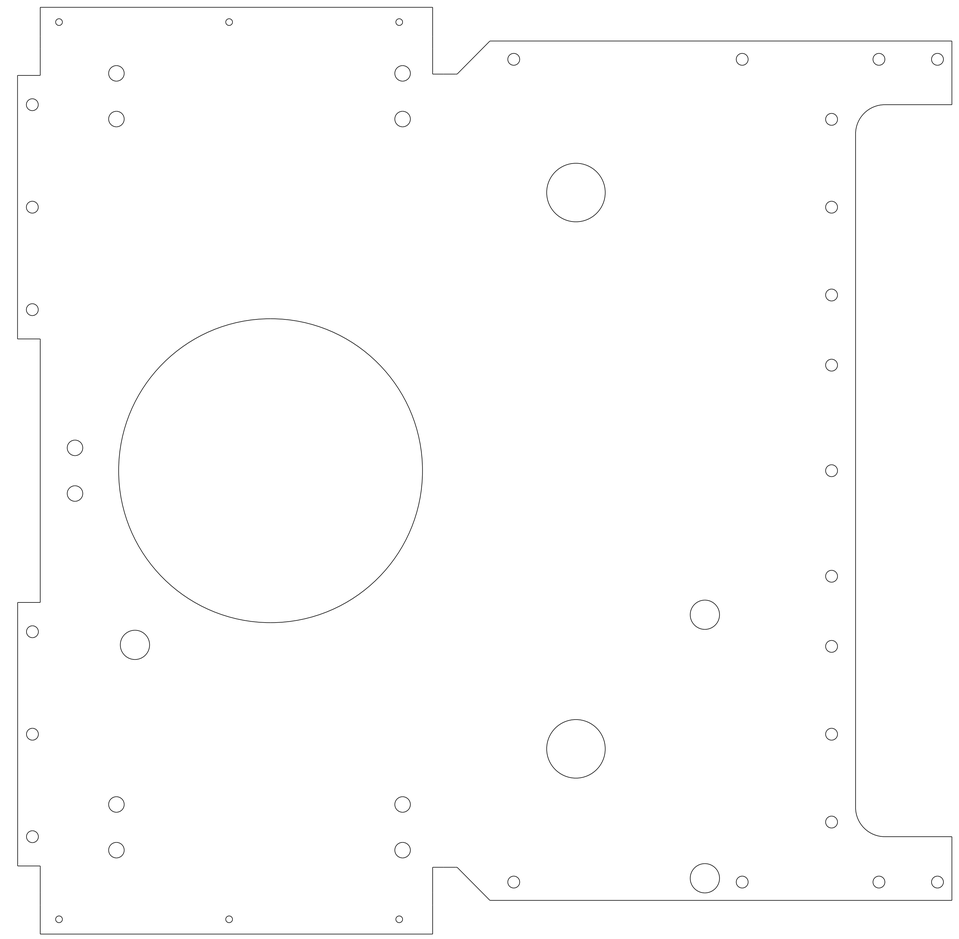

FLAT PATTERN
SCALE: 1/2

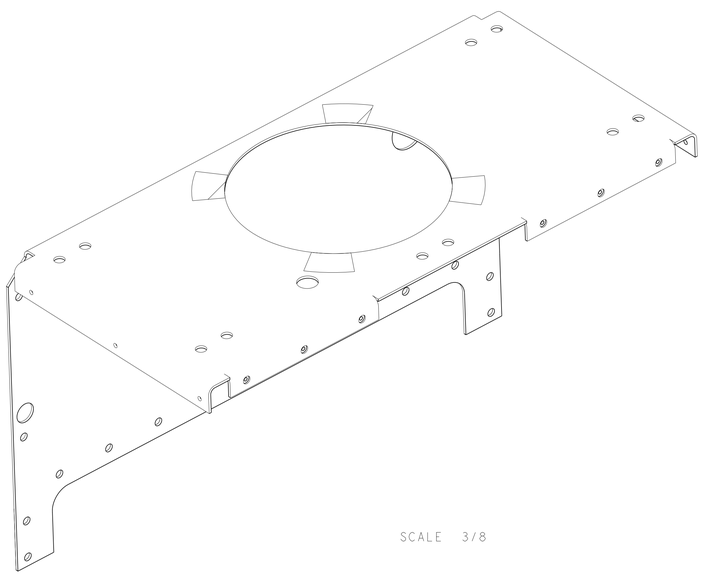

SCALE 3/8

THIRD ANGLE PROJECTION

ERNEST ORLANDO LAWRENCE
BERKELEY NATIONAL LABORATORY
UNIVERSITY OF CALIFORNIA - BERKELEY

LHC IR FEEDBOX
CRYOGENICS
TOP SHIELD, DFBXB/DFBXD/DFBXH/DFBXE

MICROFILMED:	DWG. TYPE	SHOWN ON	SCALE: 3/8	DO NOT SCALE PRINTS
	ASSEM	-	SHEET 3 OF 3	
PATENT CLEAR:	DESIGN ACCT. NO.	CATEGORY CODE	DWG. NO.	SIZE / REV.
	5ZLCE2	LH2003	2518786	B

DWG. NO. 2518786 SIZE B REV. 3