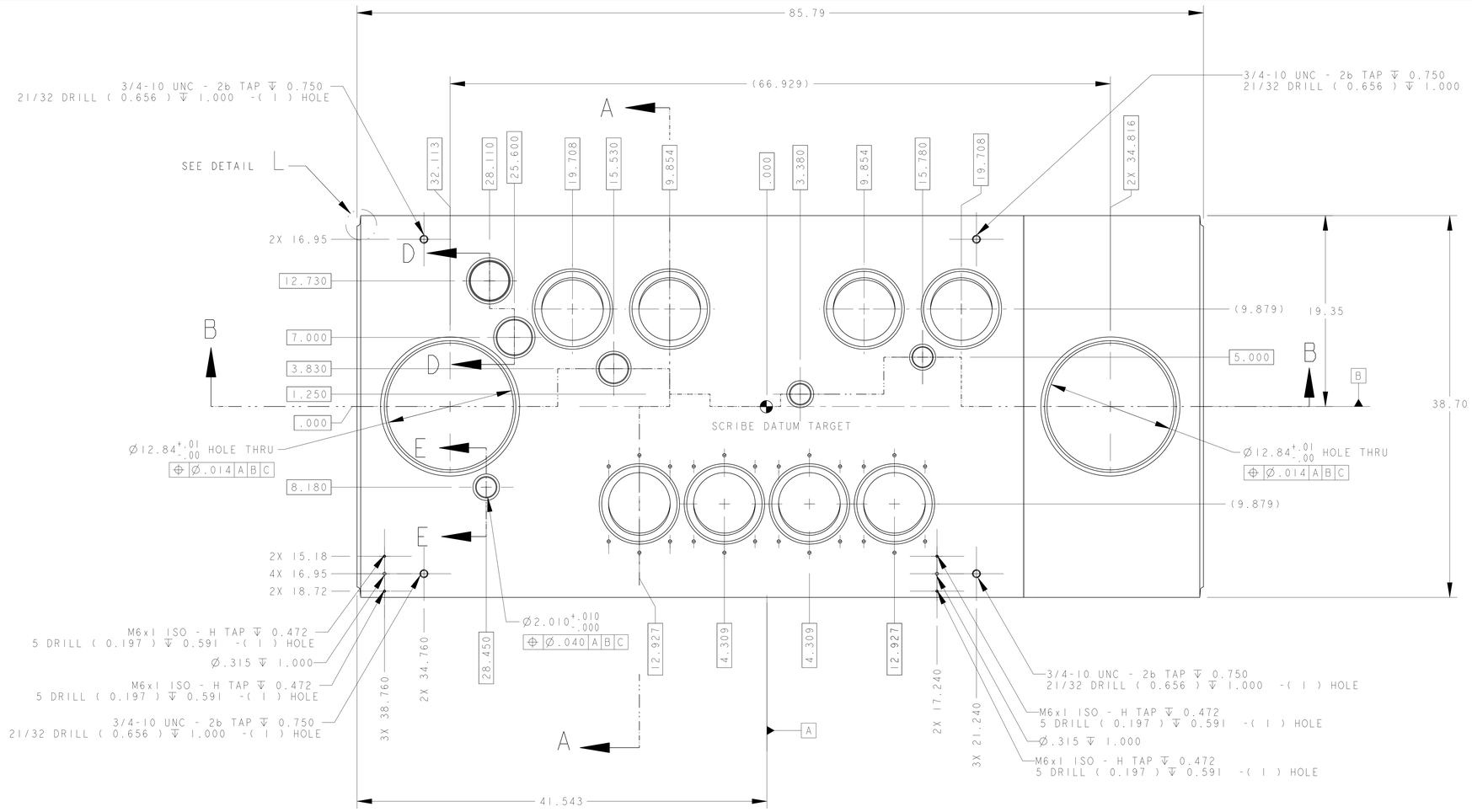

NOTES: UNLESS OTHERWISE SPECIFIED,

1. BLANCHARD GRIND PLATE, DATUM -C- SIDE BEFORE MACHINING MINIMUM CLEANUP.
2. DIMENSIONS AND TOLERANCING PER ANSI Y14.5M-1982 UNITS ARE IN INCHES UNLESS OTHERWISE SPECIFIED.
3. USE OF SULFUR OR SILICONE BEARING OILS, LUBRICANTS, OR COOLANTS ARE STRICTLY PROHIBITED
4. USE OF RESIN OR RUBBER BONDED ADRASIVES UNDER POWER IS STRICTLY PROHIBITED. USE VITREOUS BONDED ABRASIVES ONLY.
5. CLEANING SPECIFICATIONS FOR PARTS AND WELDMENTS TO BE PROVIDED BY VENDOR AND APPROVED BY LBNL.
6. PROTECT FINISHED PART BY BAGGING OR SIMILAR METHOD TO PROTECT AND MAINTAIN CLEANLINESS DURING SHIPMENT AND STORAGE.
7. VENDOR PROPOSED WELD PREPS MODIFICATIONS SUBJECT TO LBNL APPROVAL.
8. STRESS RELIEVE PART AFTER BENDING, PRIOR TO FINISH MACHINING.
9. ESTIMATED WEIGHT = 1,096 LBS

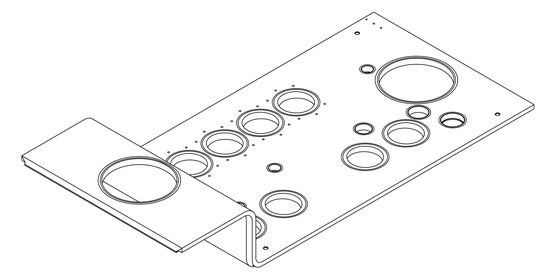

SCALE 1/10

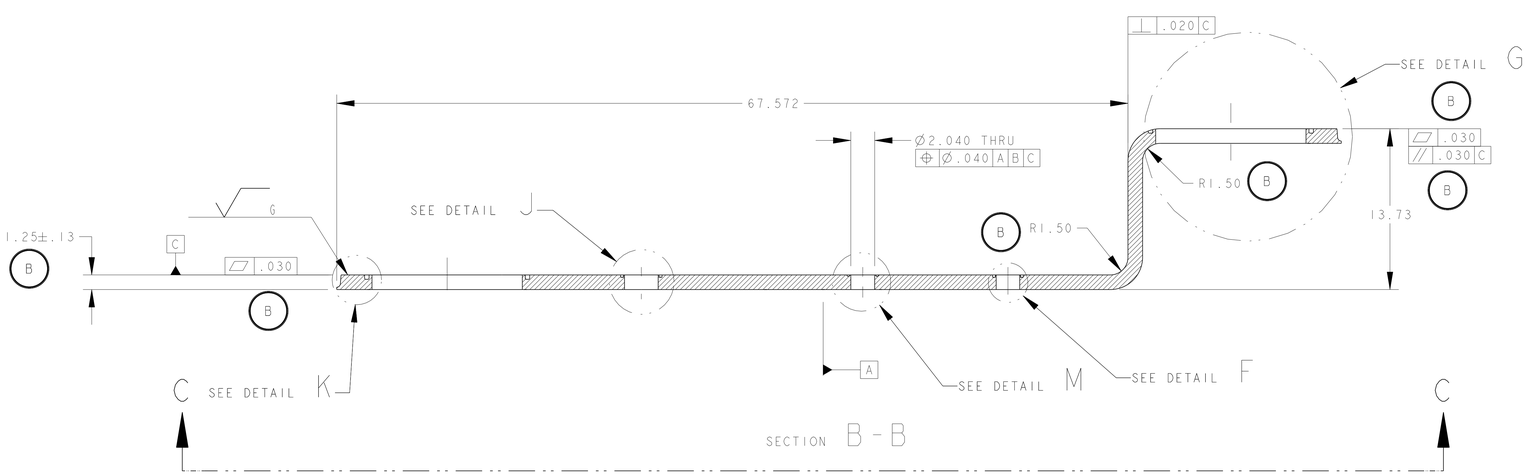

REV	DWG	CHK	ZONE	DATE	CHANGES
B	JDR	DPO		02/19/03	- INCREASED BEND RADIUS FROM 1.00, - INCREASED THICKNESS TOL. FROM 1.25 +/- .03, - ADDED TRUE PROSPECT TOL. TO HOLES (SHEET 2), - INCREASED FLATNESS TOLERANCE FROM .010, - INCREASED PARALLELISM FROM .020,
A	JDR	DPO		10/08/02	INITIAL RELEASE

THIRD ANGLE PROJECTION

UNLESS OTHERWISE SPECIFIED
TOLERANCES
X.X ± 0.1 FRAC. ± 1/64
X.XX ± 0.03 Angles ± 1.00°
X.XXX ± 0.010 FINISH 125 √(Ra)
DO NOT SCALE PRINT
THREADS ARE CLASS 2
CHAMFER ENDS OF ALL SCREW THREADS 30°
CUT ROUND, 1.5 THREAD RELIEF ON MACHINED THREADS
BREAK EDGES .016 MAX. ON MACHINED WORK
REMOVE BURRS, WELD SPLATTER & LOOSE SCALE
IN ACCORDANCE WITH ASME Y14.5M & B46.1

SHOP ORDERS

ACCT NO.	NO. REQD	SEW NO.	-
DEL TO		DATE ISSD	-
SURFACE TREATMT	-	DATE REQD	-
IDENT METHOD	TAG		
PROJECT NUMBER	N/A		
PROJECT NAME	N/A		
DWN BY	KNOLLS	DATE	22-Aug-01
CHK BY	JON ZBASNIK	DATE	04-APR-02
APR BY	JON ZBASNIK	DATE	04-APR-02

ERNEST ORLANDO LAWRENCE BERKELEY NATIONAL LABORATORY
UNIVERSITY OF CALIFORNIA - BERKELEY

LHC IR FEEDBOX
VACUUM
TOP PLATE DFBX E, IP5 LEFT

DESCRIPTION	MATERIAL	MAT. LOCATION
PLATE,HOT ROLLED, ANNEALED, PICKLED PER ASTM A-240	304L SS	-

MICROFILMED:	DWG. TYPE	SHOWN ON	SCALE: 1/5	DO NOT SCALE PRINTS
	PART	25i149	SHEET 1 OF 3	
PATENT CLEAR:	DESIGN ACCT. NO.	CATEGORY CODE	DWG. NO.	SIZE / REV.
	Z5LCE2	LH2002	2518766	B

DWG. NO. 2518766 SIZE/REV. B 1

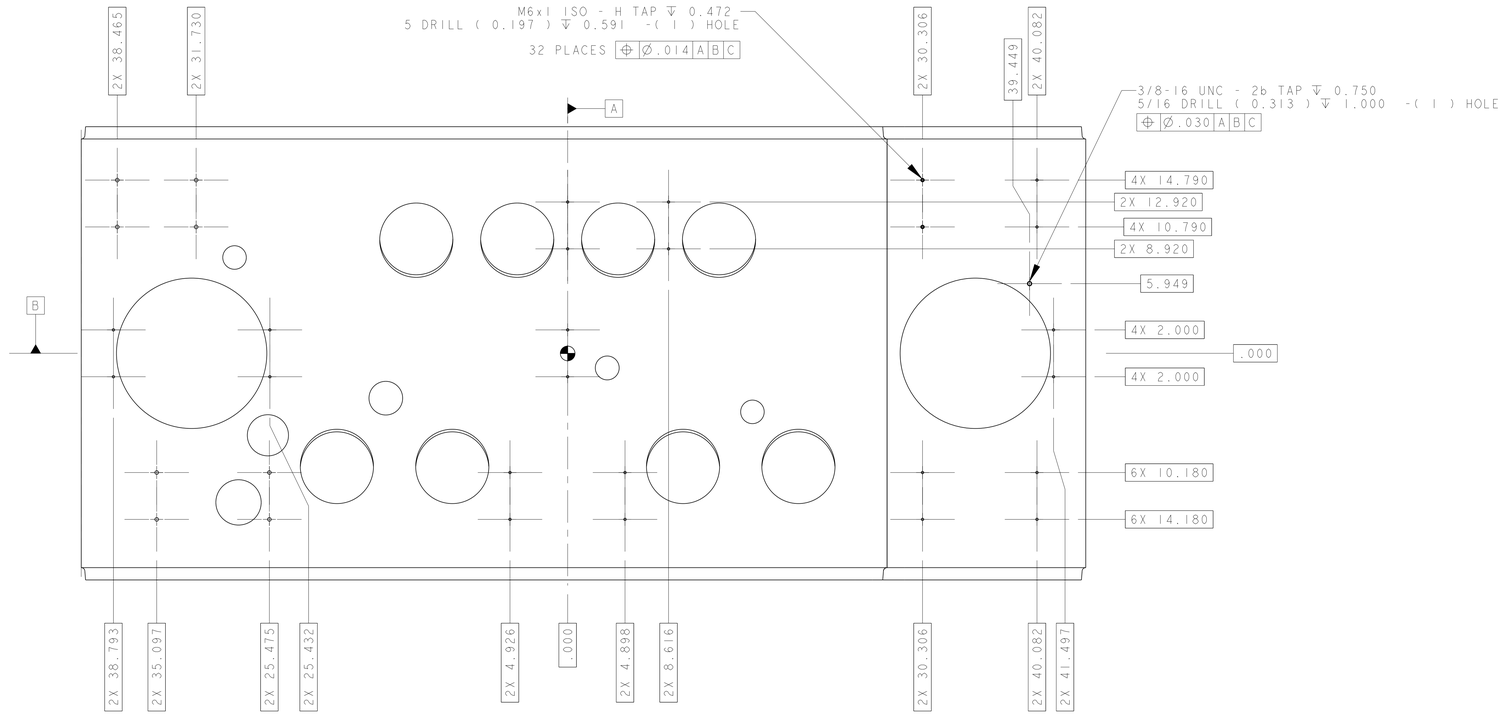

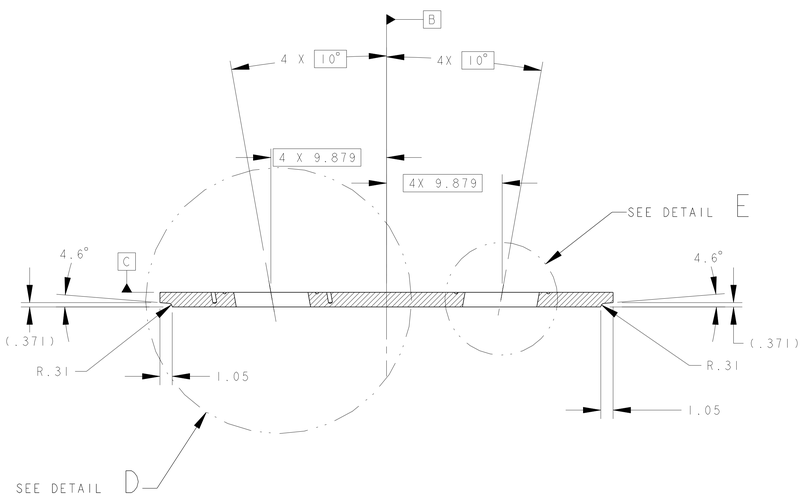

SECTION A - A
ROTATED 90° CW

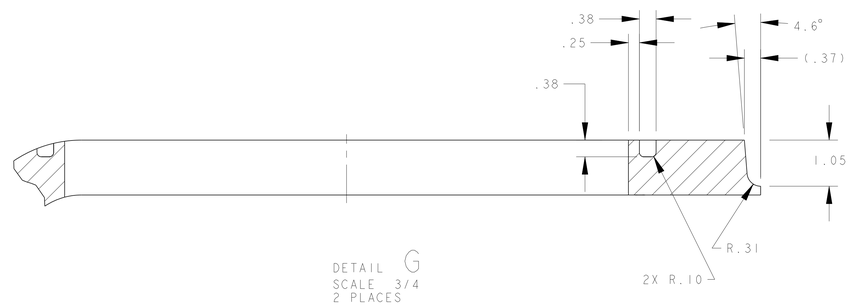

DETAIL G
SCALE 3/4
2 PLACES

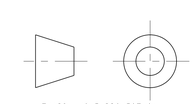

THIRD ANGLE PROJECTION

ERNEST ORLANDO LAWRENCE
BERKELEY NATIONAL LABORATORY
UNIVERSITY OF CALIFORNIA - BERKELEY

LHC IR FEEDBOX
VACUUM
TOP PLATE DFBX E, IP5 LEFT

MICROFILMED:	DWG. TYPE	SHOWN ON	SCALE: 1/5	DO NOT SCALE PRINTS
	PART	25i149	SHEET 2 OF 3	
PATENT CLEAR:	DESIGN ACCT. NO.	CATEGORY CODE	DWG. NO.	SIZE / REV.
	Z5LCE2	LH2002	2518766	B

DWG. NO. 2518766 SIZE B REV. 2

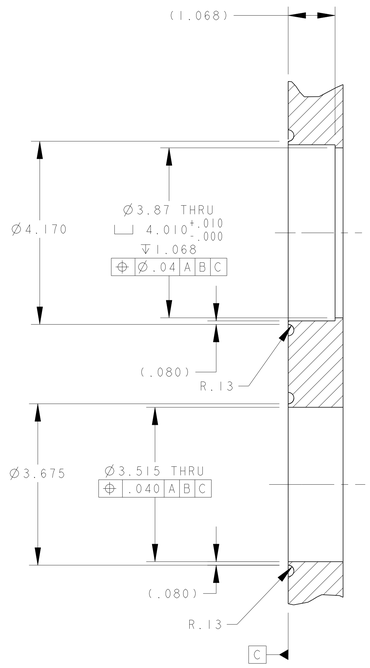

SECTION D - D
SCALE 3/4

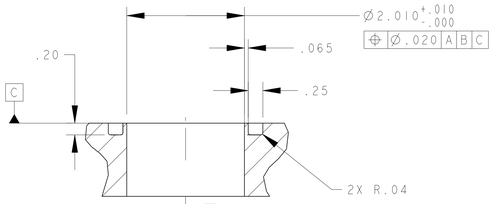

DETAIL F
SCALE 1/1

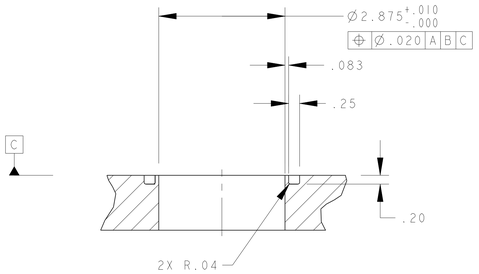

DETAIL J
SCALE 3/4

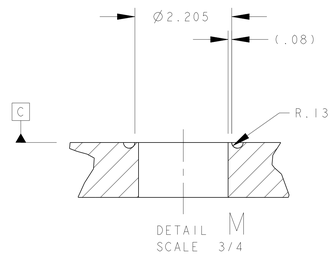

DETAIL M
SCALE 3/4

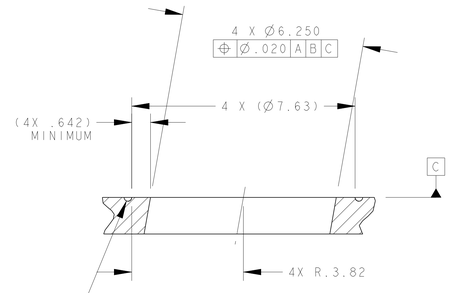

DETAIL E
SCALE 1/2

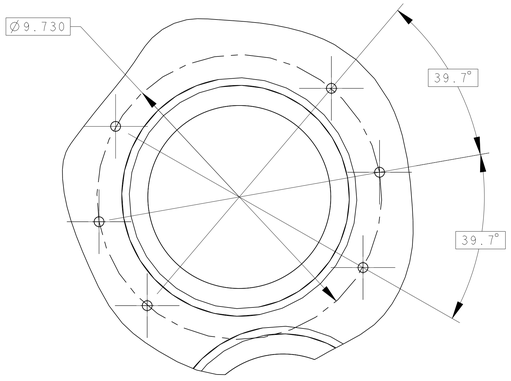

VIEW F - F
SCALE 1/2
4 PLACES

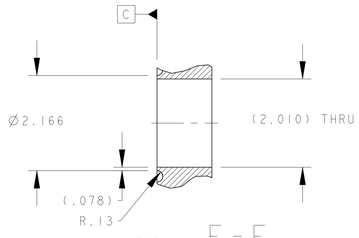

SECTION E - E
SCALE 3/4

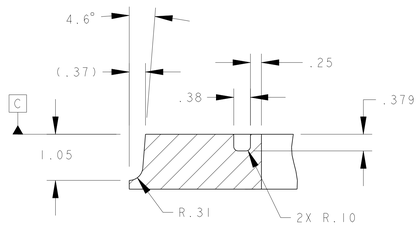

DETAIL K
SCALE 3/4

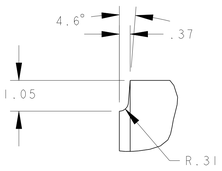

DETAIL L
SCALE 1/2
4 PLACES

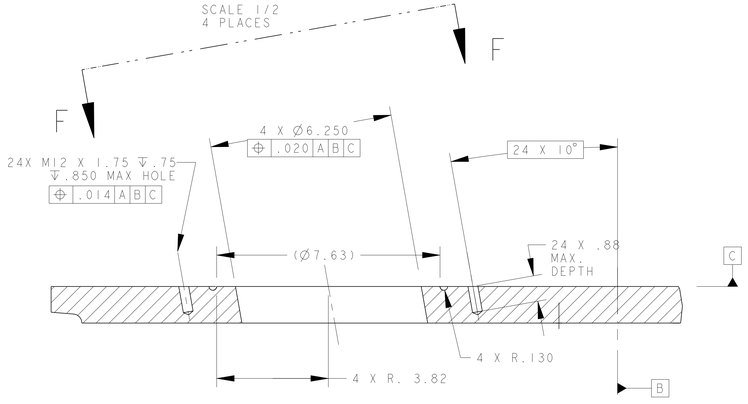

DETAIL D
SCALE 1/2

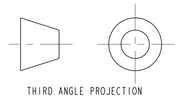

THIRD ANGLE PROJECTION

ERNEST ORLANDO LAWRENCE
BERKELEY NATIONAL LABORATORY
UNIVERSITY OF CALIFORNIA - BERKELEY

LHC IR FEEDBOX
VACUUM
TOP PLATE DFBX E, IP5 LEFT

MICROFILMED:	DWG. TYPE	SHOWN ON	SCALE: 1/5	DO NOT SCALE PRINTS
	PART	25i149	SHEET 3 OF 3	
PATENT CLEAR:	DESIGN ACCT. NO.	CATEGORY CODE	DWG. NO.	SIZE / REV.
	Z5LCE2	LH2002	2518766	B

DWG. NO. 2518766 B 3