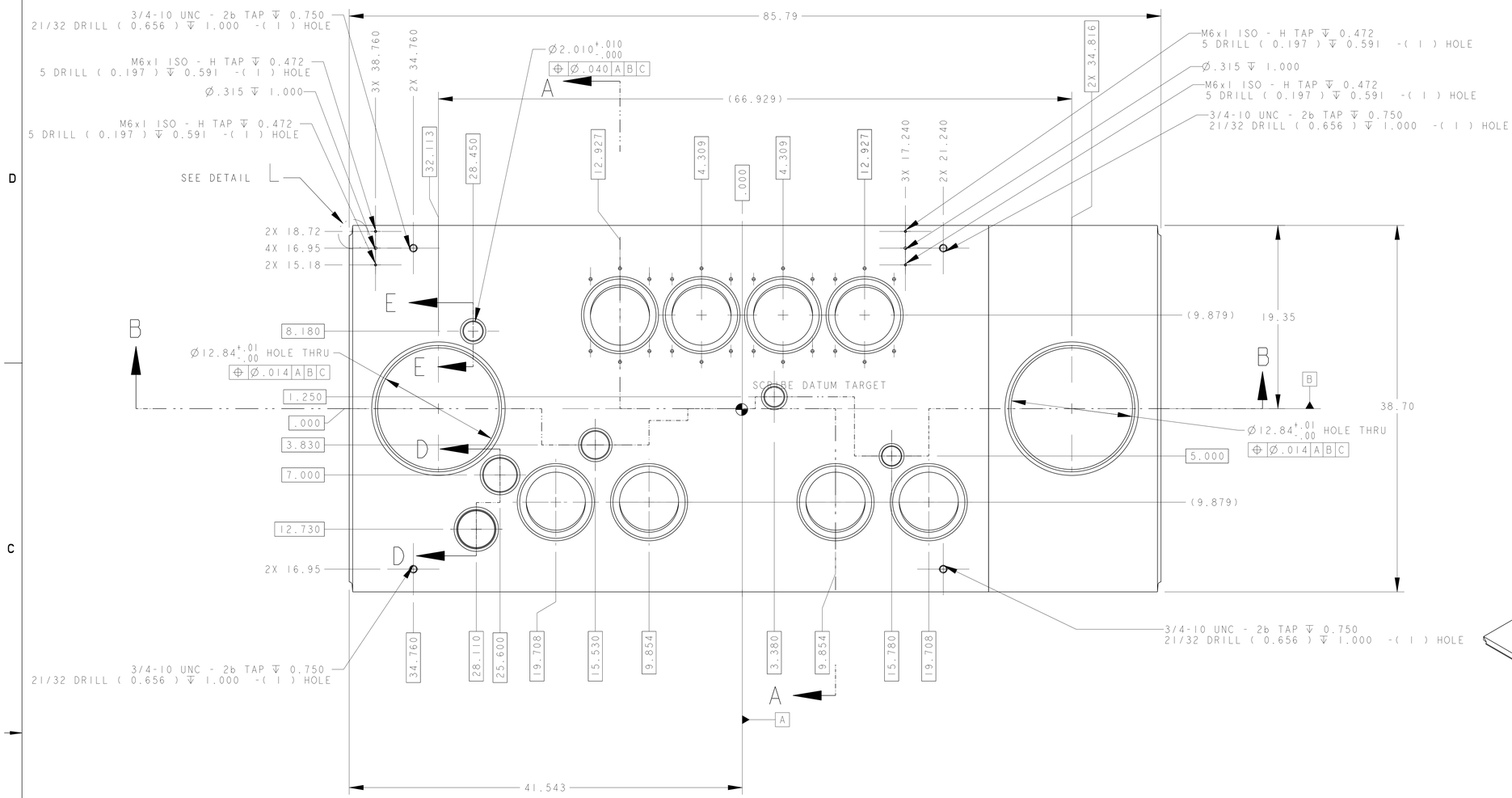

NOTES: UNLESS OTHERWISE SPECIFIED,

1. BLANCHARD GRIND PLATE, DATUM -C- SIDE BEFORE MACHINING MINIMUM CLEANUP.
2. DIMENSIONS AND TOLERANCING PER ANSI Y14.5M-1982 UNITS ARE IN INCHES UNLESS OTHERWISE SPECIFIED.
3. USE OF SULFUR OR SILICONE BEARING OILS, LUBRICANTS, OR COOLANTS ARE STRICTLY PROHIBITED
4. USE OF RESIN OR RUBBER BONDED ADRASIVES UNDER POWER IS STRICTLY PROHIBITED. USE VITREOUS BONDED ABRASIVES ONLY.
5. CLEANING SPECIFICATIONS FOR PARTS AND WELDMENTS TO BE PROVIDED BY VENDOR AND APPROVED BY LBNL.
6. PROTECT FINISHED PART BY BAGGING OR SIMILAR METHOD TO PROTECT AND MAINTAIN CLEANLINESS DURING SHIPMENT AND STORAGE.
7. VENDOR PROPOSED WELD PREPS MODIFICATIONS SUBJECT TO LBNL APPROVAL.
8. STRESS RELIEVE PART AFTER BENDING, PRIOR TO FINISH MACHINING.
9. ESTIMATED WEIGHT = 1,096 LBS

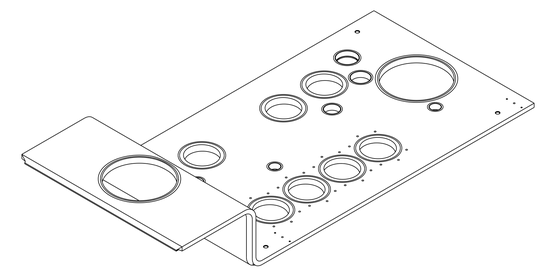

SCALE 1/10

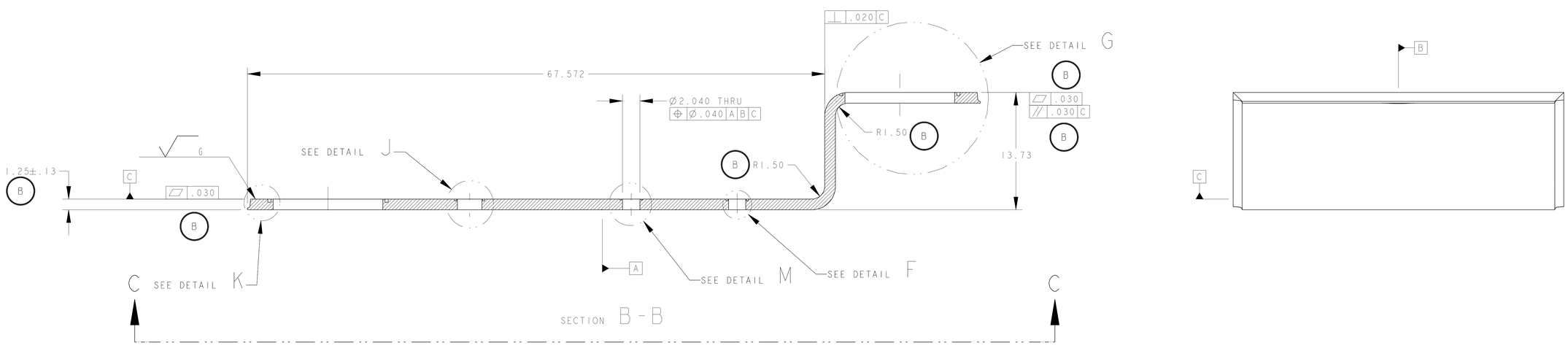

SECTION B - B

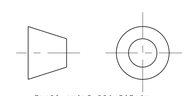

THIRD ANGLE PROJECTION

REV	DWG	CHK	ZONE	DATE	CHANGES
B	JDR	DPO		02/19/03	- INCREASED BEND RADIUS FROM 1.00, - INCREASED THICKNESS TOL. FROM 1.25 +/- .03, - ADDED TRUE POSITION TOL. TO HOLES (SHEET 2) - INCREASED FLATNESS TOLERANCE FROM .010, - INCREASED PARALLELISM FROM .020,
A	JDR	DPO		10/08/02	INITIAL RELEASE

DESCRIPTION	MATERIAL	MAT. LOCATION
PLATE, HOT ROLLED, ANNEALED, PICKLED PER ASTM A-240	304L SS	-

UNLESS OTHERWISE SPECIFIED
TOLERANCES: X.X ± 0.1 | FRAC. ± 1/64 | X.XX ± 0.03 | Angles ± 1.00° | X.XXX ± 0.010 | FINISH 125/
DO NOT SCALE PRINT
THREADS ARE CLASS 2
CHAMFER ENDS OF ALL SCREW TREADS 30°
CUT ROUND, 1.5 THREAD RELIEF ON MACHINED THREADS
BREAK EDGES .016 MAX. ON MACHINED WORK
REMOVE BURRS, WELD SPLATTER & LOOSE SCALE
IN ACCORDANCE WITH ASME Y14.5M & B46.1

SHOP ORDERS
ACCT NO. | NO. REQD | SER NO. -
DEL TO | DATE ISSD -
SURFACE TREATMT -
IDENT METHOD TAG
PROJECT NUMBER N/A
PROJECT NAME N/A
DWG BY KNOLLS | DATE 22-Aug-01
CHK BY JON ZBASNIK | DATE 04-APR-02
APR BY JON ZBASNIK | DATE 04-APR-02

ERNEST ORLANDO LAWRENCE BERKELEY NATIONAL LABORATORY
UNIVERSITY OF CALIFORNIA - BERKELEY

LHC IR FEEDBOX
VACUUM
TOP PLATE DFBX B IP1 RIGHT

MICROFILMED: | DWG. TYPE PART | SHOWN ON 251152 | SCALE: 1/5 | DO NOT SCALE PRINTS
PATENT CLEAR: | DESIGN ACCT. NO. Z5LCE2 | CATEGORY CODE LH2002 | DWG. NO. 2518756 | SIZE | REV. B
SHEET 1 OF 3

DWG. NO. 2518756 SIZE B REV. 1

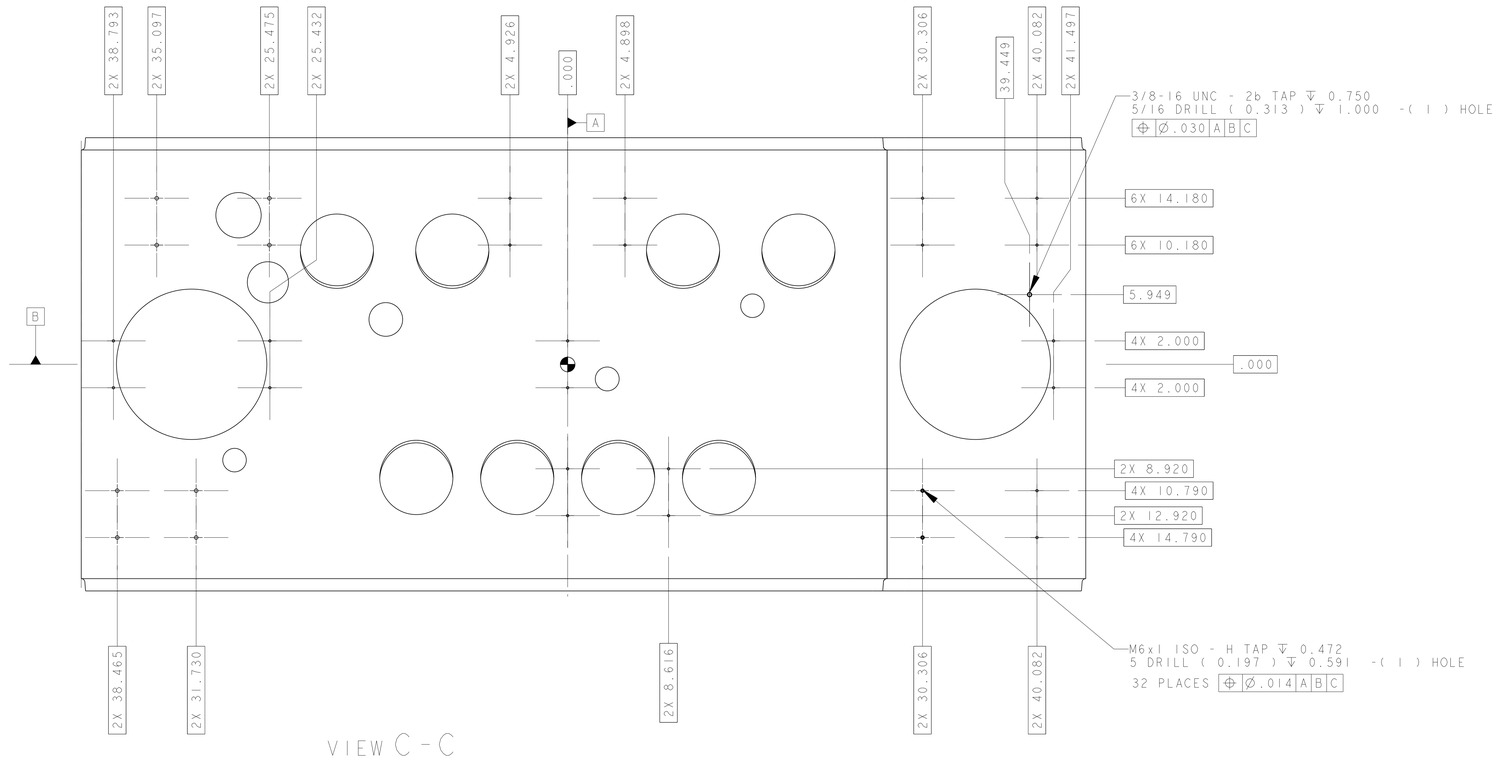

VIEW C - C

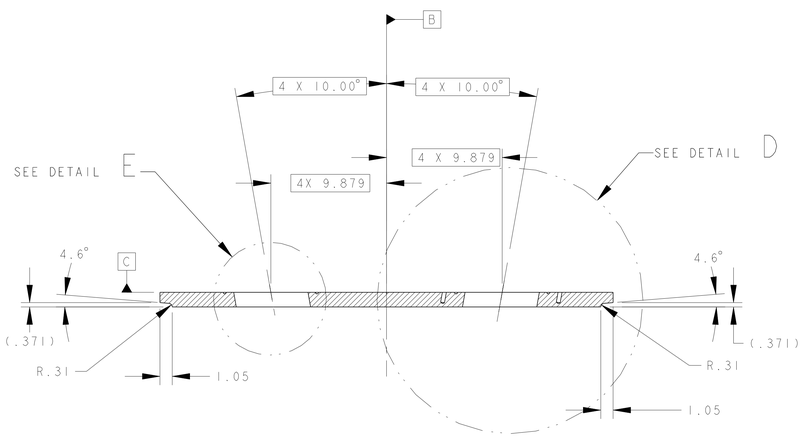

SECTION A - A
ROTATED 90° CW

DETAIL G
SCALE 3/4
2 PLACES

THIRD ANGLE PROJECTION

ERNEST ORLANDO LAWRENCE
BERKELEY NATIONAL LABORATORY
UNIVERSITY OF CALIFORNIA - BERKELEY

LHC IR FEEDBOX
VACUUM
TOP PLATE DFBX B 1P1 RIGHT

MICROFILMED:	DWG. TYPE	SHOWN ON	SCALE: 1/5	DO NOT SCALE PRINTS
	PART	251152	SHEET 2 OF 3	
PATENT CLEAR:	DESIGN ACCT. NO.	CATEGORY CODE	DWG. NO.	SIZE / REV.
	Z5LCE2	LH2002	2518756	B

DWG. NO. 2518756 SIZE/REV. B SH. 2

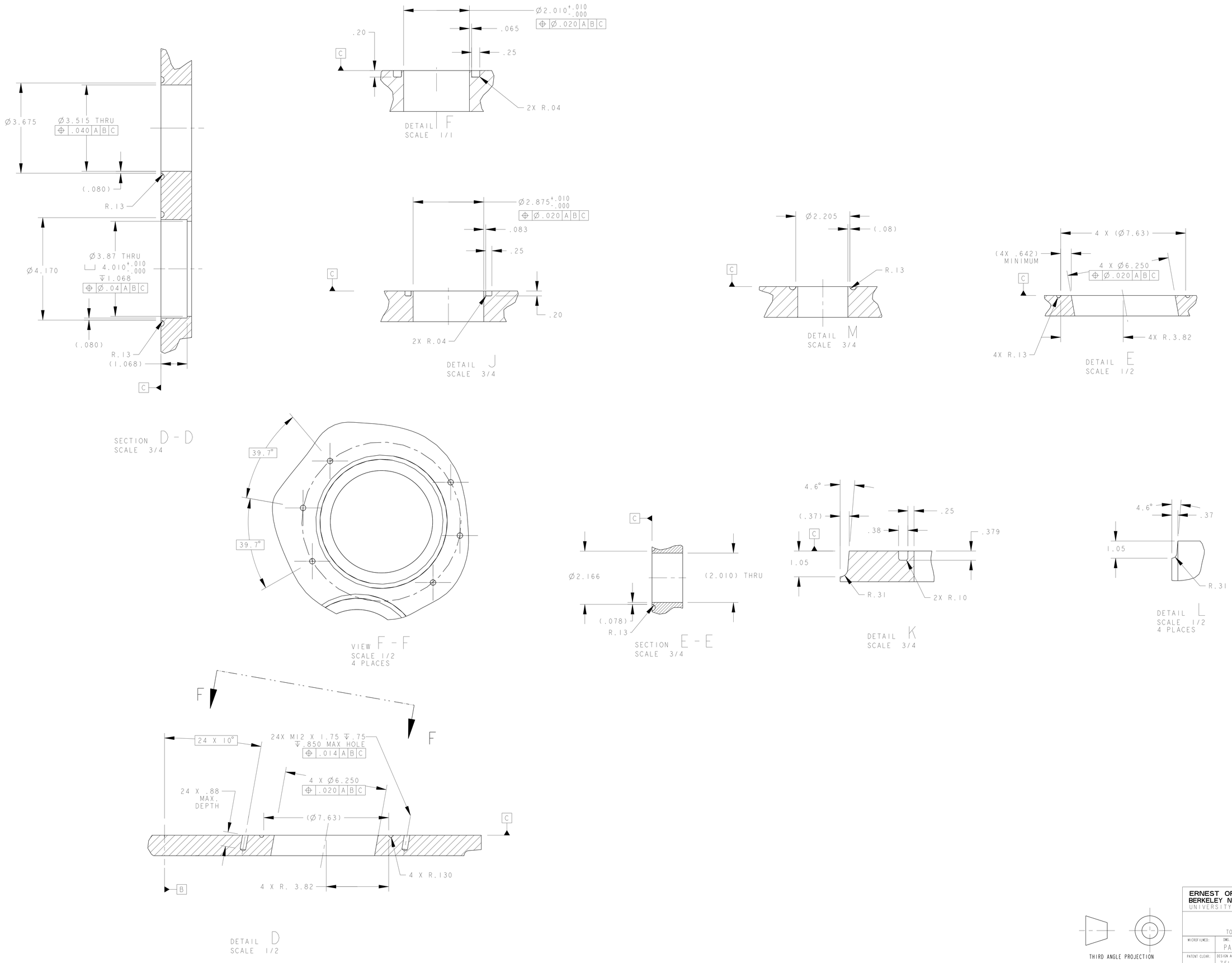

ERNEST ORLANDO LAWRENCE
BERKELEY NATIONAL LABORATORY
UNIVERSITY OF CALIFORNIA - BERKELEY

LHC IR FEEDBOX
VACUUM
TOP PLATE DFBX B IP1 RIGHT

MICROFILMED:	DWG. TYPE	SHOWN ON	SCALE: 1/5	DO NOT SCALE PRINTS
	PART	251152	SHEET 3 OF 3	
PATENT CLEAR:	DESIGN ACCT. NO.	CATEGORY CODE	DWG. NO.	SIZE / REV.
	Z5LCE2	LH2002	2518756	B

DWG. NO. 2518756 SIZE B REV. 3