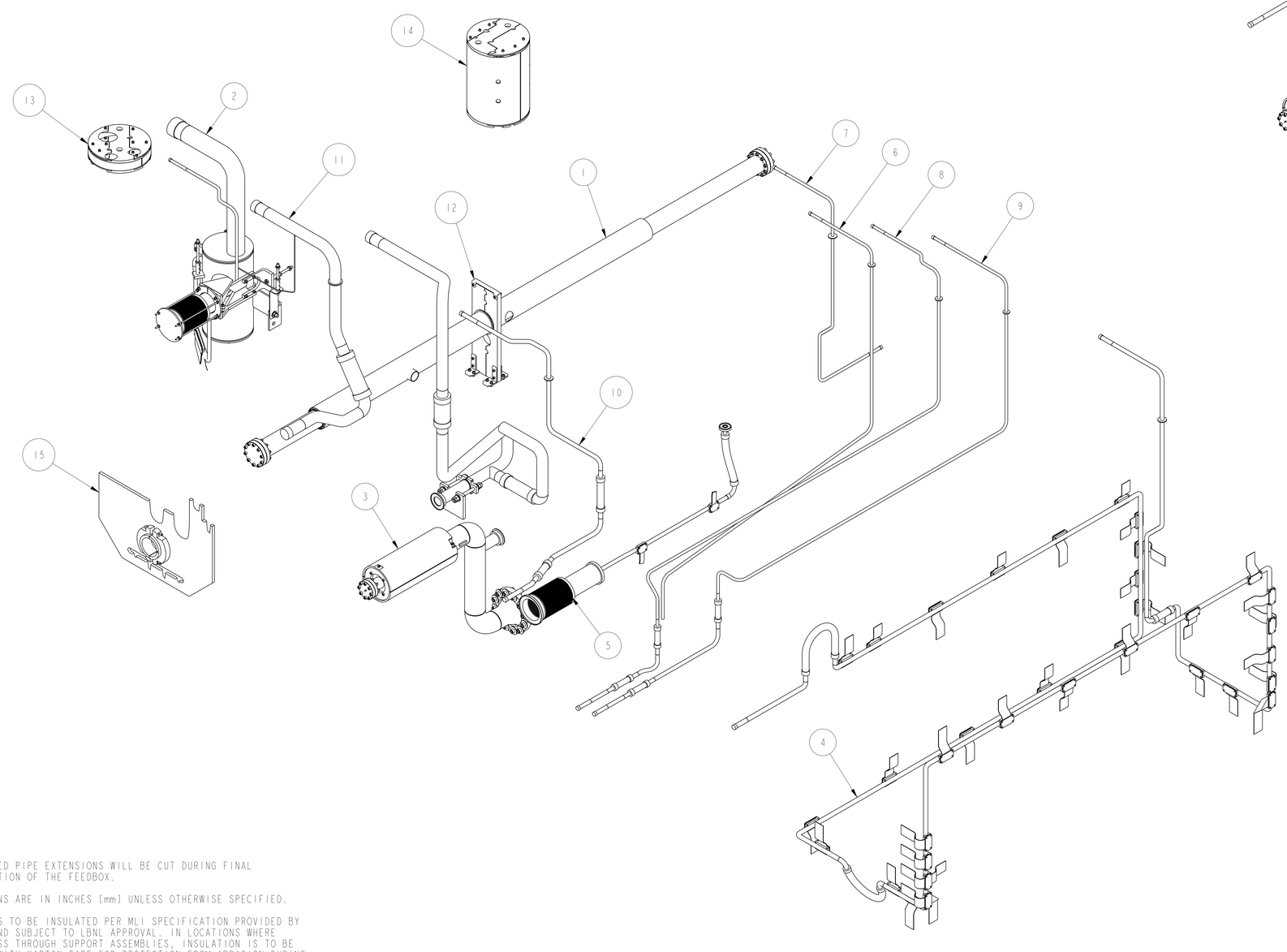

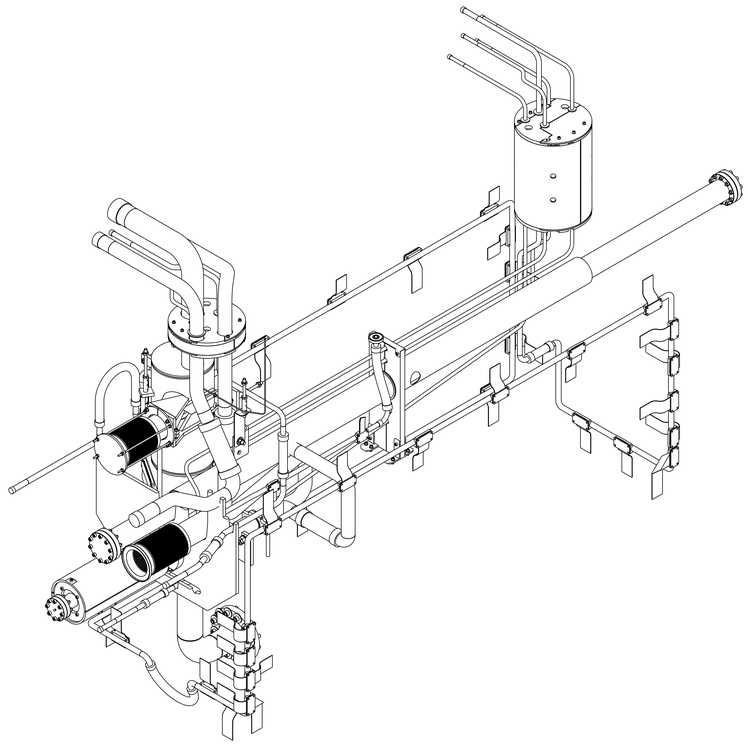

NOTES:

1. ALL CAPPED PIPE EXTENSIONS WILL BE CUT DURING FINAL INSTALLATION OF THE FEEDBOX.
2. DIMENSIONS ARE IN INCHES [mm] UNLESS OTHERWISE SPECIFIED.
3. ALL PIPES TO BE INSULATED PER MLI SPECIFICATION PROVIDED BY VENDOR AND SUBJECT TO LBNL APPROVAL. IN LOCATIONS WHERE PIPES PASS THROUGH SUPPORT ASSEMBLIES, INSULATION IS TO BE WRAPPED WITH KAPTON TAPE FOR PROTECTION FROM ABRASION DURING THERMAL CYCLING.

THIRD ANGLE PROJECTION

ITEM	PART NO	REQD	DESCRIPTION	MATERIAL
15	251412	1	SUPPORT, Q3 SIDE, DFBXA / DFBXF	NEMA G10
14	251202	1	SUPPORT, QQSB, DFBXF	NEMA G10
13	251201	1	SUPPORT, QQSA, DFBXF	NEMA G10
12	251623	1	SUPPORT, CENTER PIPE, DFBXF	-
11	251570	1	PIPE, LD2	-
10	251540	1	PIPE, E1	-
9	251531	1	PIPE, KD2	-
8	251529	1	PIPE, CC2	-
7	251528	1	PIPE, CC3	-
6	251519	1	PIPE, CC1	-
5	251301	1	PIPE, MQX2	-
4	251538	1	PIPE, EX	-
3	251554	1	PIPE WELDMENT, LD1 AND BUS DUCT	-
2	251545	1	PIPE, XB DFBXF	-
1	251510	1	V PIPE & JACKET ASSEMBLY	-

REV	DWG	CHK	ZONE	DATE	CHANGES
B	ARH	DPO		02/20/03	UPDATED SUBASSEMBLY VIEWS
A	MJK	DPO		11/25/02	INITIAL RELEASE

UNLESS OTHERWISE SPECIFIED

TOLERANCES		
	X.X ± 0.1	FRAC. ± 1/64
	X.XX ± 0.03	Angles ± 1.00°
	X.XXX ± 0.010	FINISH 125/1000

DO NOT SCALE PRINT

THREADS ARE CLASS 2
CHAMFER ENDS OF ALL SCREW TREADS 30°
CUT ROUND, 1.5 THREAD RELIEF ON MACHINED THREADS
BREAK EDGES .016 MAX. ON MACHINED WORK
REMOVE BURRS, WELD SPLATTER & LOOSE SCALE
IN ACCORDANCE WITH ASME Y14.5M & B46.1

SHOP ORDERS

ACCT NO.	NO. REQD	SER NO.	-
DEL TO		DATE ISSD	-
		DATE REQD	-
SURFACE TREATMT	-		
IDENT METHOD	TAG		
PROJECT NUMBER	N/A		
PROJECT NAME	N/A		
DWG BY	KNOLLS	DATE	27-Nov-02
CHK BY	D.OSHATZ	DATE	11/25/02
APR BY	D.OSHATZ	DATE	11/25/02

ERNEST ORLANDO LAWRENCE
BERKELEY NATIONAL LABORATORY
UNIVERSITY OF CALIFORNIA - BERKELEY

LHC IR FEEDBOX
CRYOGENICS
PIPING, DFBXF, IP5, RIGHT 24C395

MICROFILMED:	DWG. TYPE	SHOWN ON	SCALE: 0.125	DO NOT SCALE PRINTS
	ASSEM	.	SHEET 1 OF 11	
PATENT CLEAR:	DESIGN ACCT. NO.	CATEGORY CODE	DWG. NO.	SIZE / REV.
	Z5LCE2	LH2001	25i8746	B

DWG. NO. 25i8746 SIZE B REV. 1

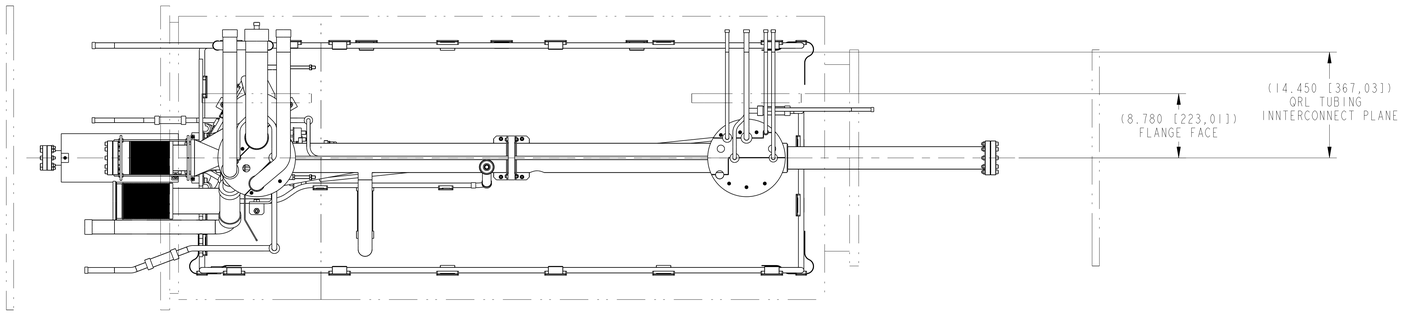

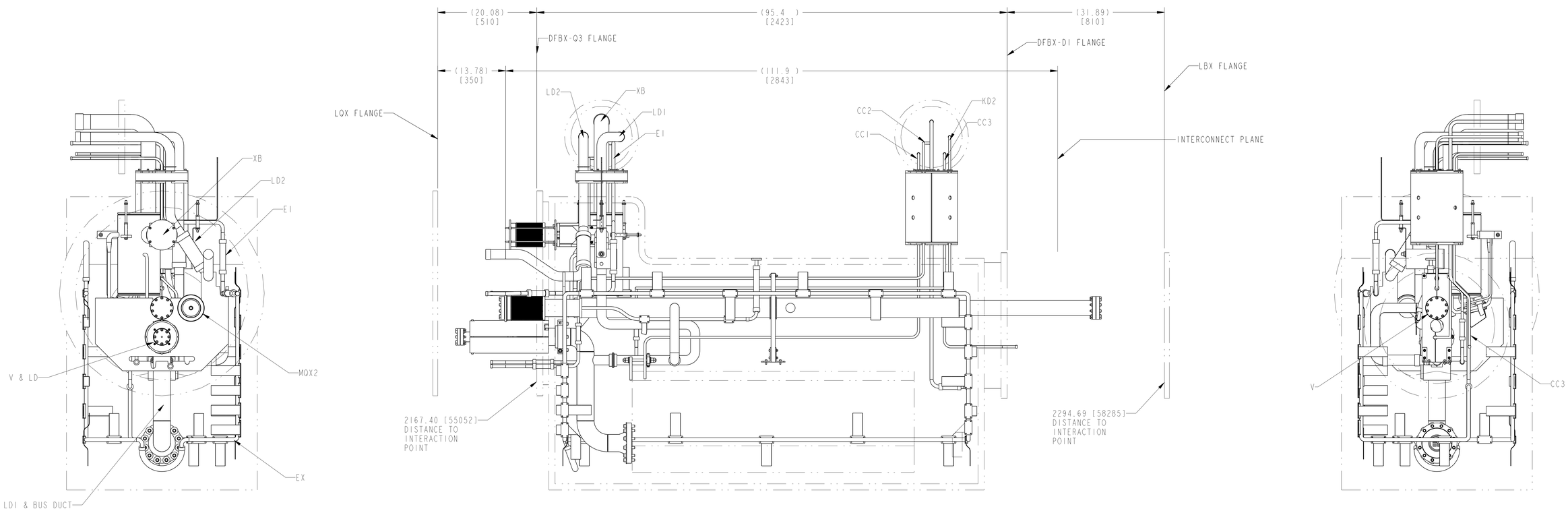

ERNEST ORLANDO LAWRENCE
BERKELEY NATIONAL LABORATORY
UNIVERSITY OF CALIFORNIA - BERKELEY

LHC IR FEEDBOX
CRYOGENICS
PIPING, DFBXF, IP5, RIGHT 24C395

MICROFILMED:	DWG. TYPE	SHOWN ON	SCALE: 0.125	DO NOT SCALE PRINTS
	ASSEM	.	SHEET 2 OF 11	
PATENT CLEAR:	DESIGN ACCT. NO.	CATEGORY CODE	DWG. NO.	SIZE / REV.
	Z5LCE2	LH2001	25i8746	B

DWG. NO. 25i8746 SIZE B SHT. 2

INSTRUMENTATION LINES

SHOWN FOR REFERENCE ONLY
NOTE: ALL WELDS MUST LEAVE TUBE
INTERIOR BURR FREE

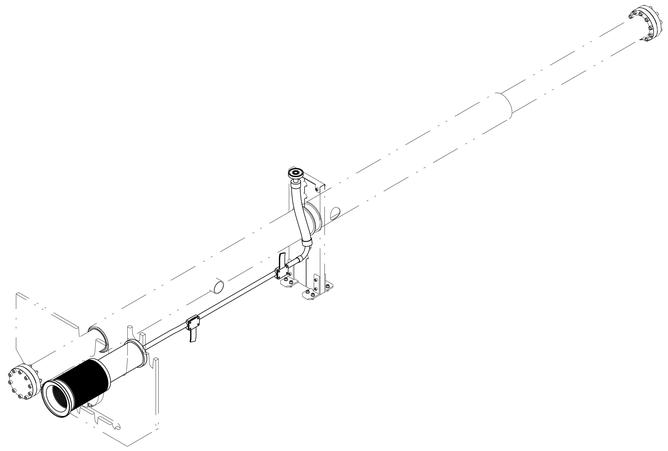

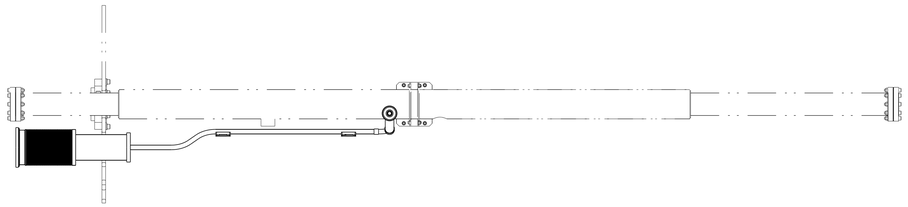

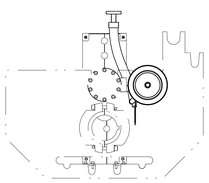

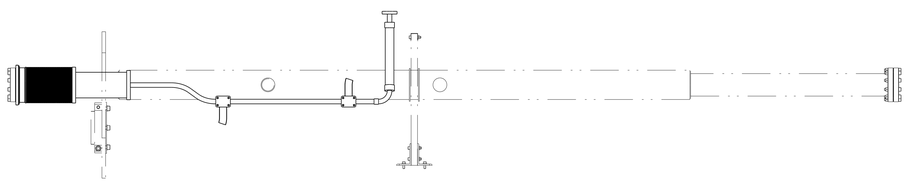

ERNEST ORLANDO LAWRENCE
BERKELEY NATIONAL LABORATORY
UNIVERSITY OF CALIFORNIA - BERKELEY

LHC IR FEEDBOX
CRYOGENICS
PIPING, DFBXF, IP5, RIGHT 24C395

MICROFILMED:	DWG. TYPE	SHOWN ON	SCALE: 0.125	DO NOT SCALE PRINTS
	ASSEM		SHEET 3 OF 11	
PATENT CLEAR:	DESIGN ACCT. NO.	CATEGORY CODE	DWG. NO.	SIZE	REV.
	Z5LCE2	LH2001	25i8746		B

DWG. NO. 25i8746 SIZE B REV. 3

LD LINES

SHOWN FOR REFERENCE ONLY

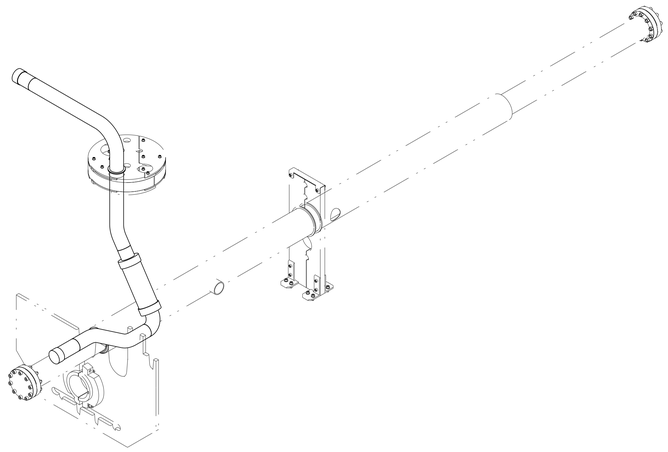

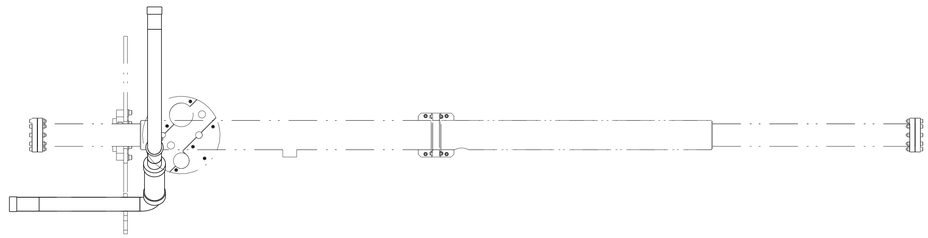

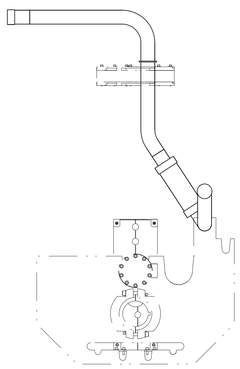

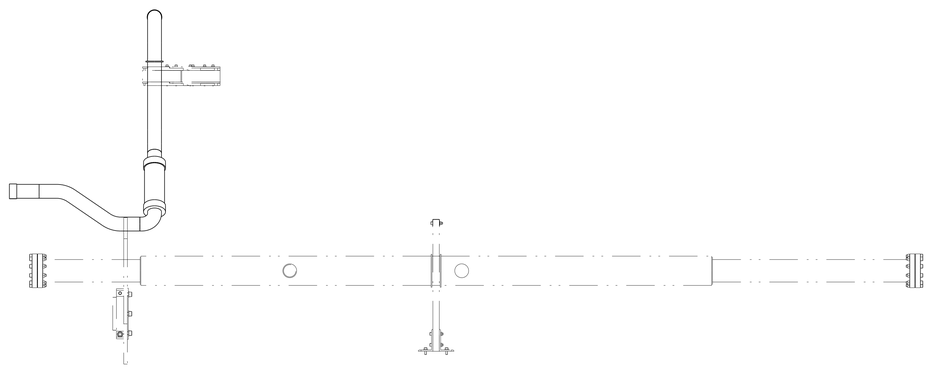

ERNEST ORLANDO LAWRENCE
BERKELEY NATIONAL LABORATORY
UNIVERSITY OF CALIFORNIA - BERKELEY

LHC IR FEEDBOX
CRYOGENICS
PIPING, DFBXF, IP5, RIGHT 24C395

MICROFILMED:	DWG. TYPE	SHOWN ON	SCALE: 0.125	DO NOT SCALE PRINTS
	ASSEM	.	SHEET 4 OF 11	
PATENT CLEAR:	DESIGN ACCT. NO.	CATEGORY CODE	DWG. NO.	SIZE / REV.
	Z5LCE2	LH2001	25i8746	B

DWG. NO. 25i8746 SIZE B REV. 4

CC LINES

SHOWN FOR REFERENCE ONLY

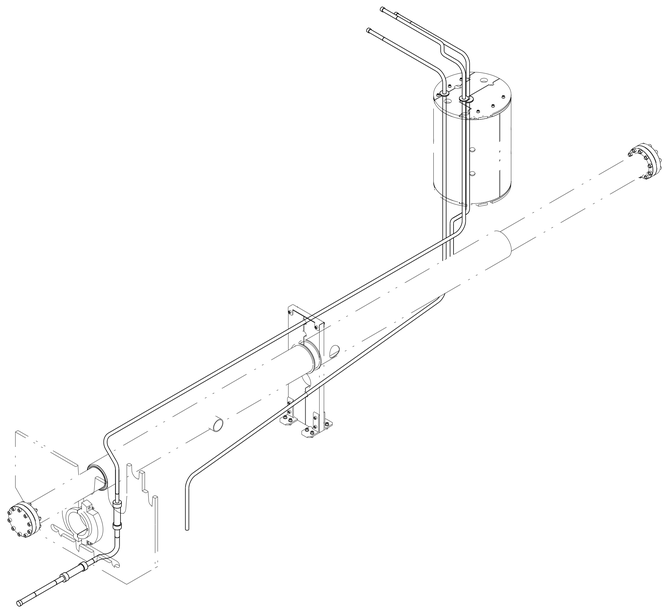

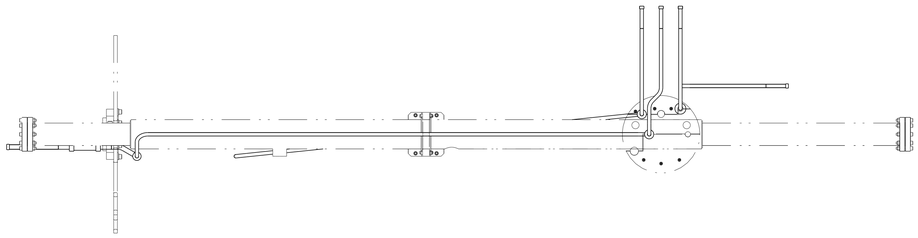

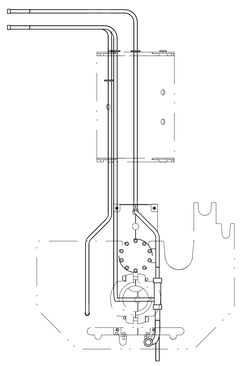

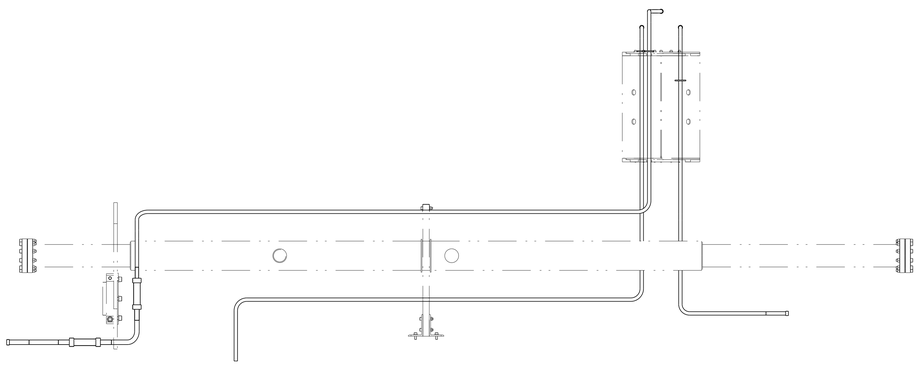

ERNEST ORLANDO LAWRENCE
BERKELEY NATIONAL LABORATORY
UNIVERSITY OF CALIFORNIA - BERKELEY

LHC IR FEEDBOX
CRYOGENICS
PIPING, DFBXF, IP5, RIGHT 24C395

MICROFILMED:	DWG. TYPE	SHOWN ON	SCALE: 0.125	DO NOT SCALE PRINTS
	ASSEM	-	SHEET 5 OF 11	
PATENT CLEAR:	DESIGN ACCT. NO.	CATEGORY CODE	DWG. NO.	SIZE / REV.
	Z5LCE2	LH2001	25i8746	B

DWG. NO. 25i8746 SIZE / REV. B SH. 5

KD2 LINE

SHOWN FOR REFERENCE ONLY

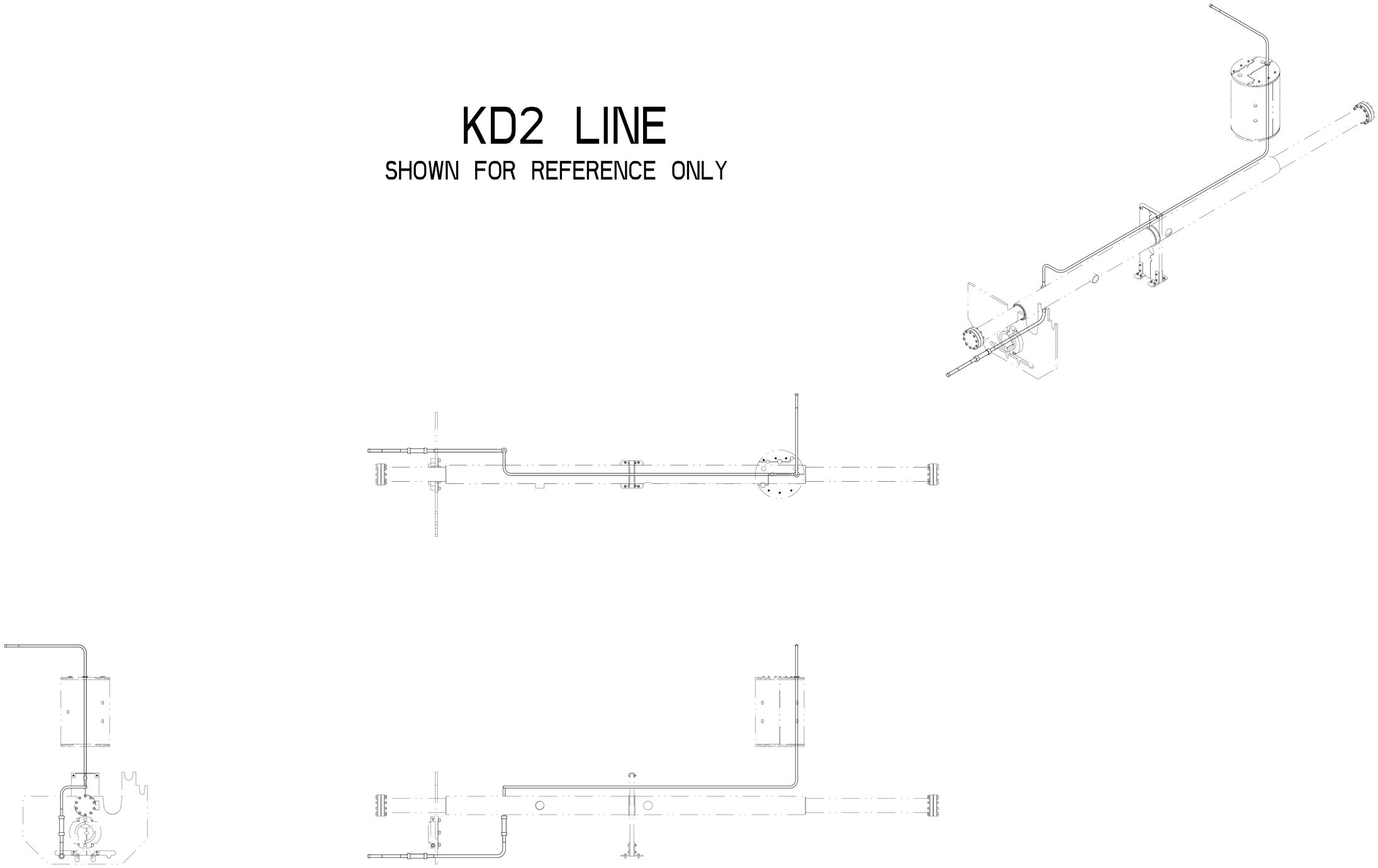

ERNEST ORLANDO LAWRENCE
BERKELEY NATIONAL LABORATORY
UNIVERSITY OF CALIFORNIA - BERKELEY

LHC IR FEEDBOX
CRYOGENICS
PIPING, DFBXF, IP5, RIGHT 24C395

MICROFILMED:	DWG. TYPE	SHOWN ON	SCALE: 0.125	DO NOT SCALE PRINTS
	ASSEM	.	SHEET 6 OF 11	
PATENT CLEAR:	DESIGN ACCT. NO.	CATEGORY CODE	DWG. NO.	SIZE / REV.
	Z5LCE2	LH2001	25i8746	B

DWG. NO. 25i8746 SIZE B REV. 6

E1 LINE

SHOWN FOR REFERENCE ONLY

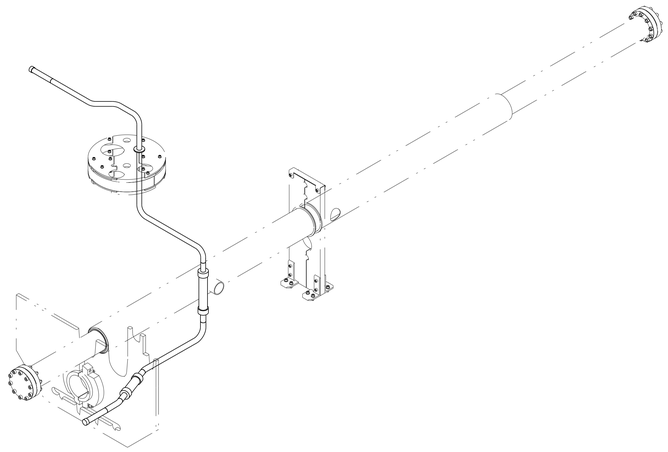

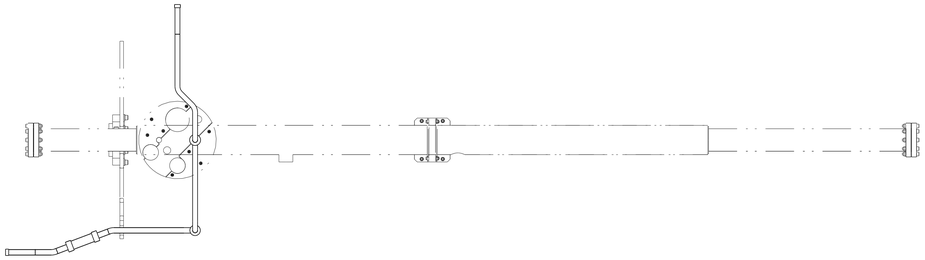

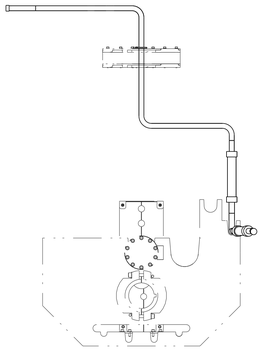

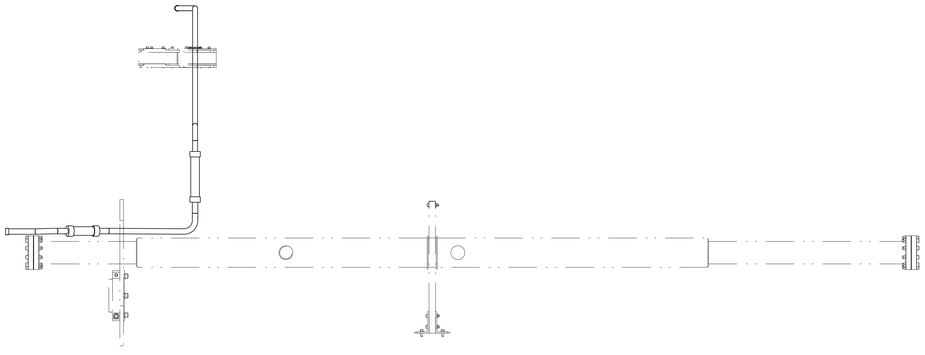

ERNEST ORLANDO LAWRENCE
BERKELEY NATIONAL LABORATORY
UNIVERSITY OF CALIFORNIA - BERKELEY

LHC IR FEEDBOX
CRYOGENICS
PIPING, DFBXF, IP5, RIGHT 24C395

MICROFILMED:	DWG. TYPE	SHOWN ON	SCALE: 0.125	DO NOT SCALE PRINTS
	ASSEM	-	SHEET 7 OF 11	
PATENT CLEAR:	DESIGN ACCT. NO.	CATEGORY CODE	DWG. NO.	SIZE / REV.
	Z5LCE2	LH2001	25i8746	B

DWG. NO. 25i8746 SIZE / REV. B SH. 7

EX LINE

SHOWN FOR REFERENCE ONLY

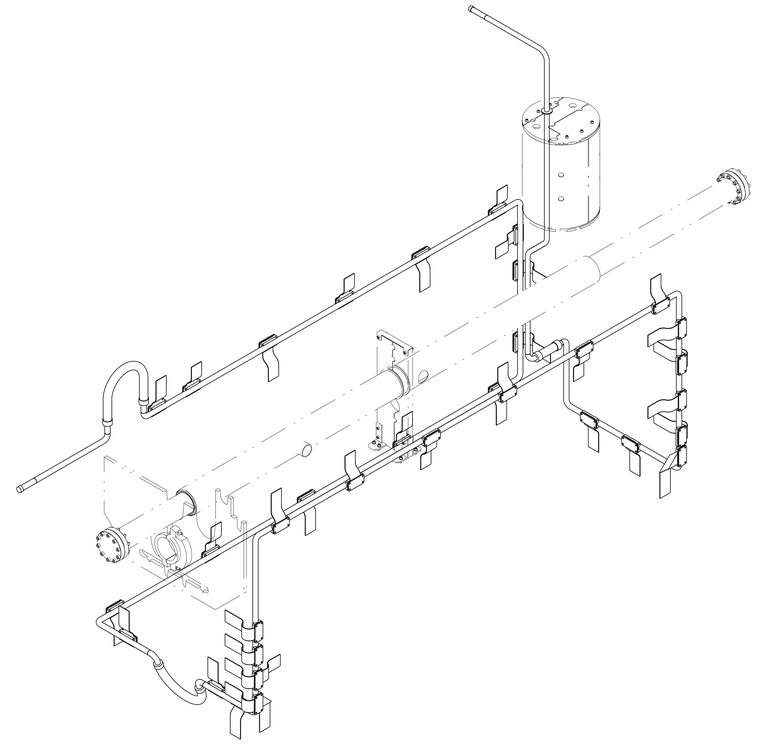

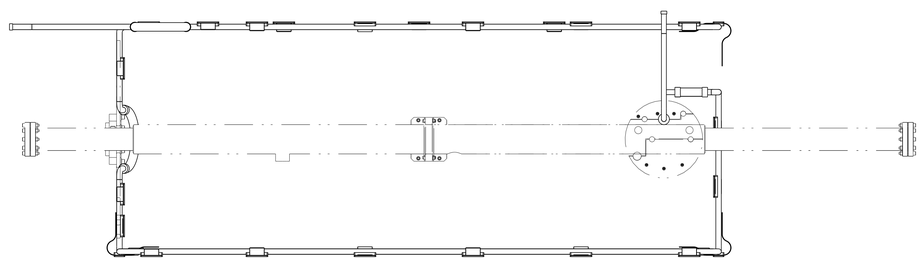

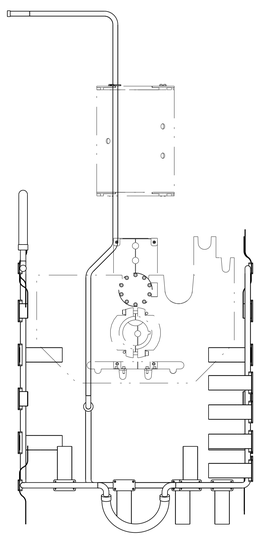

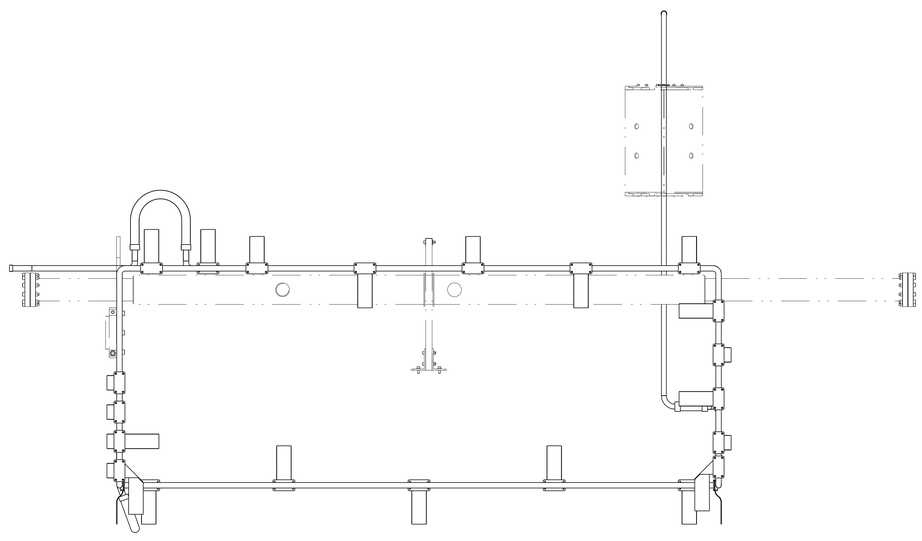

ERNEST ORLANDO LAWRENCE
BERKELEY NATIONAL LABORATORY
UNIVERSITY OF CALIFORNIA - BERKELEY

LHC IR FEEDBOX
CRYOGENICS
PIPING, DFBXF, IP5, RIGHT 24C395

MICROFILMED:	DWG. TYPE	SHOWN ON	SCALE: 0.125	DO NOT SCALE PRINTS
	ASSEM	.	SHEET 8 OF 11	
PATENT CLEAR:	DESIGN ACCT. NO.	CATEGORY CODE	DWG. NO.	SIZE / REV.
	Z5LCE2	LH2001	2518746	B

DWG. NO. 2518746 B 8

XB & CY LINES

SHOWN FOR REFERENCE ONLY

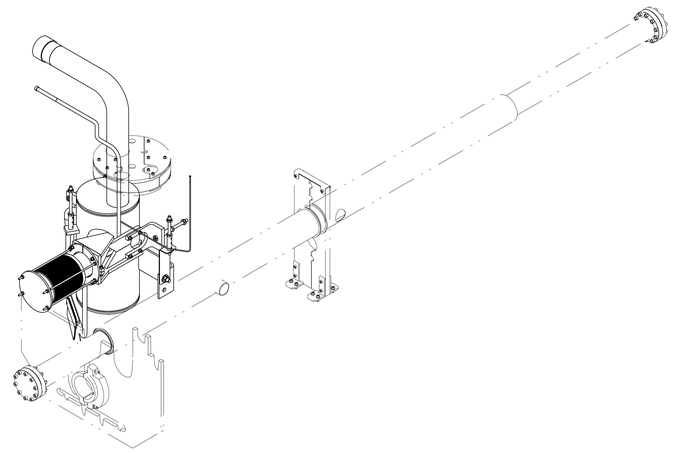

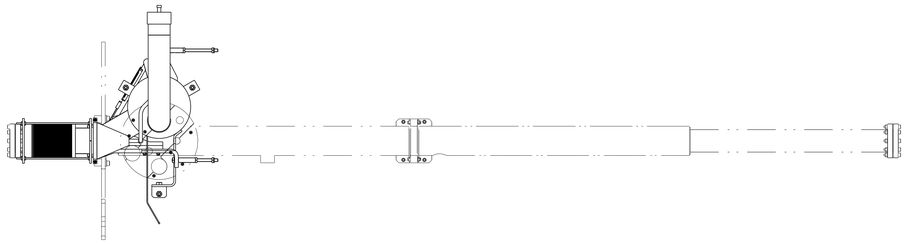

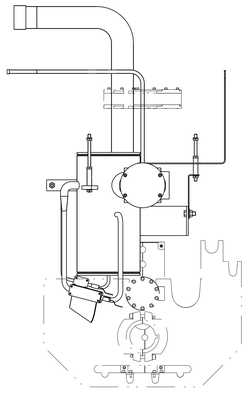

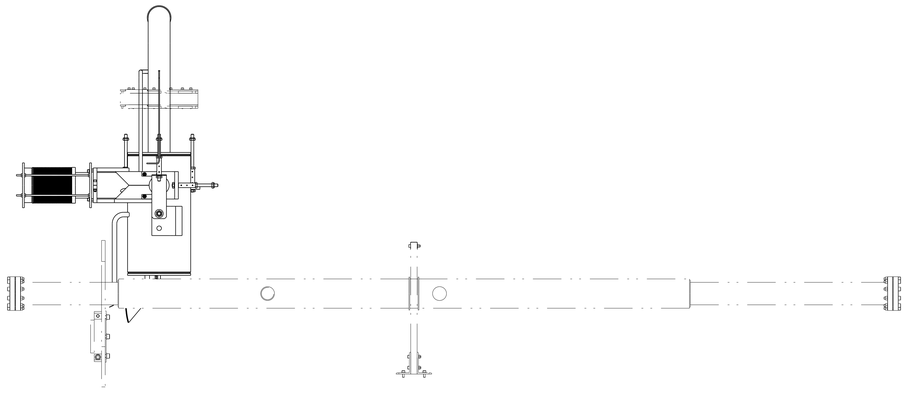

ERNEST ORLANDO LAWRENCE
BERKELEY NATIONAL LABORATORY
UNIVERSITY OF CALIFORNIA - BERKELEY

LHC IR FEEDBOX
CRYOGENICS
PIPING, DFBXF, IP5, RIGHT 24C395

MICROFILMED:	DWG. TYPE	SHOWN ON	SCALE: 0.125	DO NOT SCALE PRINTS
	ASSEM	.	SHEET 9 OF 11	
PATENT CLEAR:	DESIGN ACCT. NO.	CATEGORY CODE	DWG. NO.	SIZE / REV.
	Z5LCE2	LH2001	25i8746	B

DWG. NO. 25i8746 SIZE B REV. 9

BEAM TUBE

SHOWN FOR REFERENCE ONLY

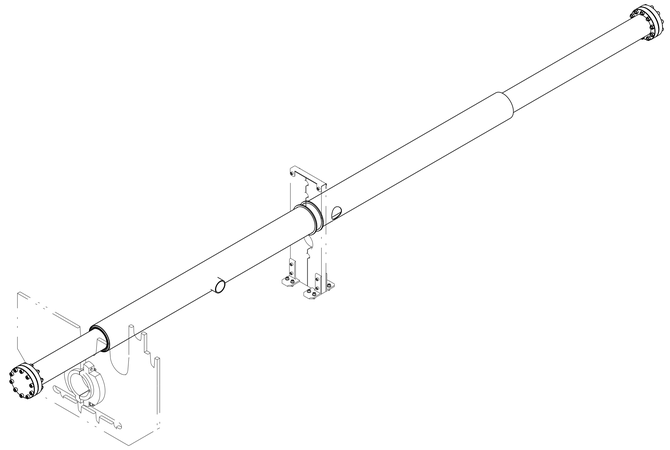

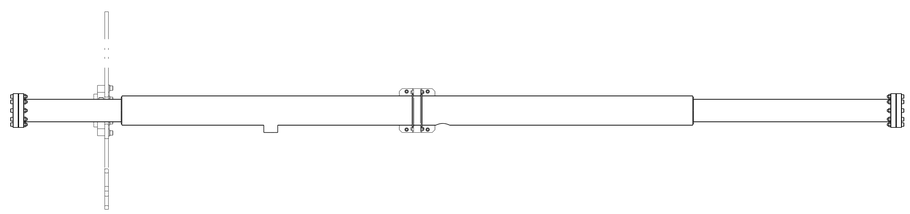

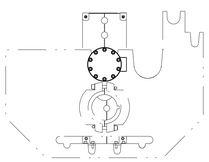

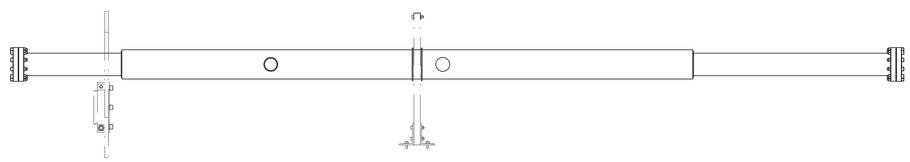

THIRD ANGLE PROJECTION

ERNEST ORLANDO LAWRENCE
BERKELEY NATIONAL LABORATORY
UNIVERSITY OF CALIFORNIA - BERKELEY

LHC IR FEEDBOX
CRYOGENICS
PIPING, DFBXF, IP5, RIGHT 24C395

MICROFILMED:	DWG. TYPE: ASSEM	SHOWN ON:	SCALE: 0.125	DO NOT SCALE PRINTS
			SHEET 10 OF 11	
PATENT CLEAR:	DESIGN ACCT. NO.: Z5LCE2	CATEGORY CODE: LH2001	DWG. NO.: 25i8746	SIZE: REV.: B

DWG. NO. 25i8746 SHEET REV. 10 B

BUS DUCT ASSEMBLY

SHOWN FOR REFERENCE ONLY

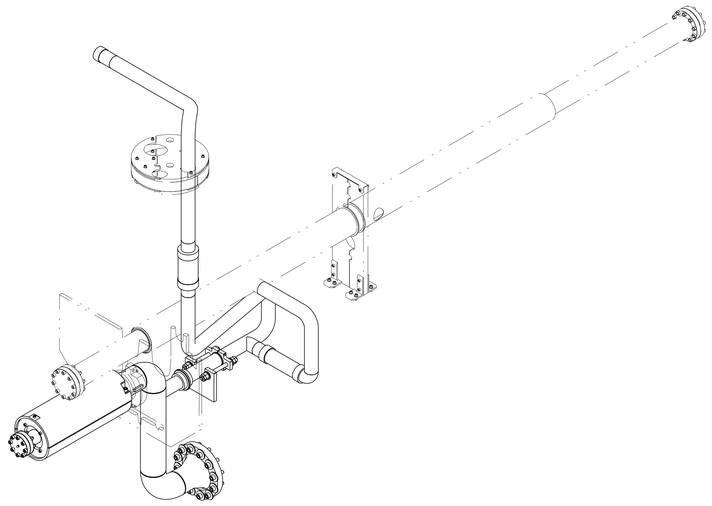

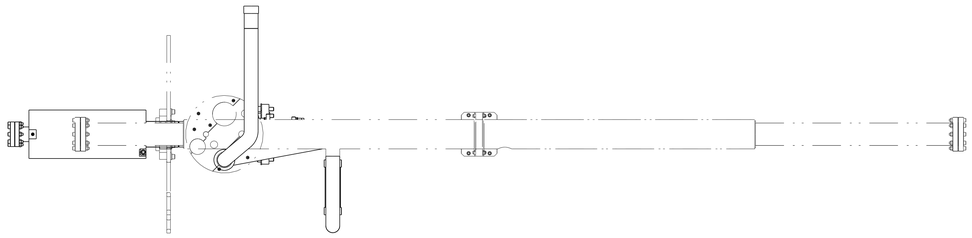

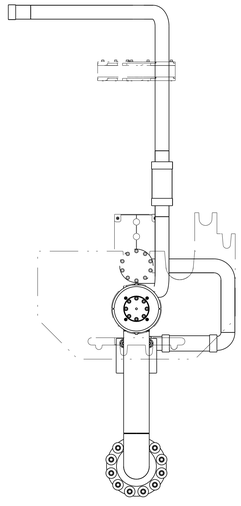

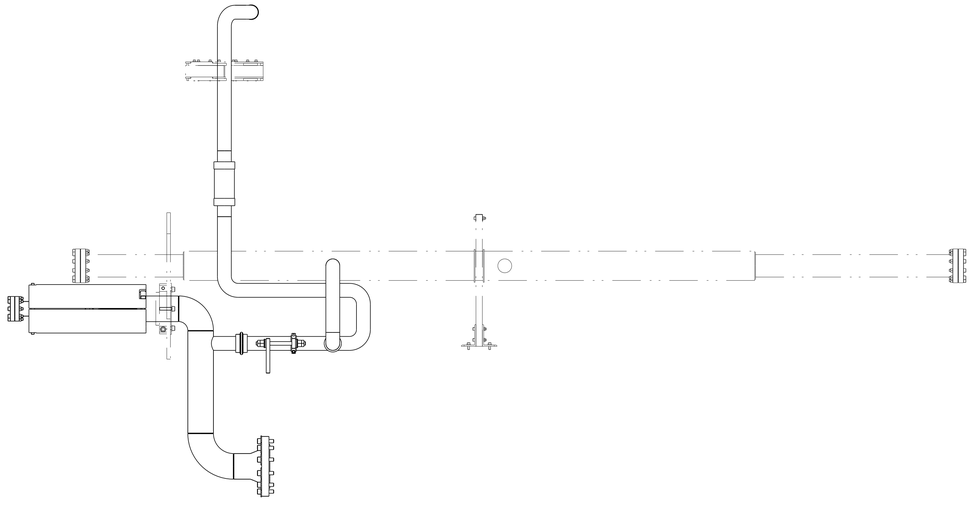

ERNEST ORLANDO LAWRENCE
BERKELEY NATIONAL LABORATORY
UNIVERSITY OF CALIFORNIA - BERKELEY

LHC IR FEEDBOX
CRYOGENICS
PIPING, DFBXF, IP5, RIGHT 24C395

MICROFILMED:	DWG. TYPE: ASSEM	SHOWN ON: .	SCALE: 0.125	DO NOT SCALE PRINTS
			SHEET 11 OF 11	
PATENT CLEAR:	DESIGN ACCT. NO.: Z5LCE2	CATEGORY CODE: LH2001	DWG. NO.: 25i8746	SIZE: B / REV.

DWG. NO. 25i8746 B 11