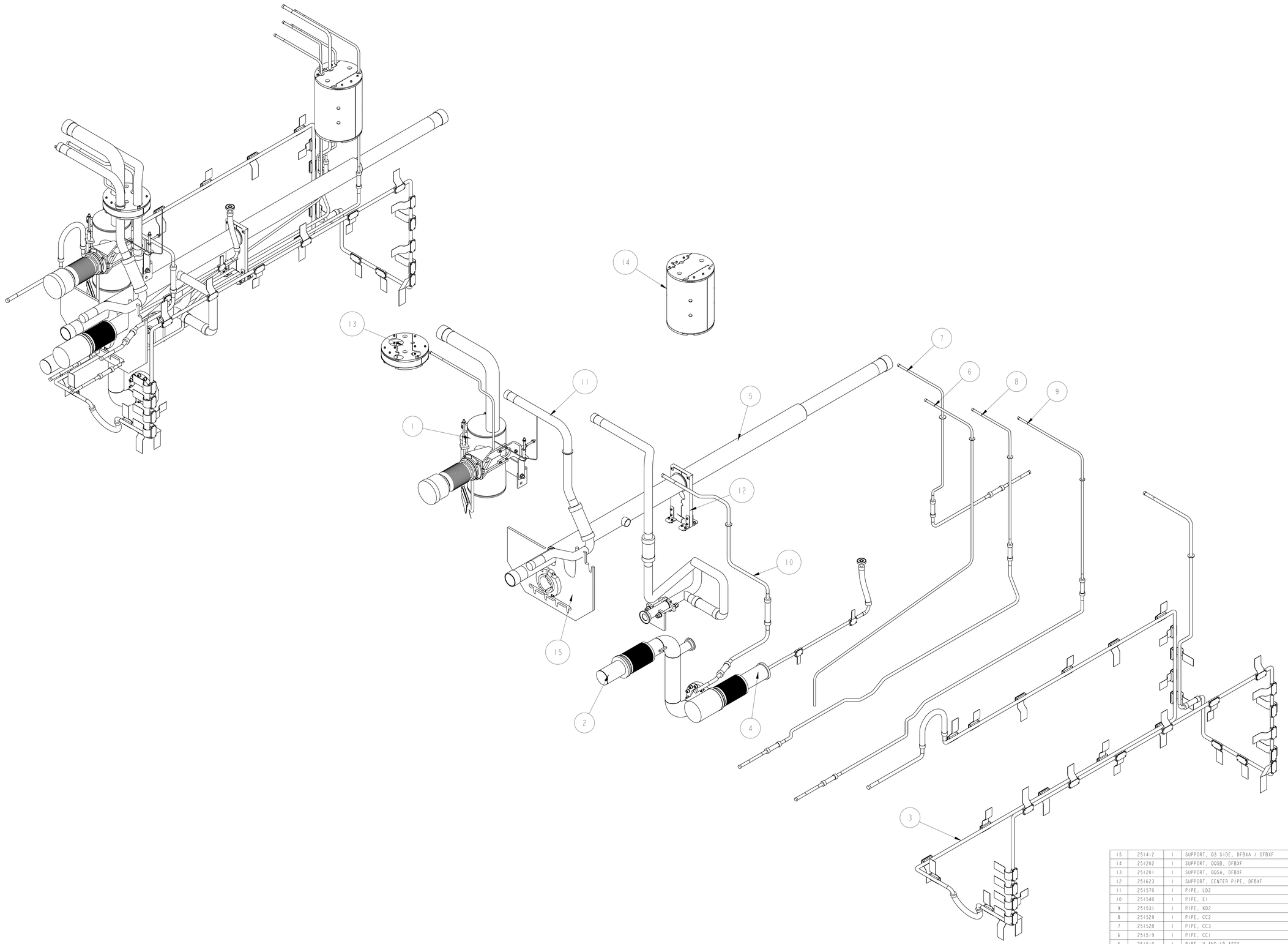

ITEM	PART NO	REQD	DESCRIPTION	MATERIAL
15	251412	1	SUPPORT, Q3 SIDE, DFBXA / DFBXF	NEMA G10
14	251202	1	SUPPORT, QQSB, DFBXF	NEMA G10
13	251201	1	SUPPORT, QQSA, DFBXF	NEMA G10
12	251623	1	SUPPORT, CENTER PIPE, DFBXF	-
11	251570	1	PIPE, LD2	-
10	251540	1	PIPE, E1	-
9	251531	1	PIPE, KD2	-
8	251529	1	PIPE, CC2	-
7	251528	1	PIPE, CC3	-
6	251519	1	PIPE, CC1	-
5	251510	1	PIPE, V AND LD ASSY	-
4	251301	1	PIPE, MQX2	-
3	251538	1	PIPE, EX	-
2	251554	1	PIPE WELDMENT, LD1 AND BUS DUCT	-
1	251545	1	PIPE, XB DFBXF	-

THIRD ANGLE PROJECTION

REV	DWG	CHK	ZONE	DATE	CHANGES
A	MJK	DPO		11/25/02	INITIAL RELEASE

UNLESS OTHERWISE SPECIFIED

TOLERANCES		
	X.X ± 0.1	FRAC. ± 1/64
	X.XX ± 0.03	Angles ± 1.00°
	X.XXX ± 0.010	FINISH 125/

DO NOT SCALE PRINT

THREADS ARE CLASS 2
CHAMFER ENDS OF ALL SCREW TREADS 30°
CUT ROUND, 1.5 THREAD RELIEF ON MACHINED THREADS
BREAK EDGES .016 MAX. ON MACHINED WORK
REMOVE BURRS, WELD SPLATTER & LOOSE SCALE
IN ACCORDANCE WITH ASME Y14.5M & B46.1

SHOP ORDERS

ACCT NO.	NO. REQD	SER NO.	-
DEL TO		DATE ISSD	-
		DATE REQD	-
SURFACE TREATMT	-		
IDENT METHOD	TAG		
PROJECT NUMBER	N/A		
PROJECT NAME	N/A		
DWN BY	KNOLLS	DATE	27-Nov-02
CHK BY	D.OSHATZ	DATE	11/25/02
APR BY	D.OSHATZ	DATE	11/25/02

ERNEST ORLANDO LAWRENCE BERKELEY NATIONAL LABORATORY
UNIVERSITY OF CALIFORNIA - BERKELEY

LHC IR FEEDBOX
CRYOGENICS
PIPING, DFBXF, IP5, RIGHT 24C395

MICROFILMED:	DWG. TYPE	SHOWN ON	SCALE: 0.125	DO NOT SCALE PRINTS
	ASSEM	.	SHEET 1 OF 11	
PATENT CLEAR:	DESIGN ACCT. NO.	CATEGORY CODE	DWG. NO.	SIZE / REV.
	Z5LCE2	LH2001	25i8746	A

DWG. NO. 25i8746 SIZE A REV. 1 SH. 1

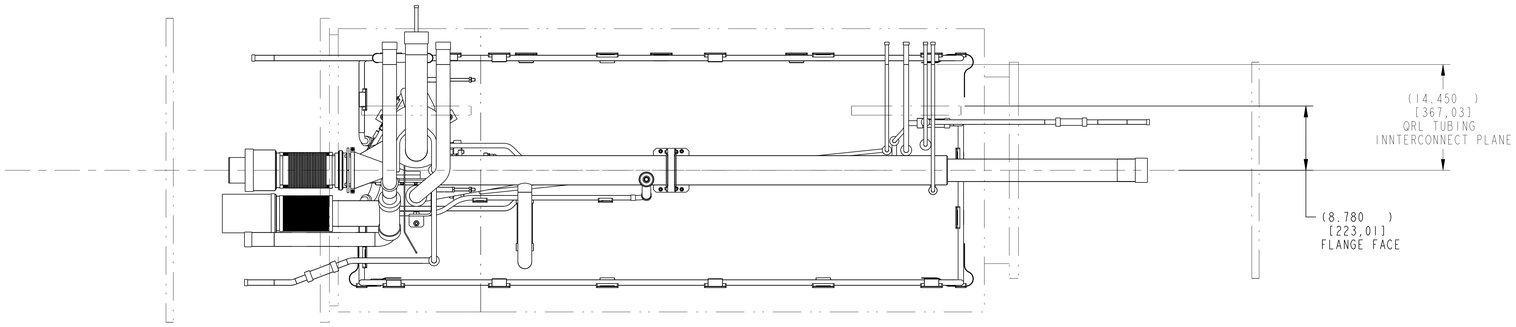

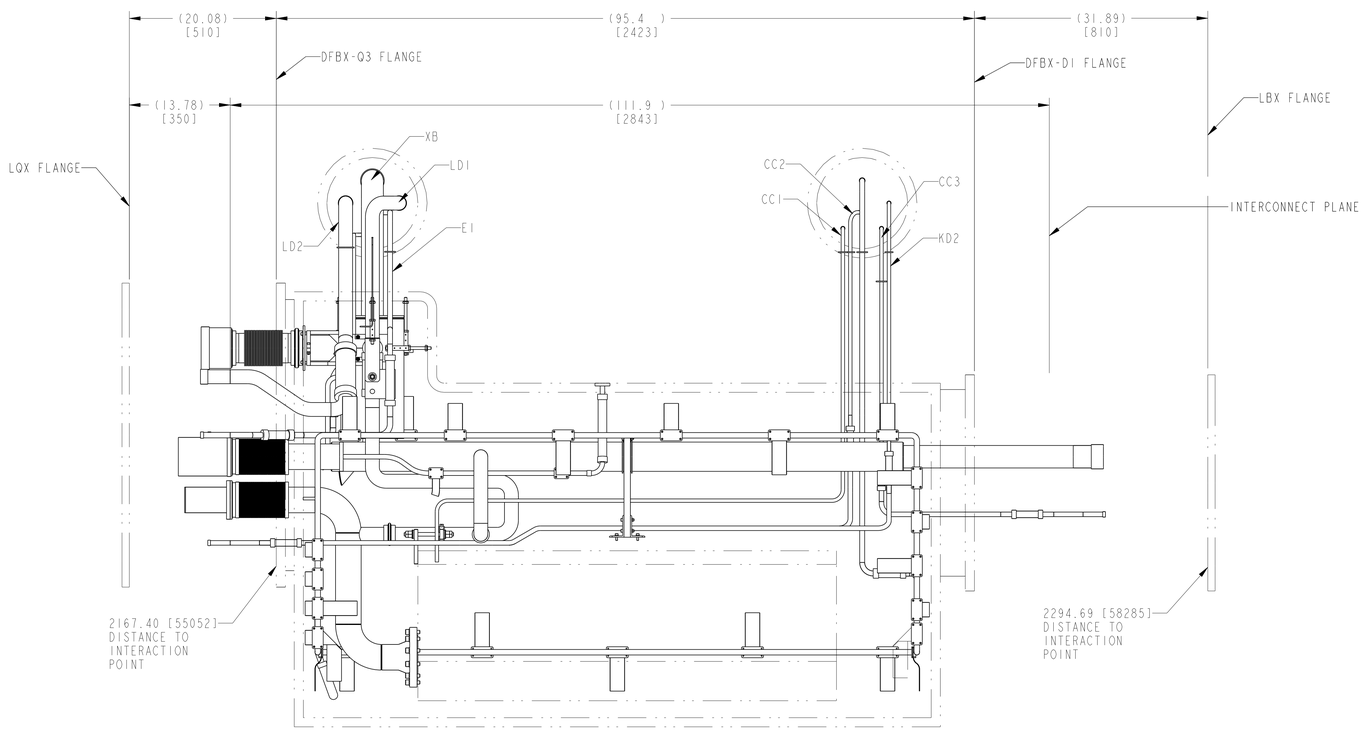

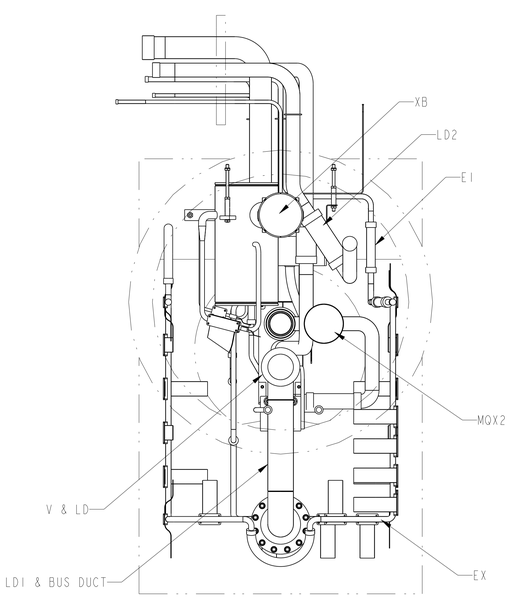

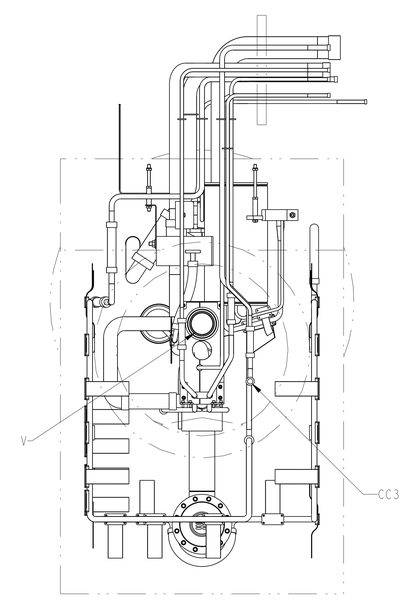

THIRD ANGLE PROJECTION

ERNEST ORLANDO LAWRENCE
BERKELEY NATIONAL LABORATORY
UNIVERSITY OF CALIFORNIA - BERKELEY

LHC IR FEEDBOX
CRYOGENICS
PIPING, DFBXF, IP5, RIGHT 24C395

MICROFILMED:	DWG. TYPE	SHOWN ON	SCALE: 0.125	DO NOT SCALE PRINTS
	ASSEM	.	SHEET 2 OF 11	
PATENT CLEAR:	DESIGN ACCT. NO.	CATEGORY CODE	DWG. NO.	TYPE	REV.
	Z5LCE2	LH2001	25i8746		A

DWG. NO. 25i8746 SHT. 2 REV. A

INSTRUMENTATION LINES

SHOWN FOR REFERENCE ONLY
NOTE: ALL WELDS MUST LEAVE TUBE
INTERIOR BURR FREE

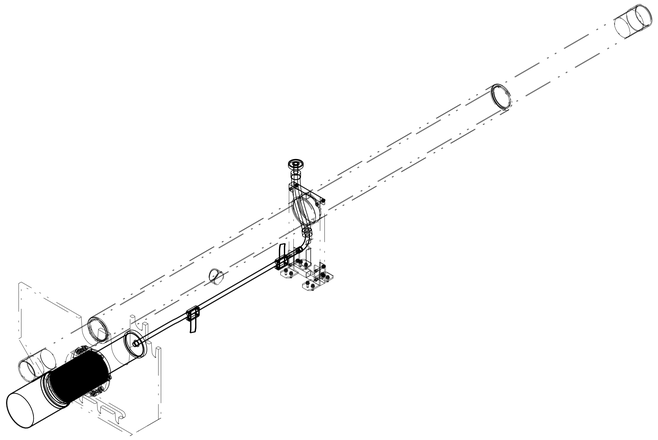

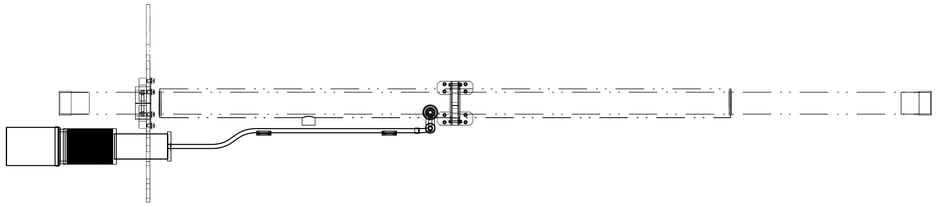

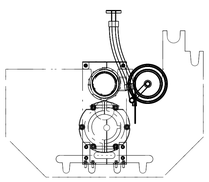

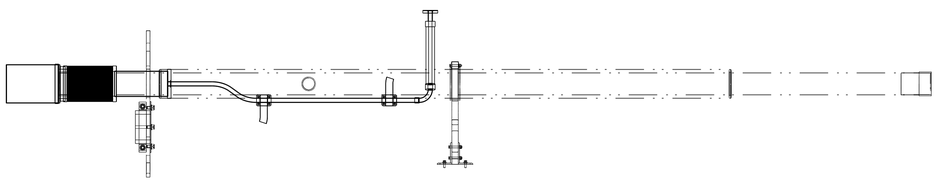

DWG. NO. 25i8746 SIZE A REV. 3

ERNEST ORLANDO LAWRENCE
BERKELEY NATIONAL LABORATORY
UNIVERSITY OF CALIFORNIA - BERKELEY

LHC IR FEEDBOX
CRYOGENICS
PIPING, DFBXF, IP5, RIGHT 24C395

MICROFILMED:	DWG. TYPE	SHOWN ON	SCALE: 0.125	DO NOT SCALE PRINTS
	ASSEM	-	SHEET 3 OF 11	
PATENT CLEAR:	DESIGN ACCT. NO.	CATEGORY CODE	DWG. NO.	SIZE / REV.
	Z5LCE2	LH2001	25i8746	A

LD LINES

SHOWN FOR REFERENCE ONLY

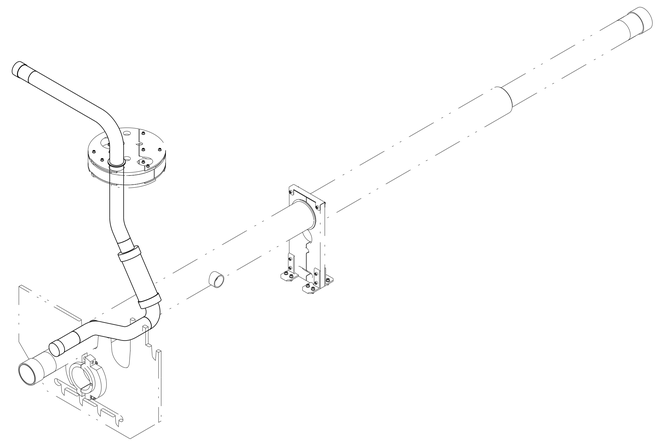

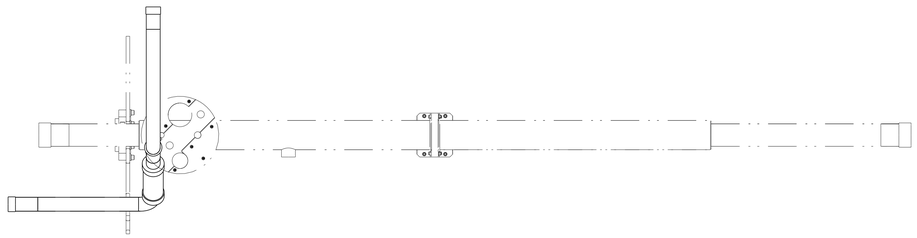

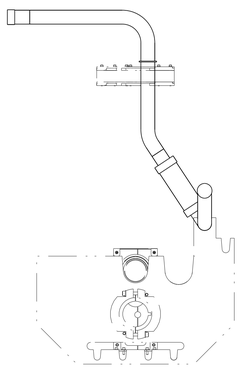

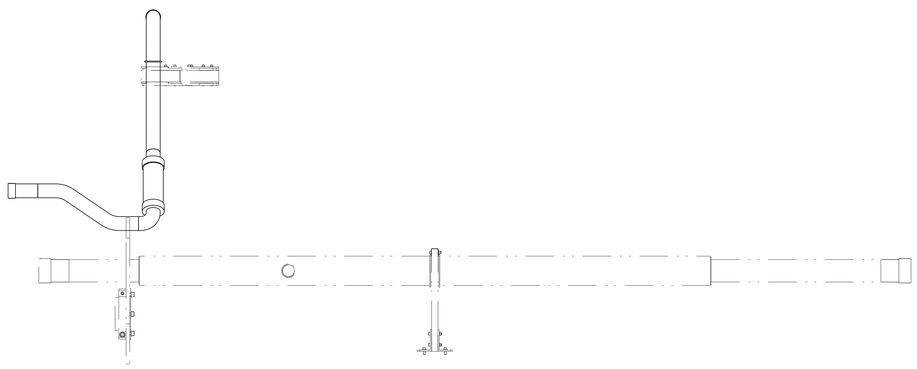

THIRD ANGLE PROJECTION

ERNEST ORLANDO LAWRENCE
BERKELEY NATIONAL LABORATORY
UNIVERSITY OF CALIFORNIA - BERKELEY

LHC IR FEEDBOX
CRYOGENICS
PIPING, DFBXF, IP5, RIGHT 24C395

MICROFILMED:	DWG. TYPE	SHOWN ON	SCALE: 0.125	DO NOT SCALE PRINTS
	ASSEM	-	SHEET 4 OF 11	
PATENT CLEAR:	DESIGN ACCT. NO.	CATEGORY CODE	DWG. NO.	SIZE / REV.
	Z5LCE2	LH2001	25i8746	A

DWG. NO. 25i8746 SIZE/REV. A 4

CC LINES

SHOWN FOR REFERENCE ONLY

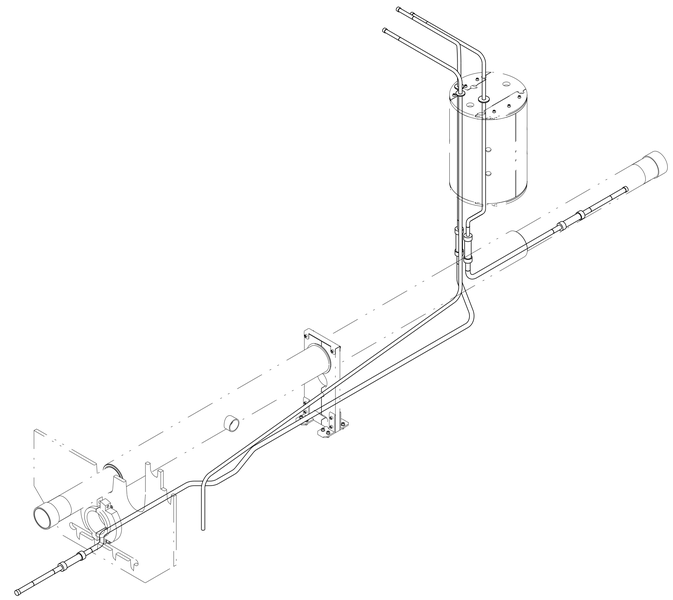

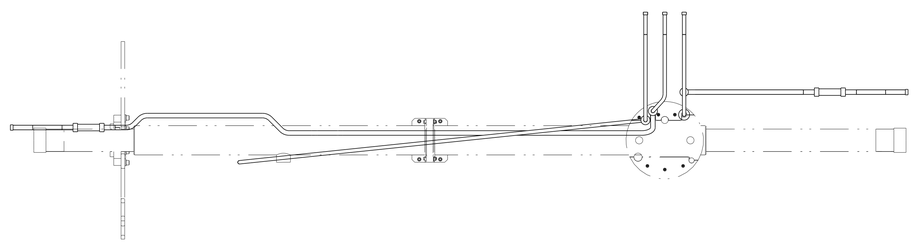

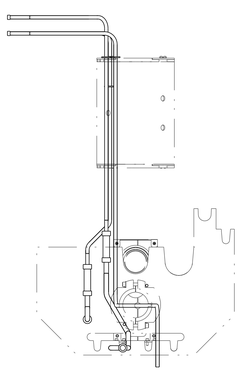

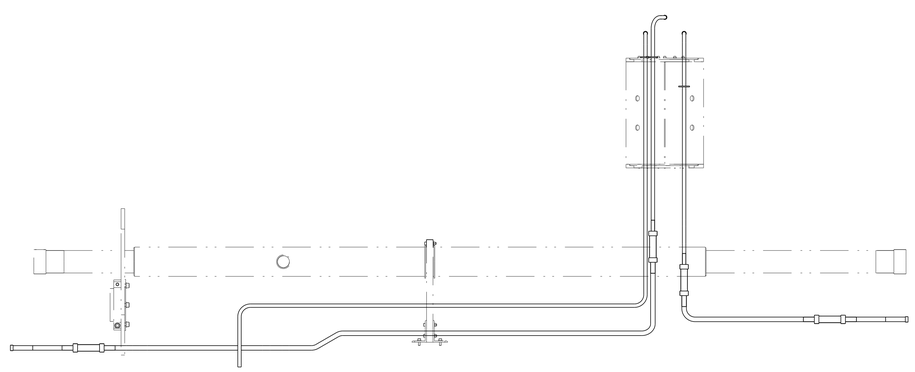

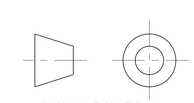

THIRD ANGLE PROJECTION

ERNEST ORLANDO LAWRENCE
BERKELEY NATIONAL LABORATORY
UNIVERSITY OF CALIFORNIA - BERKELEY

LHC IR FEEDBOX
CRYOGENICS
PIPING, DFBXF, IP5, RIGHT 24C395

MICROFILMED:	DWG. TYPE	SHOWN ON	SCALE: 0.125	DO NOT SCALE PRINTS
	ASSEM	.	SHEET 5 OF 11	
PATENT CLEAR:	DESIGN ACCT. NO.	CATEGORY CODE	DWG. NO.	SIZE / REV.
	Z5LCE2	LH2001	25i8746	A

DWG. NO. 25i8746 SIZE A REV. 5

KD2 LINE

SHOWN FOR REFERENCE ONLY

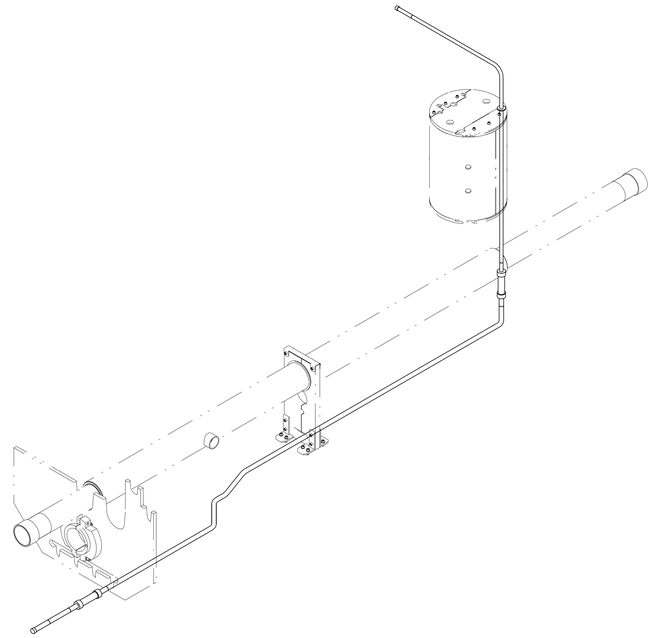

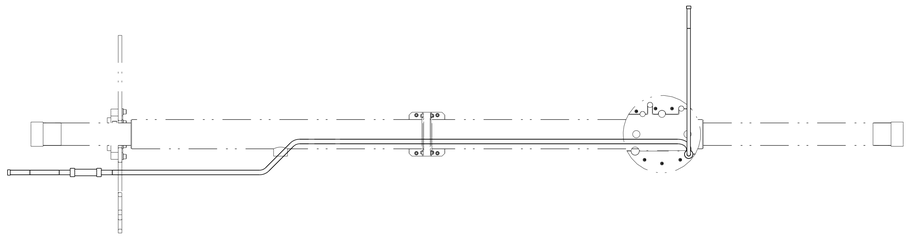

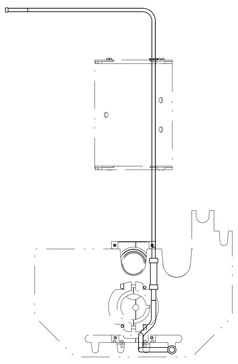

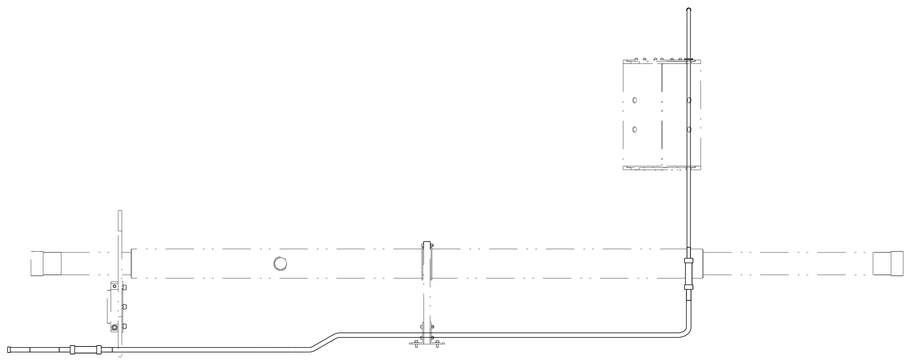

THIRD ANGLE PROJECTION

ERNEST ORLANDO LAWRENCE
BERKELEY NATIONAL LABORATORY
UNIVERSITY OF CALIFORNIA - BERKELEY

LHC IR FEEDBOX
CRYOGENICS
PIPING, DFBXF, IP5, RIGHT 24C395

MICROFILMED:	DWG. TYPE	SHOWN ON	SCALE: 0.125	DO NOT SCALE PRINTS
	ASSEM	.	SHEET 6 OF 11	
PATENT CLEAR:	DESIGN ACCT. NO.	CATEGORY CODE	DWG. NO.	SIZE / REV.
	Z5LCE2	LH2001	25i8746	A

DWG. NO. 25i8746 SHEET 6 REV. A

E1 LINE

SHOWN FOR REFERENCE ONLY

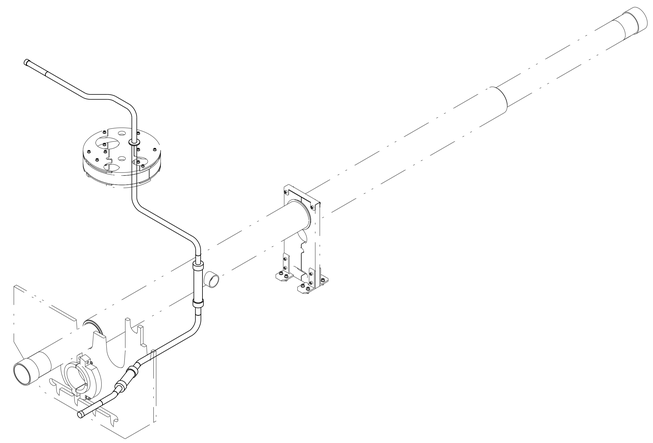

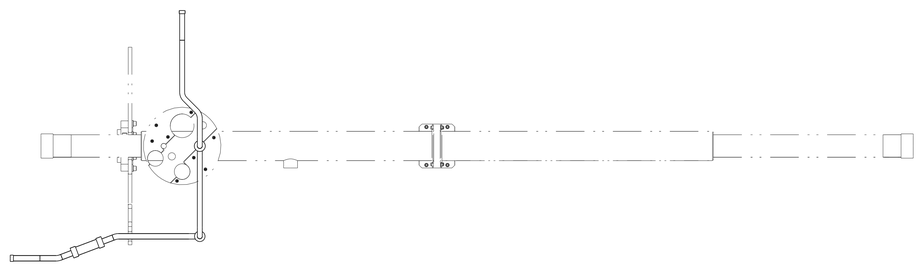

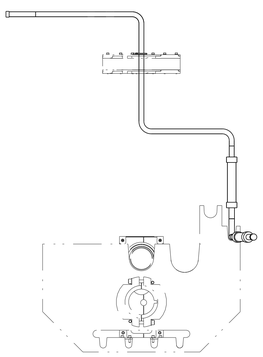

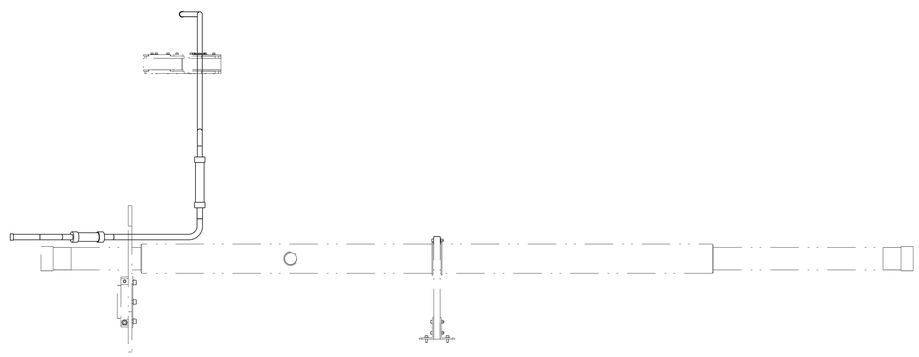

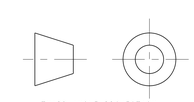

THIRD ANGLE PROJECTION

ERNEST ORLANDO LAWRENCE
BERKELEY NATIONAL LABORATORY
UNIVERSITY OF CALIFORNIA - BERKELEY

LHC IR FEEDBOX
CRYOGENICS
PIPING, DFBXF, IP5, RIGHT 24C395

MICROFILMED:	DWG. TYPE	SHOWN ON	SCALE: 0.125	DO NOT SCALE PRINTS
	ASSEM	.	SHEET 7 OF 11	
PATENT CLEAR:	DESIGN ACCT. NO.	CATEGORY CODE	DWG. NO.	SIZE / REV.
	Z5LCE2	LH2001	25i8746	A

DWG. NO. 25i8746 SIZE A REV. 7

EX LINE

SHOWN FOR REFERENCE ONLY

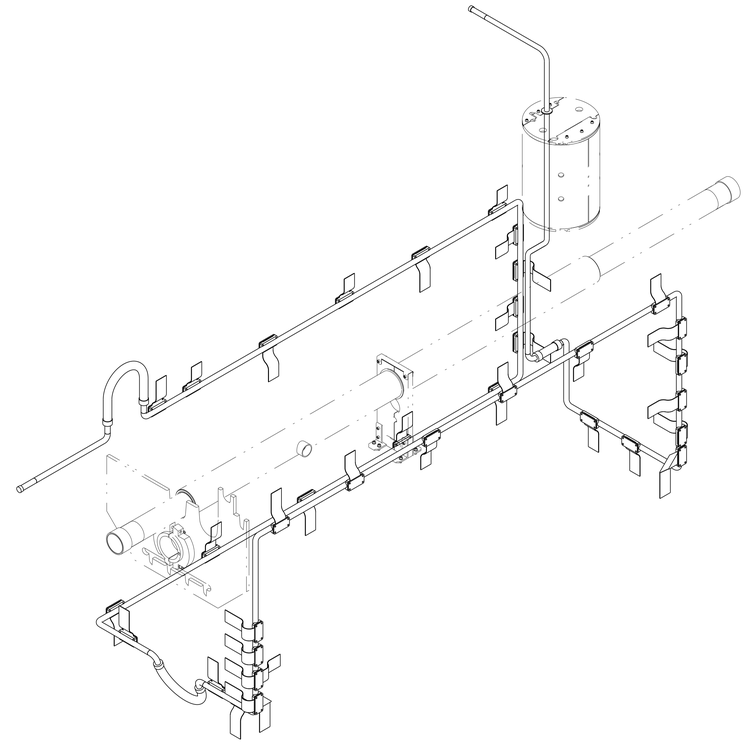

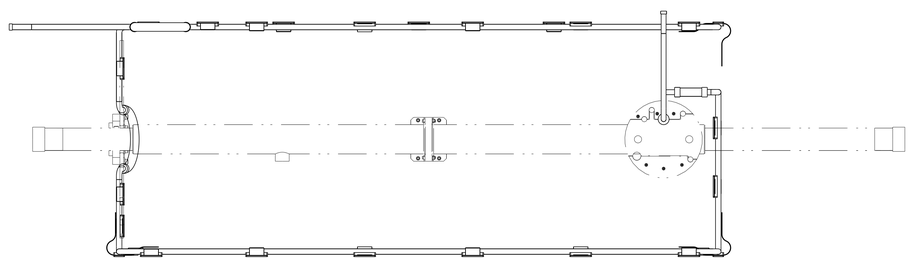

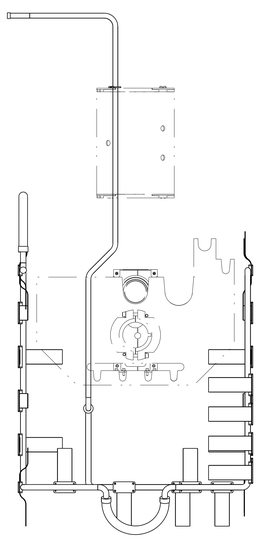

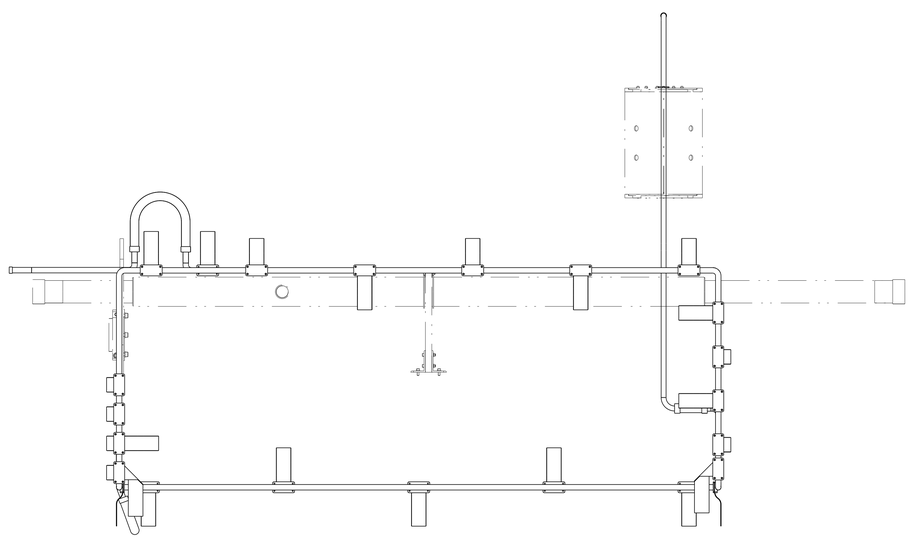

THIRD ANGLE PROJECTION

ERNEST ORLANDO LAWRENCE
BERKELEY NATIONAL LABORATORY
UNIVERSITY OF CALIFORNIA - BERKELEY

LHC IR FEEDBOX
CRYOGENICS
PIPING, DFBXF, IP5, RIGHT 24C395

MICROFILMED:	DWG. TYPE	SHOWN ON	SCALE: 0.125	DO NOT SCALE PRINTS
	ASSEM	.	SHEET 8 OF 11	
PATENT CLEAR:	DESIGN ACCT. NO.	CATEGORY CODE	DWG. NO.	SIZE / REV.
	Z5LCE2	LH2001	2518746	A

DWG. NO. 2518746 A 8

XB & CY LINES

SHOWN FOR REFERENCE ONLY

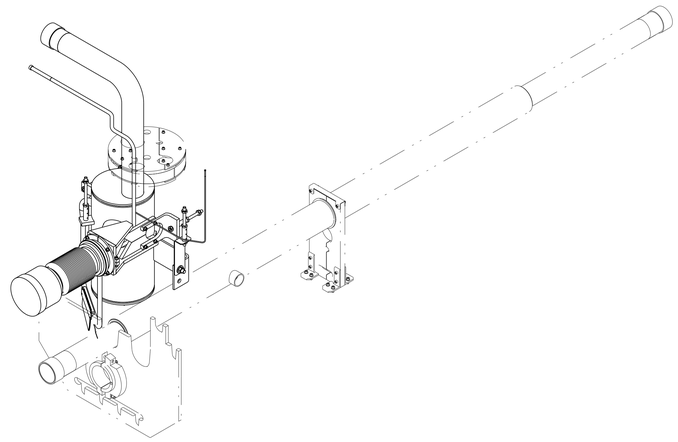

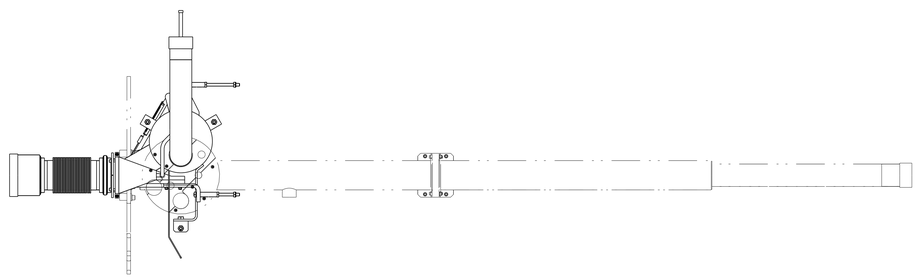

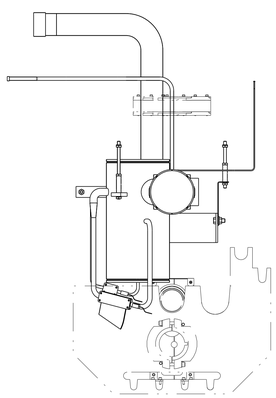

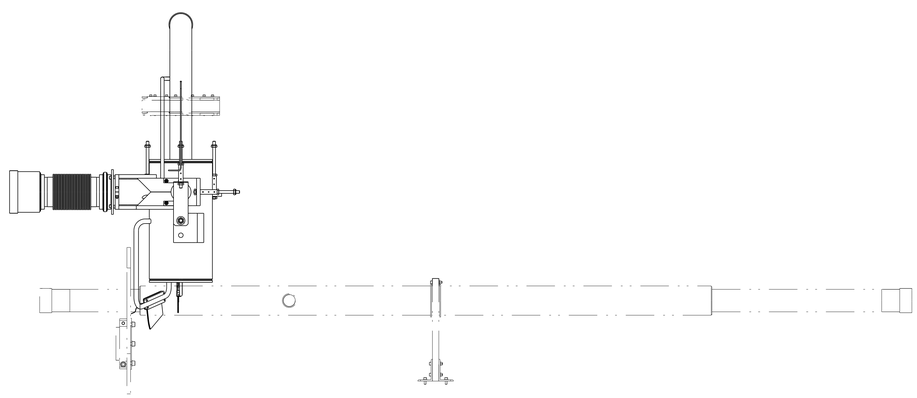

THIRD ANGLE PROJECTION

ERNEST ORLANDO LAWRENCE
BERKELEY NATIONAL LABORATORY
UNIVERSITY OF CALIFORNIA - BERKELEY

LHC IR FEEDBOX
CRYOGENICS
PIPING, DFBXF, IP5, RIGHT 24C395

MICROFILMED:	DWG. TYPE	SHOWN ON	SCALE: 0.125	DO NOT SCALE PRINTS
	ASSEM	-	SHEET 9 OF 11	
PATENT CLEAR:	DESIGN ACCT. NO.	CATEGORY CODE	DWG. NO.	SIZE / REV.
	Z5LCE2	LH2001	25i8746	A

DWG. NO. 25i8746 SIZE / REV. A SH. 9

BEAM TUBE

SHOWN FOR REFERENCE ONLY

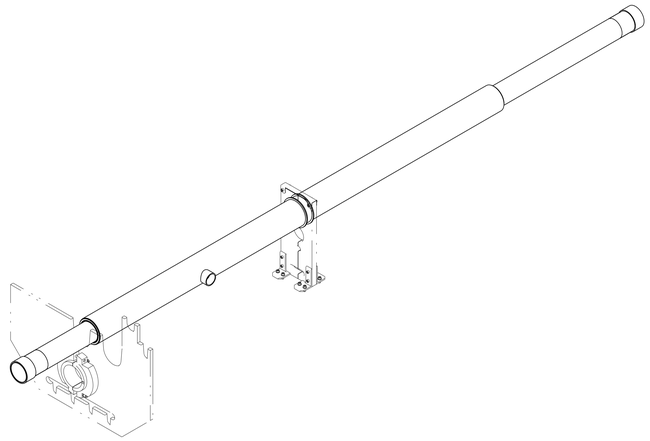

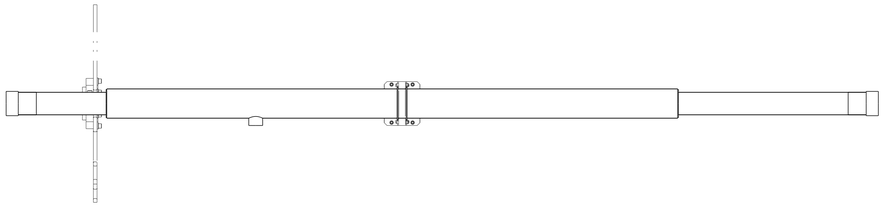

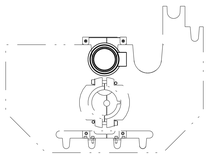

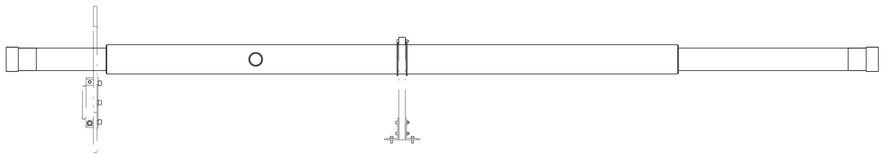

THIRD ANGLE PROJECTION

ERNEST ORLANDO LAWRENCE
BERKELEY NATIONAL LABORATORY
UNIVERSITY OF CALIFORNIA - BERKELEY

LHC IR FEEDBOX
CRYOGENICS
PIPING, DFBXF, IP5, RIGHT 24C395

MICROFILMED:	DWG. TYPE	SHOWN ON	SCALE: 0.125	DO NOT SCALE PRINTS
	ASSEM		SHEET 10 OF 11	
PATENT CLEAR:	DESIGN ACCT. NO.	CATEGORY CODE	DWG. NO.	SIZE / REV.
	Z5LCE2	LH2001	25i8746	A

DWG. NO. 25i8746 SHEET REV. 10 A

BUS DUCT ASSEMBLY

SHOWN FOR REFERENCE ONLY

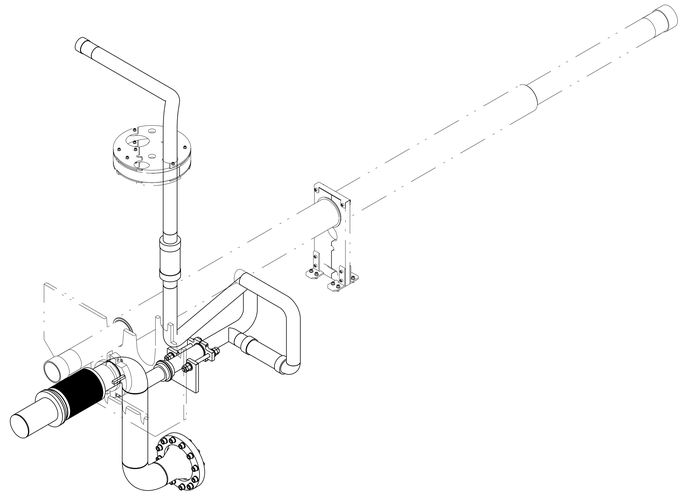

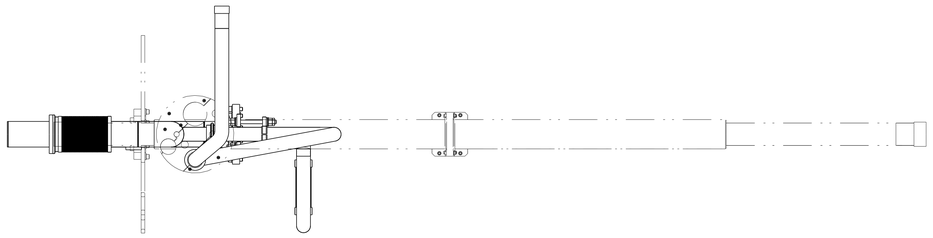

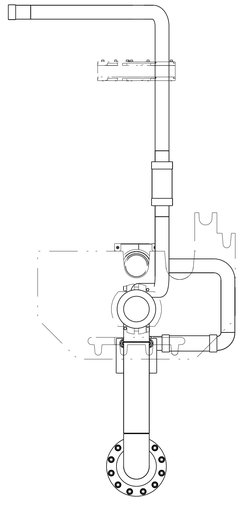

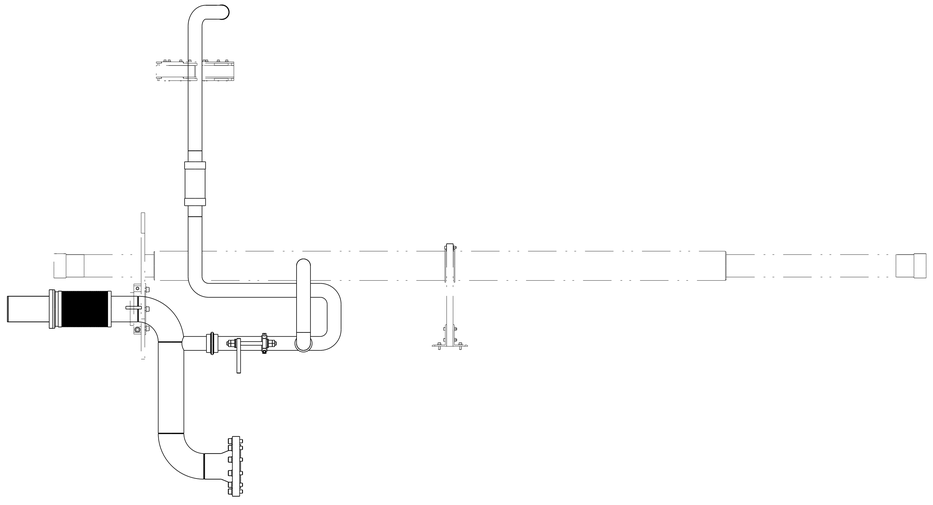

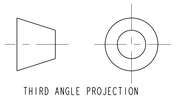

THIRD ANGLE PROJECTION

ERNEST ORLANDO LAWRENCE
BERKELEY NATIONAL LABORATORY
UNIVERSITY OF CALIFORNIA - BERKELEY

LHC IR FEEDBOX
CRYOGENICS
PIPING, DFBXF, IP5, RIGHT 24C395

MICROFILMED:	DWG. TYPE	SHOWN ON	SCALE: 0.125	DO NOT SCALE PRINTS
	ASSEM	.	SHEET 11 OF 11	
PATENT CLEAR:	DESIGN ACCT. NO.	CATEGORY CODE	DWG. NO.	SIZE / REV.
	Z5LCE2	LH2001	25i8746	A

DWG. NO. 25i8746 SIZE A REV. 11