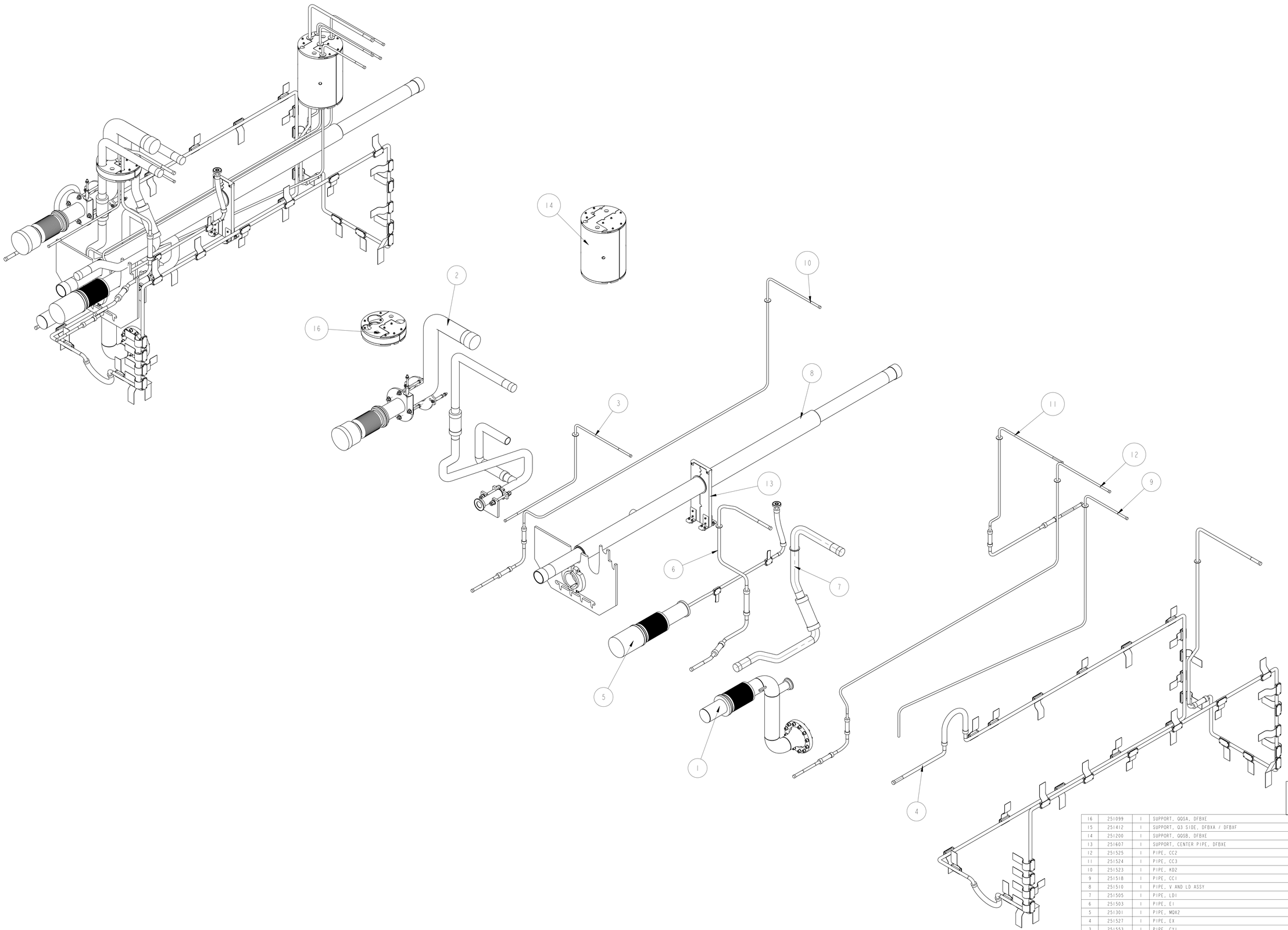

ITEM	PART NO	REQD	DESCRIPTION	MATERIAL
16	251099	1	SUPPORT, QQSA, DFBXE	NEMA G10
15	251412	1	SUPPORT, Q3 SIDE, DFBXA / DFBXF	NEMA G10
14	251200	1	SUPPORT, QQSB, DFBXE	NEMA G10
13	251607	1	SUPPORT, CENTER PIPE, DFBXE	-
12	251525	1	PIPE, CC2	-
11	251524	1	PIPE, CC3	-
10	251523	1	PIPE, KD2	-
9	251518	1	PIPE, CC1	-
8	251510	1	PIPE, V AND LD ASSY	-
7	251505	1	PIPE, LD1	-
6	251503	1	PIPE, E1	-
5	251301	1	PIPE, MQX2	-
4	251527	1	PIPE, EX	-
3	251553	1	PIPE, CY1	-
2	251552	1	PIPE WELDMENT, XB	-
1	251557	1	PIPE WELDMENT, LD2 AND BUS DUCT	-

THIRD ANGLE PROJECTION

REV	DWG	CHK	ZONE	DATE	CHANGES
A	MJK	DPO		11/25/02	INITIAL RELEASE

UNLESS OTHERWISE SPECIFIED

TOLERANCES		
	X.X ± 0.1	FRAC. ± 1/64
	X.XX ± 0.03	Angles ± 1.00°
	X.XXX ± 0.010	FINISH 125/

DO NOT SCALE PRINT

THREADS ARE CLASS 2
CHAMFER ENDS OF ALL SCREW TREADS 30°
CUT ROUND, 1.5 THREAD RELIEF ON MACHINED THREADS
BREAK EDGES .016 MAX. ON MACHINED WORK
REMOVE BURRS, WELD SPLATTER & LOOSE SCALE
IN ACCORDANCE WITH ASME Y14.5M & B46.1

SHOP ORDERS

ACCT NO.	NO. REQD	SER NO.	-
		DATE ISSD	-
DEL TO		DATE REQD	-
SURFACE TREATMT	-		
IDENT METHOD	TAG		
PROJECT NUMBER	N/A		
PROJECT NAME	N/A		
DWG BY	KNOLLS	DATE	05-Apr-02
CHK BY	D.OSHATZ	DATE	11/25/02
APR BY	D.OSHATZ	DATE	11/25/02

ERNEST ORLANDO LAWRENCE BERKELEY NATIONAL LABORATORY
UNIVERSITY OF CALIFORNIA - BERKELEY

LHC IR FEEDBOX
CRYOGENICS
PIPING DFBXE IP5, LEFT 24C394

MICROFILMED:	DWG. TYPE	SHOWN ON	SCALE: 0.125	DO NOT SCALE PRINTS
	ASSEM	.	SHEET 1 OF 11	
PATENT CLEAR:	DESIGN ACCT. NO.	CATEGORY CODE	DWG. NO.	SIZE / REV.
	Z5LCE2	LH2001	2518736	A

DWG. NO. 2518736 SIZE A REV. 1 SH. 1

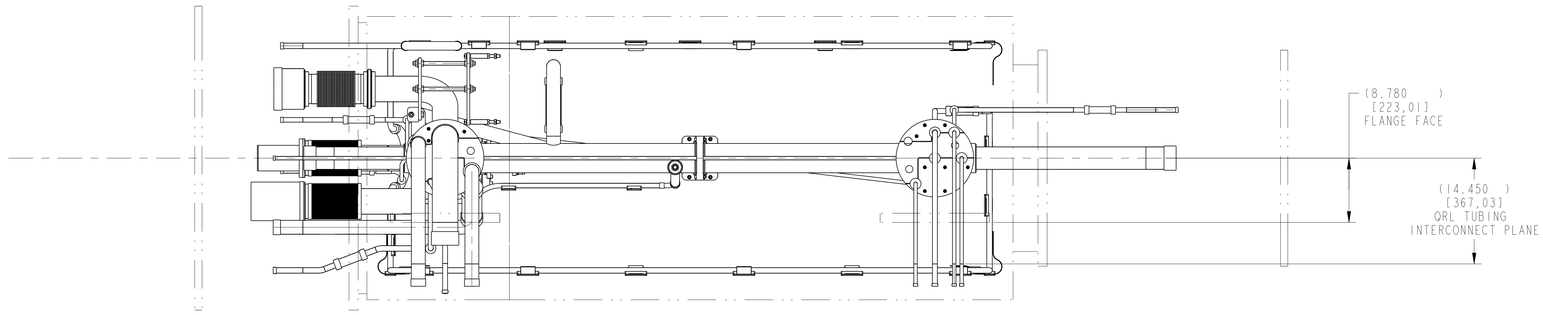

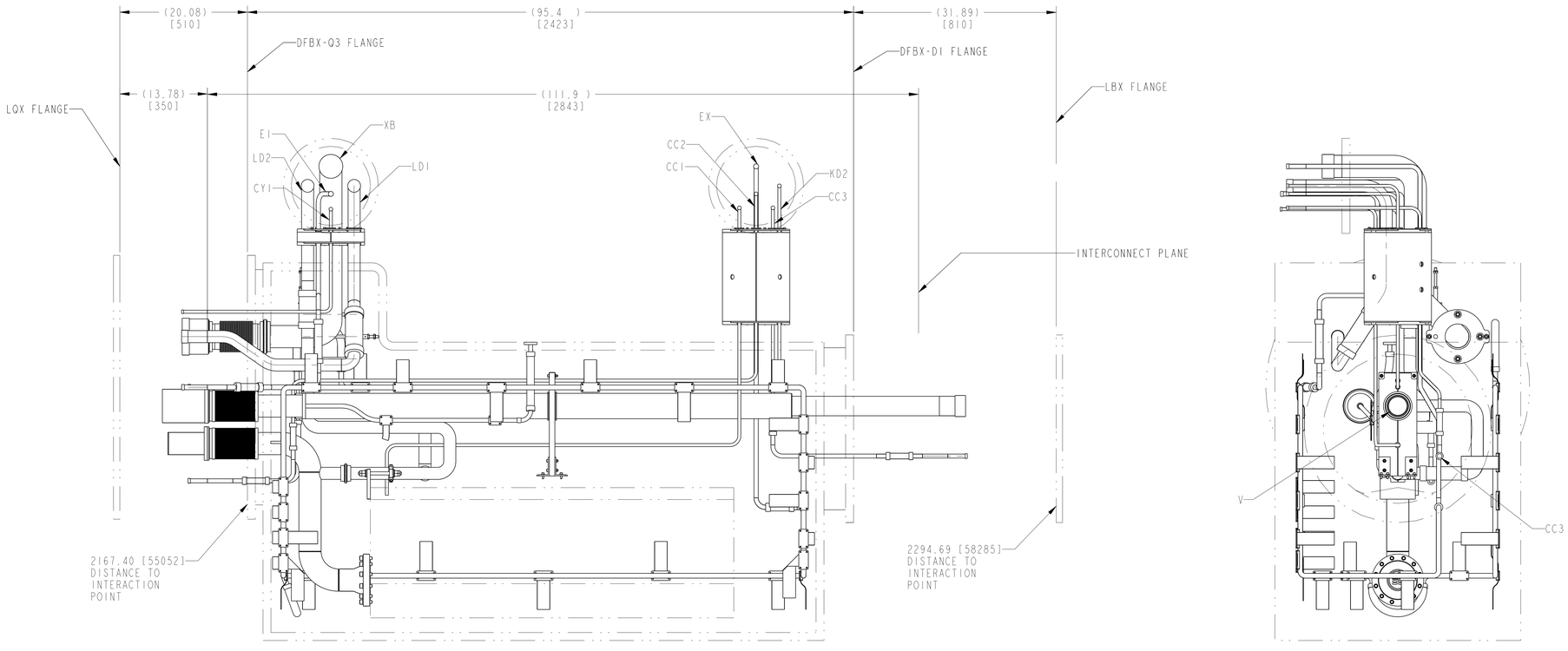

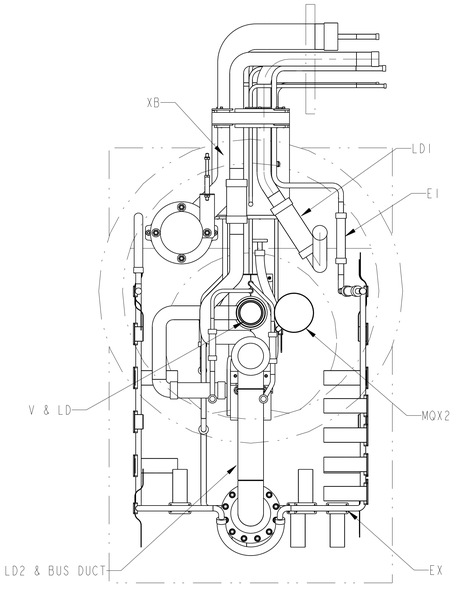

THIRD ANGLE PROJECTION

ERNEST ORLANDO LAWRENCE
BERKELEY NATIONAL LABORATORY
UNIVERSITY OF CALIFORNIA - BERKELEY

LHC IR FEEDBOX
CRYOGENICS
PIPING DFBXE IP5, LEFT 24C394

MICROFILMED:	DWG. TYPE	SHOWN ON	SCALE: 0.125	DO NOT SCALE PRINTS
	ASSEM	-	SHEET 2 OF 11	
PATENT CLEAR:	DESIGN ACCT. NO.	CATEGORY CODE	DWG. NO.	SIZE / REV.
	Z5LCE2	LH2001	2518736	A

DWG. NO. 2518736 SHEET REV. 2 A

INSTRUMENTATION LINES

SHOWN FOR REFERENCE ONLY
NOTE: ALL WELDS MUST LEAVE TUBE
INTERIOR BURR FREE

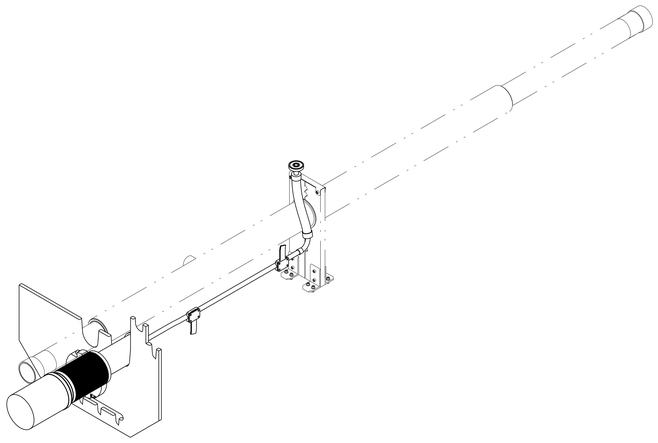

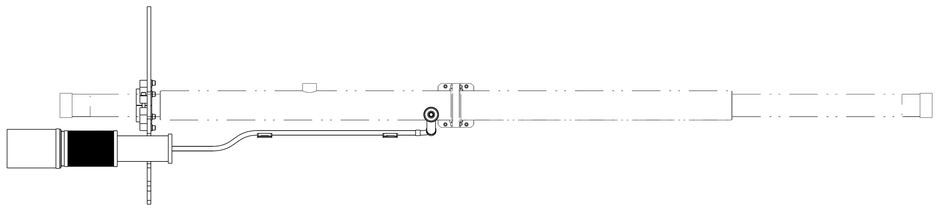

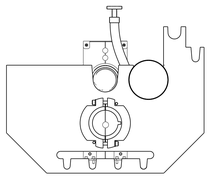

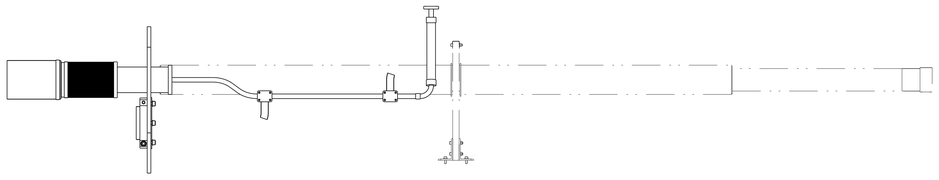

THIRD ANGLE PROJECTION

ERNEST ORLANDO LAWRENCE
BERKELEY NATIONAL LABORATORY
UNIVERSITY OF CALIFORNIA - BERKELEY

LHC IR FEEDBOX
CRYOGENICS
PIPING DFBXE IP5, LEFT 24C394

MICROFILMED:	DWG. TYPE: ASSEM	SHOWN ON: -	SCALE: 0.125 DO NOT SCALE PRINTS
			SHEET 3 OF 11
PATENT CLEAR:	DESIGN ACCT. NO.: Z5LCE2	CATEGORY CODE: LH2001	DWG. NO.: 2518736 SIZE: A REV.: A

DWG. NO. 2518736 SIZE A REV. A SH. 3

LD LINES

SHOWN FOR REFERENCE ONLY

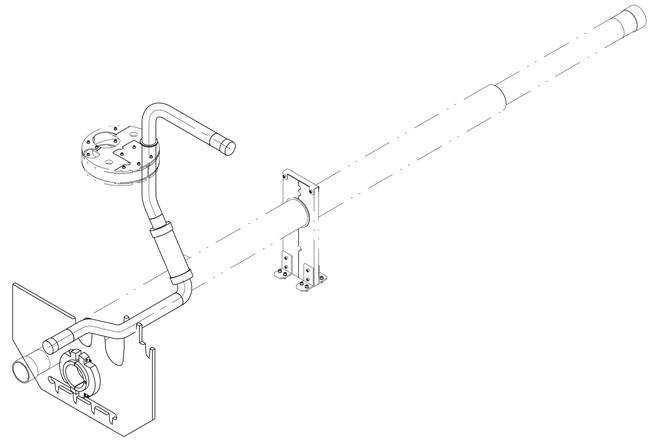

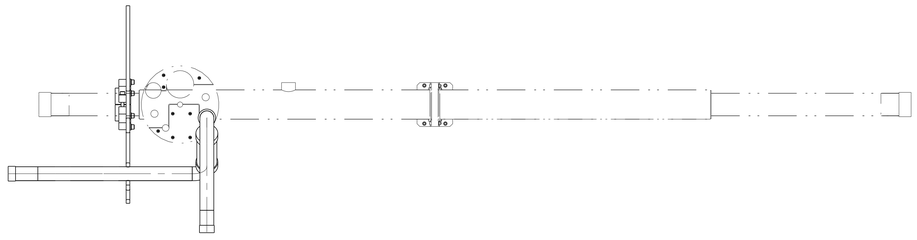

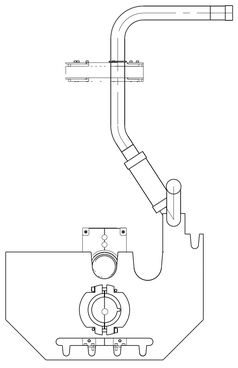

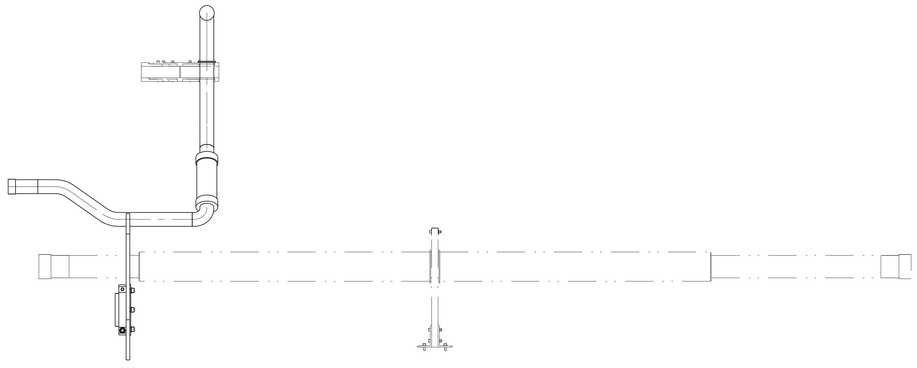

THIRD ANGLE PROJECTION

ERNEST ORLANDO LAWRENCE
BERKELEY NATIONAL LABORATORY
UNIVERSITY OF CALIFORNIA - BERKELEY

LHC IR FEEDBOX
CRYOGENICS
PIPING DFBXE IP5, LEFT 24C394

MICROFILMED:	DWG. TYPE: ASSEM	SHOWN ON: -	SCALE: 0.125 DO NOT SCALE PRINTS
			SHEET 4 OF 11
PATENT CLEAR:	DESIGN ACCT. NO.: Z5LCE2	CATEGORY CODE: LH2001	DWG. NO.: 2518736 SIZE: A REV.: A

DWG. NO. 2518736 SIZE A REV. 4

CC LINES

SHOWN FOR REFERENCE ONLY

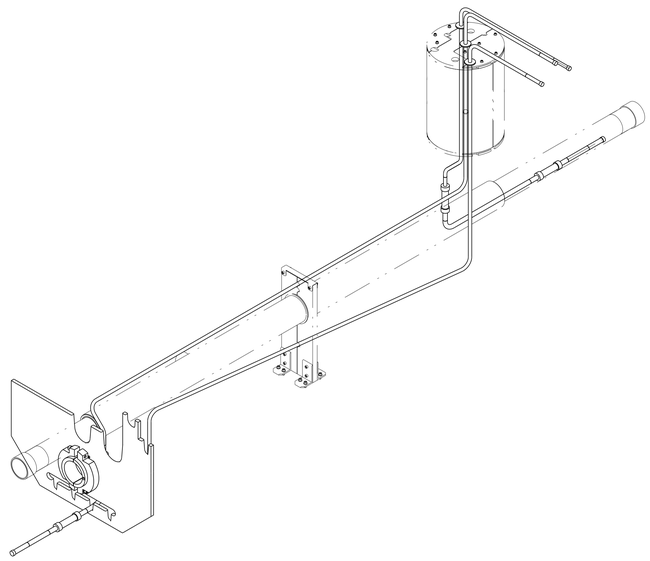

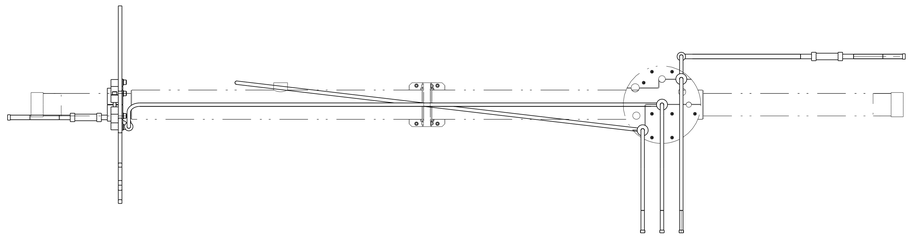

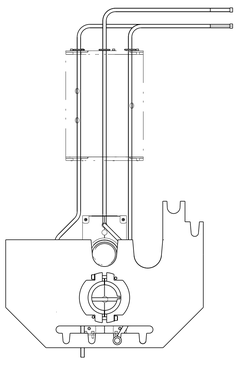

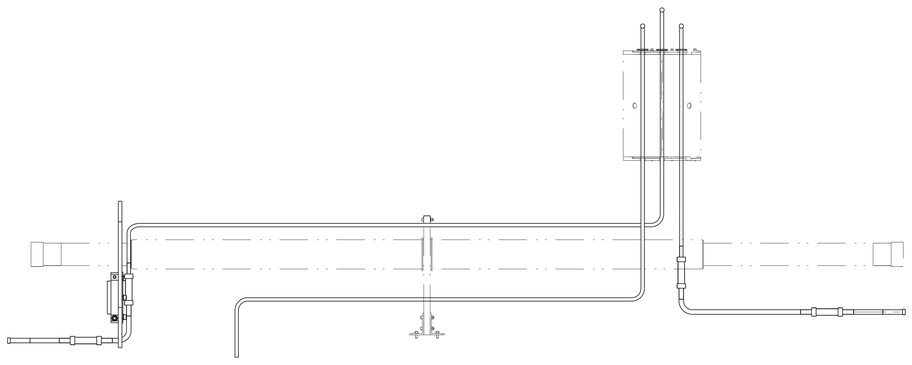

THIRD ANGLE PROJECTION

ERNEST ORLANDO LAWRENCE
BERKELEY NATIONAL LABORATORY
UNIVERSITY OF CALIFORNIA - BERKELEY

LHC IR FEEDBOX
CRYOGENICS
PIPING DFBXE_IP5, LEFT 24C394

MICROFILMED:	DWG. TYPE: ASSEM	SHOWN ON: -	SCALE: 0.125 DO NOT SCALE PRINTS
			SHEET 5 OF 11
PATENT CLEAR:	DESIGN ACCT. NO.: Z5LCE2	CATEGORY CODE: LH2001	DWG. NO.: 2518736 SIZE: A REV.

DWG. NO. 2518736 SIZE A REV. 5

KD2 LINE

SHOWN FOR REFERENCE ONLY

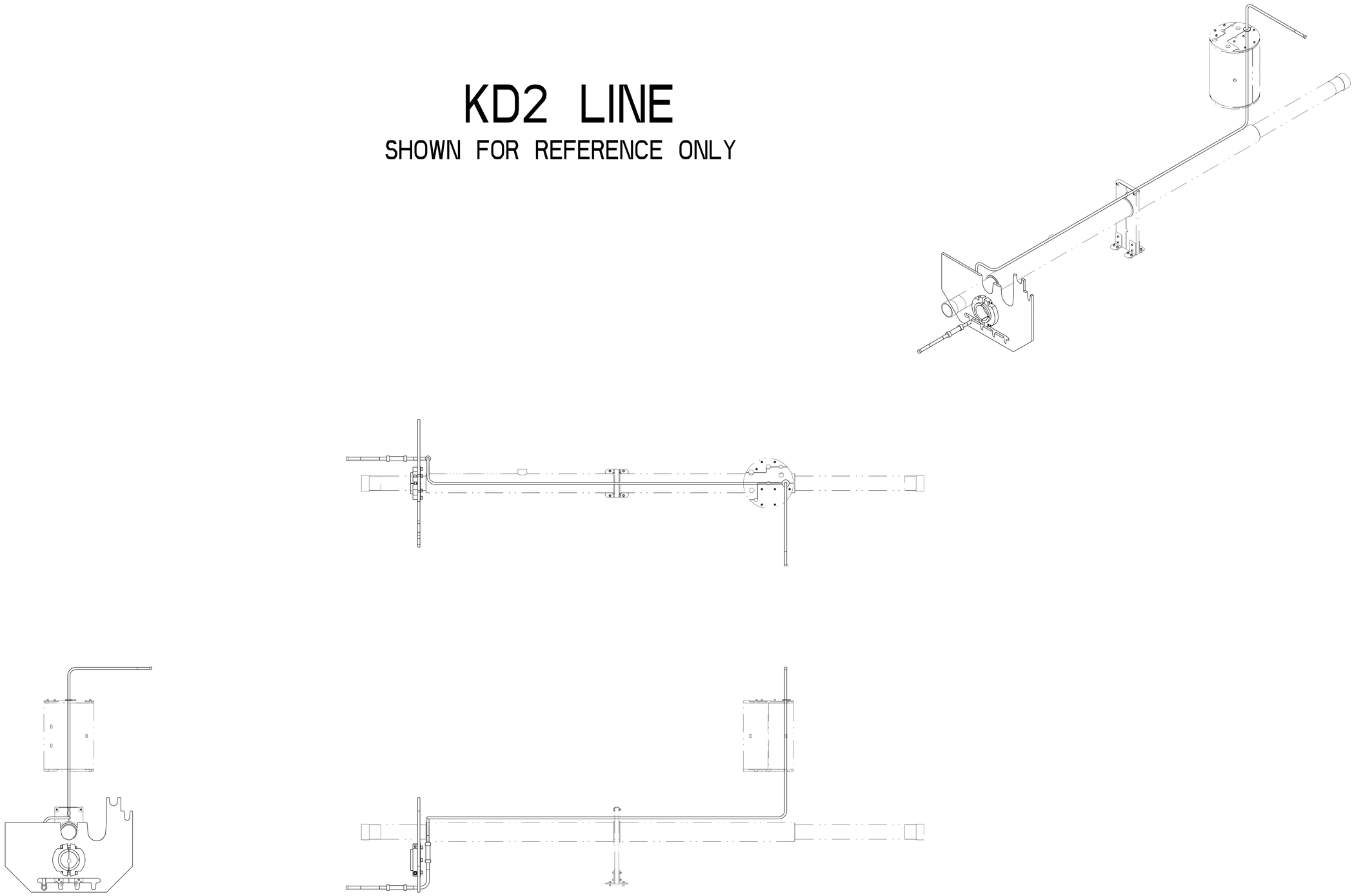

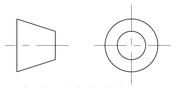

THIRD ANGLE PROJECTION

ERNEST ORLANDO LAWRENCE
BERKELEY NATIONAL LABORATORY
UNIVERSITY OF CALIFORNIA - BERKELEY

LHC IR FEEDBOX
CRYOGENICS
PIPING DFBXE IP5, LEFT 24C394

MICROFILMED:	DWG. TYPE	SHOWN ON	SCALE: 0.125	DO NOT SCALE PRINTS
	ASSEM	.	SHEET 6 OF 11	
PATENT CLEAR:	DESIGN ACCT. NO.	CATEGORY CODE	DWG. NO.	SIZE / REV.
	Z5LCE2	LH2001	2518736	A

DWG. NO. 2518736 SIZE A REV. 6

E1 LINE

SHOWN FOR REFERENCE ONLY

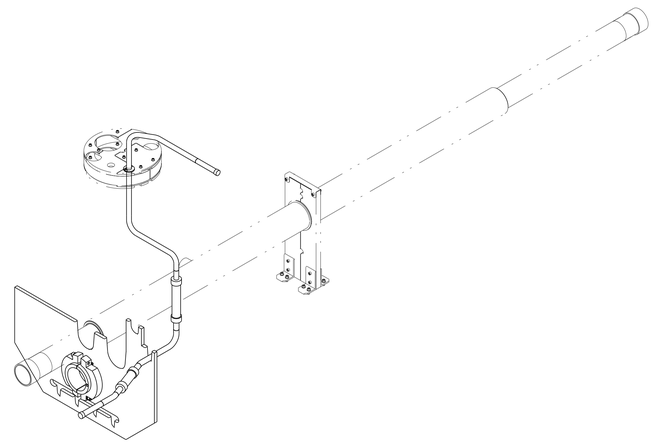

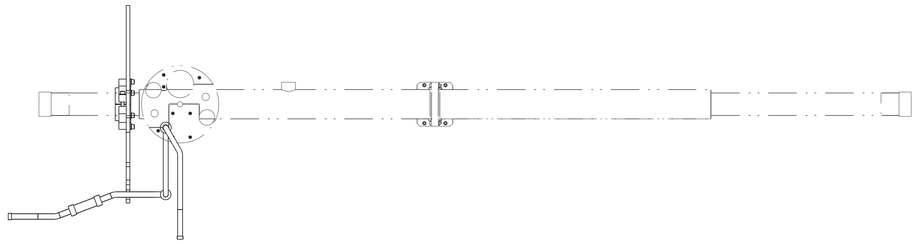

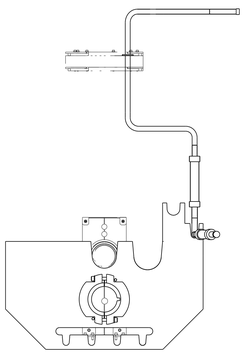

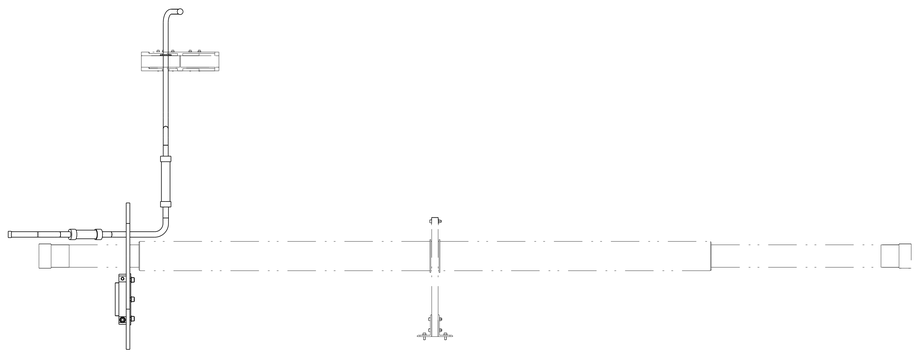

THIRD ANGLE PROJECTION

ERNEST ORLANDO LAWRENCE
BERKELEY NATIONAL LABORATORY
UNIVERSITY OF CALIFORNIA - BERKELEY

LHC IR FEEDBOX
CRYOGENICS
PIPING DFBXE IP5, LEFT 24C394

MICROFILMED:	DWG. TYPE: ASSEM	SHOWN ON: -	SCALE: 0.125 DO NOT SCALE PRINTS
			SHEET 7 OF 11
PATENT CLEAR:	DESIGN ACCT. NO.: Z5LCE2	CATEGORY CODE: LH2001	DWG. NO.: 2518736 SIZE: A REV.

DWG. NO. 2518736 SIZE A REV. 7

EX LINE

SHOWN FOR REFERENCE ONLY

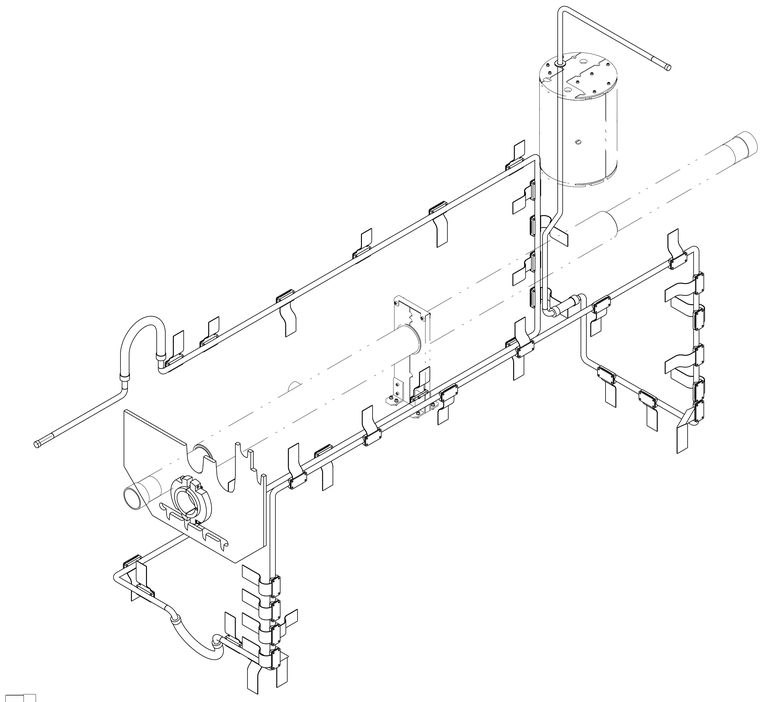

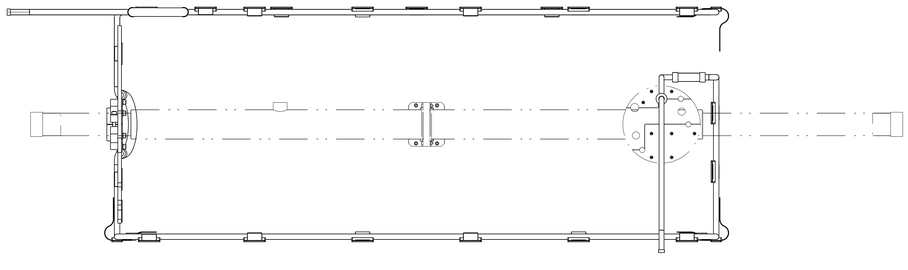

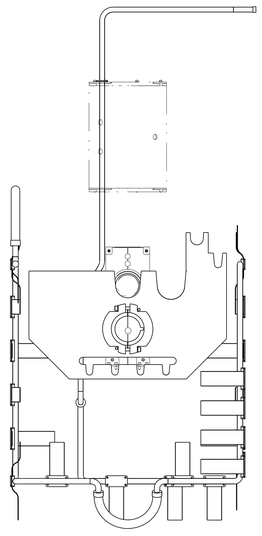

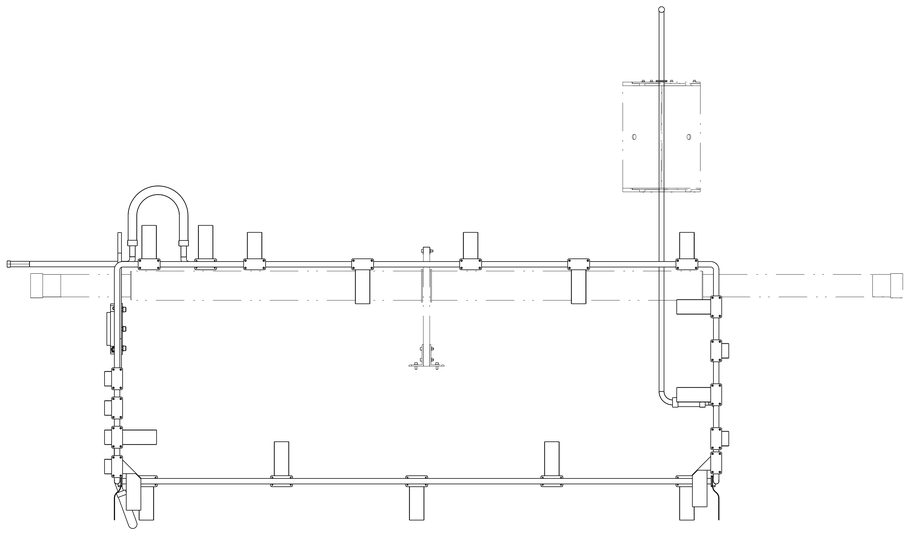

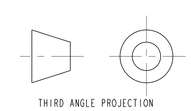

THIRD ANGLE PROJECTION

ERNEST ORLANDO LAWRENCE
BERKELEY NATIONAL LABORATORY
UNIVERSITY OF CALIFORNIA - BERKELEY

LHC IR FEEDBOX
CRYOGENICS
PIPING DFBXE IP5, LEFT 24C394

MICROFILMED:	DWG. TYPE	SHOWN ON	SCALE: 0.125	DO NOT SCALE PRINTS
	ASSEM	.	SHEET 8 OF 11	
PATENT CLEAR:	DESIGN ACCT. NO.	CATEGORY CODE	DWG. NO.	SIZE / REV.
	Z5LCE2	LH2001	2518736	A

DWG. NO. 2518736 SIZE A REV. 8

XB & CY LINES

SHOWN FOR REFERENCE ONLY

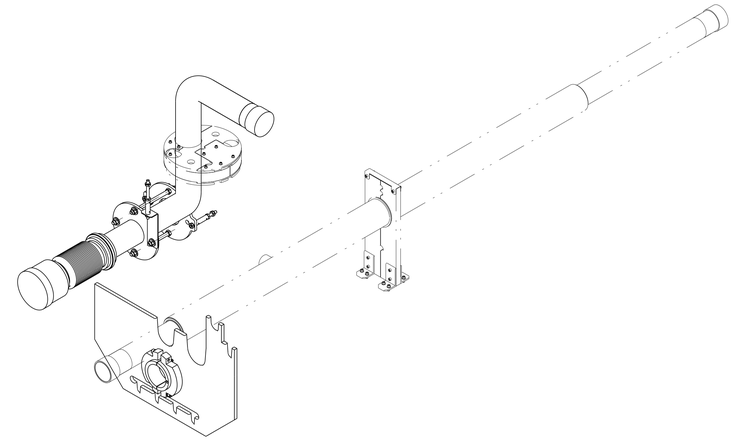

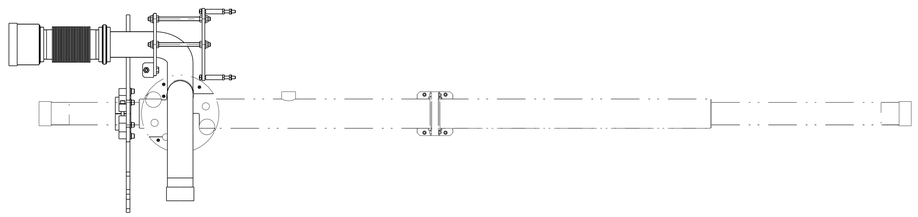

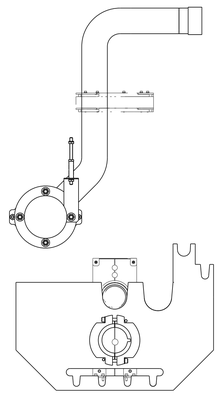

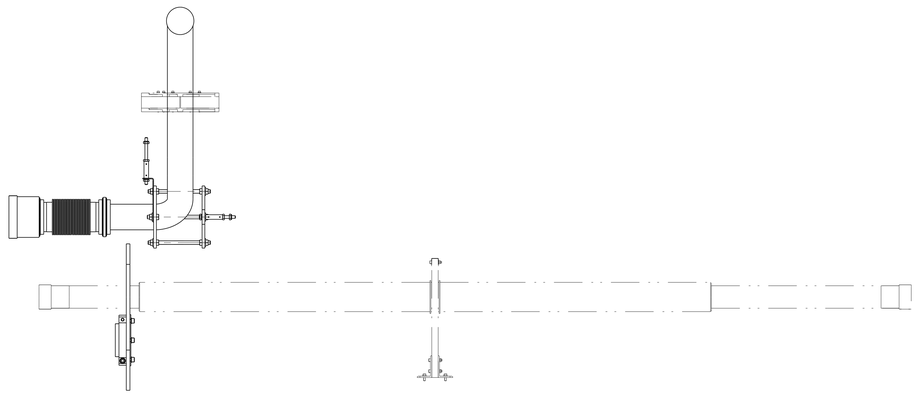

THIRD ANGLE PROJECTION

ERNEST ORLANDO LAWRENCE
BERKELEY NATIONAL LABORATORY
UNIVERSITY OF CALIFORNIA - BERKELEY

LHC IR FEEDBOX
CRYOGENICS
PIPING DFBXE IP5, LEFT 24C394

MICROFILMED:	DWG. TYPE: ASSEM	SHOWN ON: -	SCALE: 0.125	DO NOT SCALE PRINTS
			SHEET 9 OF 11	
PATENT CLEAR:	DESIGN ACCT. NO.: Z5LCE2	CATEGORY CODE: LH2001	DWG. NO.: 2518736	SIZE: A / REV.: A

DWG. NO. 2518736 | SHEET 9 | REV. A

BEAM TUBE

SHOWN FOR REFERENCE ONLY

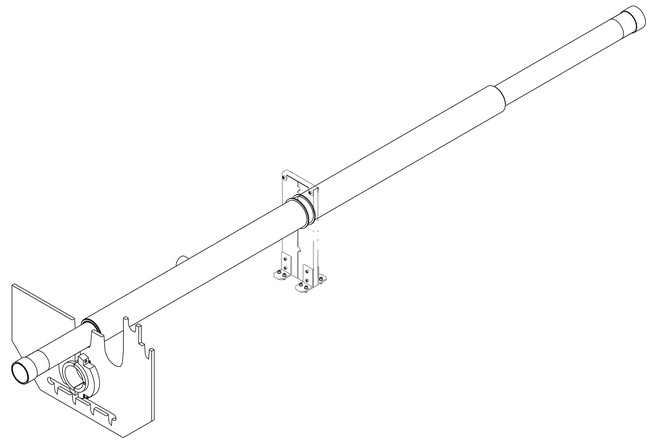

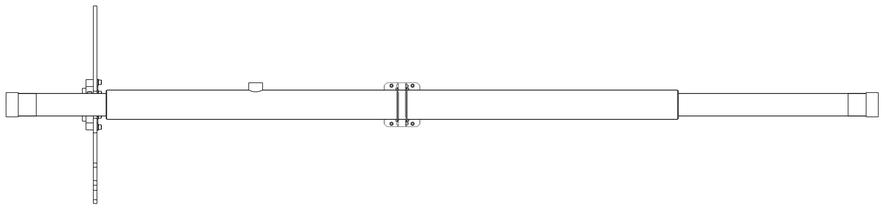

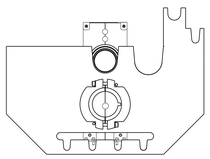

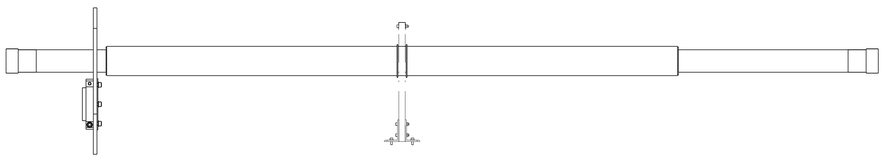

THIRD ANGLE PROJECTION

ERNEST ORLANDO LAWRENCE
BERKELEY NATIONAL LABORATORY
UNIVERSITY OF CALIFORNIA - BERKELEY

LHC IR FEEDBOX
CRYOGENICS
PIPING DFBXE IP5, LEFT 24C394

MICROFILMED:	DWG. TYPE: ASSEM	SHOWN ON: .	SCALE: 0.125	DO NOT SCALE PRINTS
			SHEET 10 OF 11	
PATENT CLEAR:	DESIGN ACCT. NO.: Z5LCE2	CATEGORY CODE: LH2001	DWG. NO.: 2518736	SIZE: A / REV.:

DWG. NO. 2518736 SIZE A REV. 10

BUS DUCT ASSEMBLY

SHOWN FOR REFERENCE ONLY

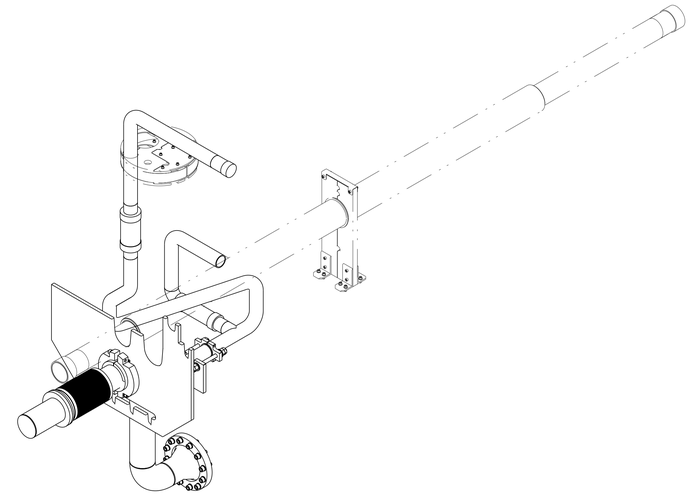

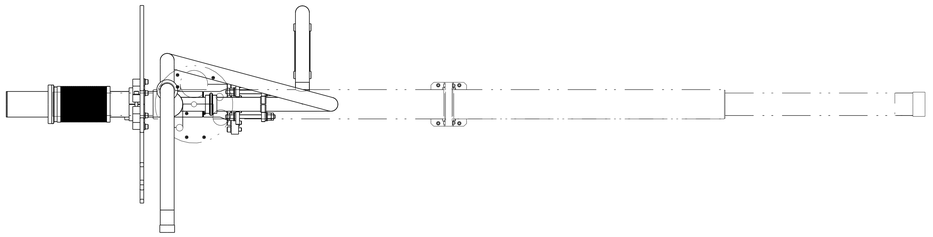

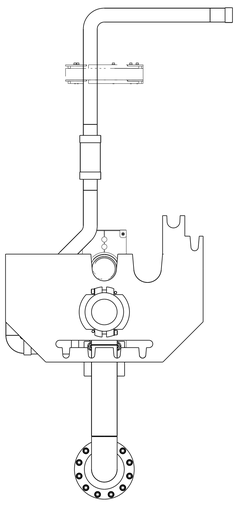

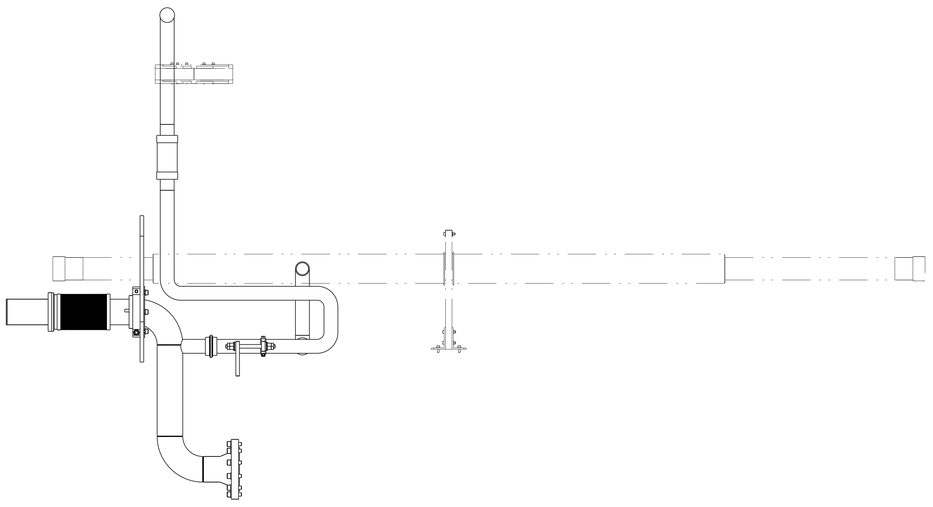

THIRD ANGLE PROJECTION

ERNEST ORLANDO LAWRENCE
BERKELEY NATIONAL LABORATORY
UNIVERSITY OF CALIFORNIA - BERKELEY

LHC IR FEEDBOX
CRYOGENICS
PIPING DFBXE IP5, LEFT 24C394

MICROFILMED:	DWG. TYPE: ASSEM	SHOWN ON	SCALE: 0.125	DO NOT SCALE PRINTS
			SHEET 11 OF 11	
PATENT CLEAR:	DESIGN ACCT. NO. Z5LCE2	CATEGORY CODE LH2001	DWG. NO. 2518736	SIZE A / REV.

DWG. NO. 2518736 SHEET REV. 11 A