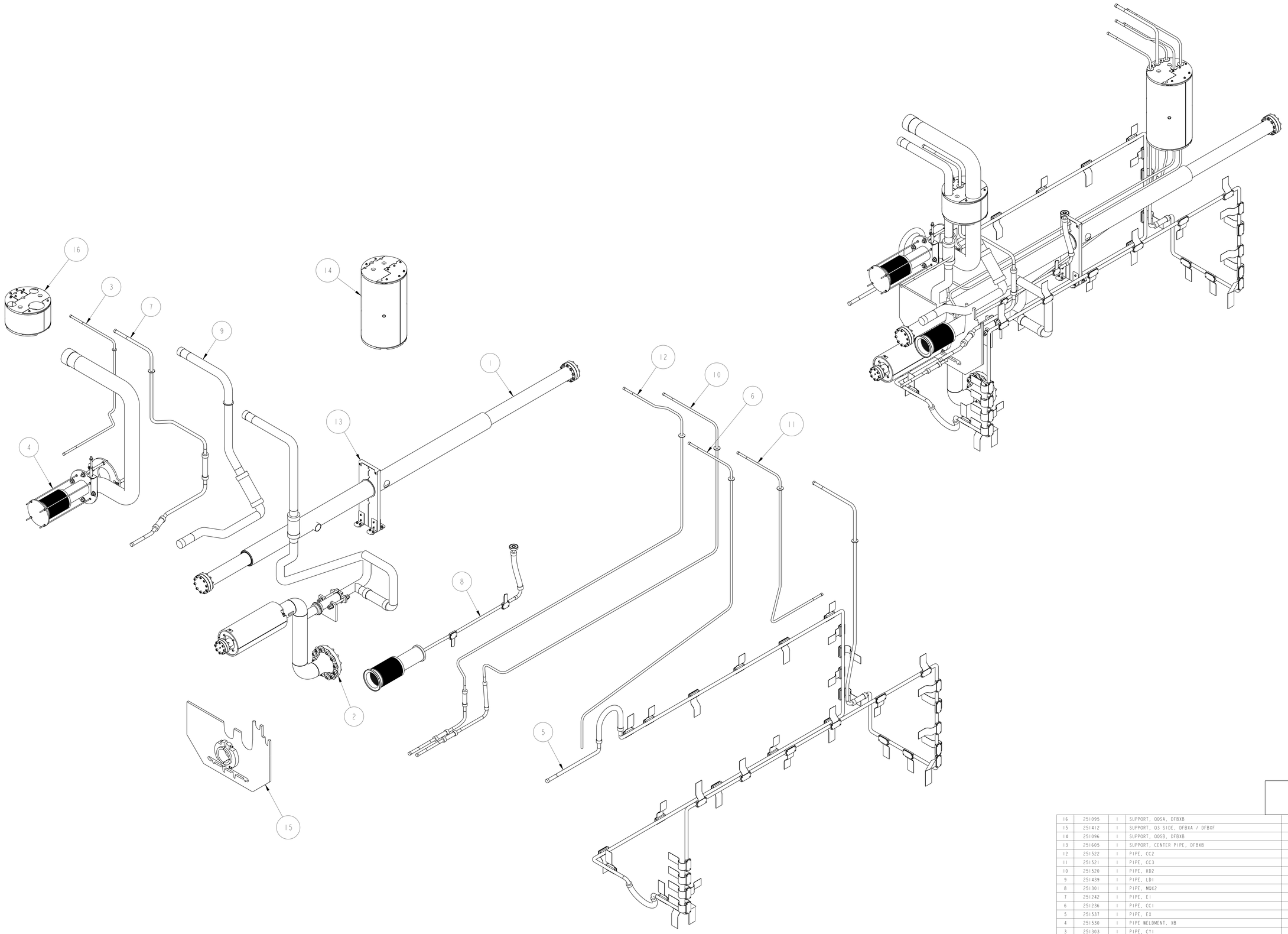


| ITEM | PART NO | REQD | DESCRIPTION | MATERIAL |
|---|---|---|---|---|
| 16 | 251095 | 1 | SUPPORT, QQSA, DFBXB | NEMA G10 |
| 15 | 251412 | 1 | SUPPORT, Q3 SIDE, DFBXA / DFBXF | NEMA G10 |
| 14 | 251096 | 1 | SUPPORT, QQSB, DFBXB | NEMA G10 |
| 13 | 251605 | 1 | SUPPORT, CENTER PIPE, DFBXB | - |
| 12 | 251522 | 1 | PIPE, CC2 | - |
| 11 | 251521 | 1 | PIPE, CC3 | - |
| 10 | 251520 | 1 | PIPE, KD2 | - |
| 9 | 251439 | 1 | PIPE, LD1 | - |
| 8 | 251301 | 1 | PIPE, MQX2 | - |
| 7 | 251242 | 1 | PIPE, E1 | - |
| 6 | 251236 | 1 | PIPE, CC1 | - |
| 5 | 251537 | 1 | PIPE, EX | - |
| 4 | 251530 | 1 | PIPE WELDMENT, XB | - |
| 3 | 251303 | 1 | PIPE, CY1 | - |
| 2 | 251542 | 1 | PIPE WELDMENT, LD2 AND BUS DUCT | - |
| 1 | 251510 | 1 | V PIPE & JACKET ASSEMBLY | - |

THIRD ANGLE PROJECTION

| REV | DWG | CHK | ZONE | DATE | CHANGES |
|---|---|---|---|---|---|
| B | ARH | DPO | | 02/20/03 | UPDATED SUBASSEMBLY VIEWS |
| A | MJK | DPO | | 11/25/02 | INITIAL RELEASE |

UNLESS OTHERWISE SPECIFIED

TOLERANCES: X.X ± 0.1 FRAC. ± 1/64; X.XX ± 0.03 Angles ± 1.00°; X.XXX ± 0.010 FINISH 125/ (Ra)

DO NOT SCALE PRINT

THREADS ARE CLASS 2
CHAMFER ENDS OF ALL SCREW THREADS 30°
CUT ROUND, 1.5 THREAD RELIEF ON MACHINED THREADS
BREAK EDGES .016 MAX. ON MACHINED WORK
REMOVE BURRS, WELD SPLATTER & LOOSE SCALE
IN ACCORDANCE WITH ASME Y14.5M & B46.1

SHOP ORDERS

| | | | |
|---|---|---|---|
| ACCT NO. | NO. REQD | SER NO. | - |
| DEL TO | | DATE ISSD | - |
| SURFACE TREATMT | - | DATE REQD | - |
| IDENT METHOD | TAG | | |
| PROJECT NUMBER | N/A | | |
| PROJECT NAME | N/A | | |
| DWG BY | KNOLLS | DATE | 03-Apr-02 |
| CHK BY | D. OSHATZ | DATE | 11/25/02 |
| APR BY | D. OSHATZ | DATE | 11/25/02 |

ERNEST ORLANDO LAWRENCE
BERKELEY NATIONAL LABORATORY
UNIVERSITY OF CALIFORNIA - BERKELEY

LHC IR FEEDBOX
CRYOGENICS
PIPING DFBXB IP1, RIGHT 24C350

| MICROFILMED: | DWG. TYPE | SHOWN ON | SCALE: 0.125 | DO NOT SCALE PRINTS |
|---|---|---|---|---|
| | ASSEM | | SHEET 1 OF 11 | |
| PATENT CLEAR: | DESIGN ACCT. NO. | CATEGORY CODE | DWG. NO. | SIZE / REV. |
| | Z5LCE2 | LH2001 | 2518716 | B |

DWG. NO. 2518716 SIZE B REV. 1

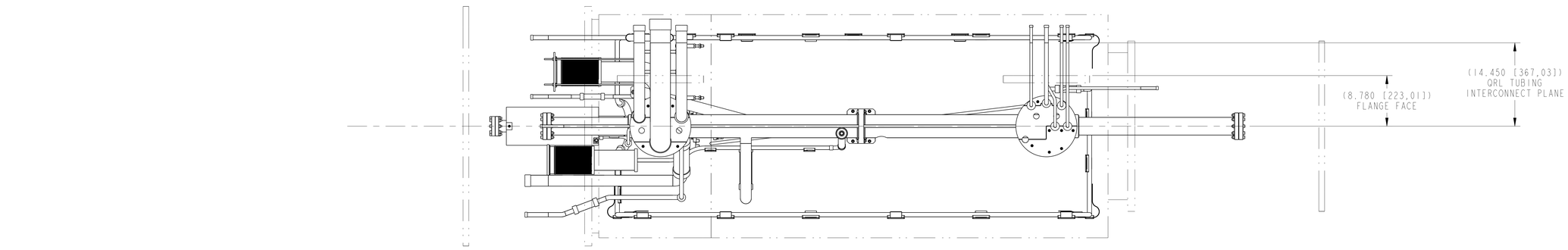


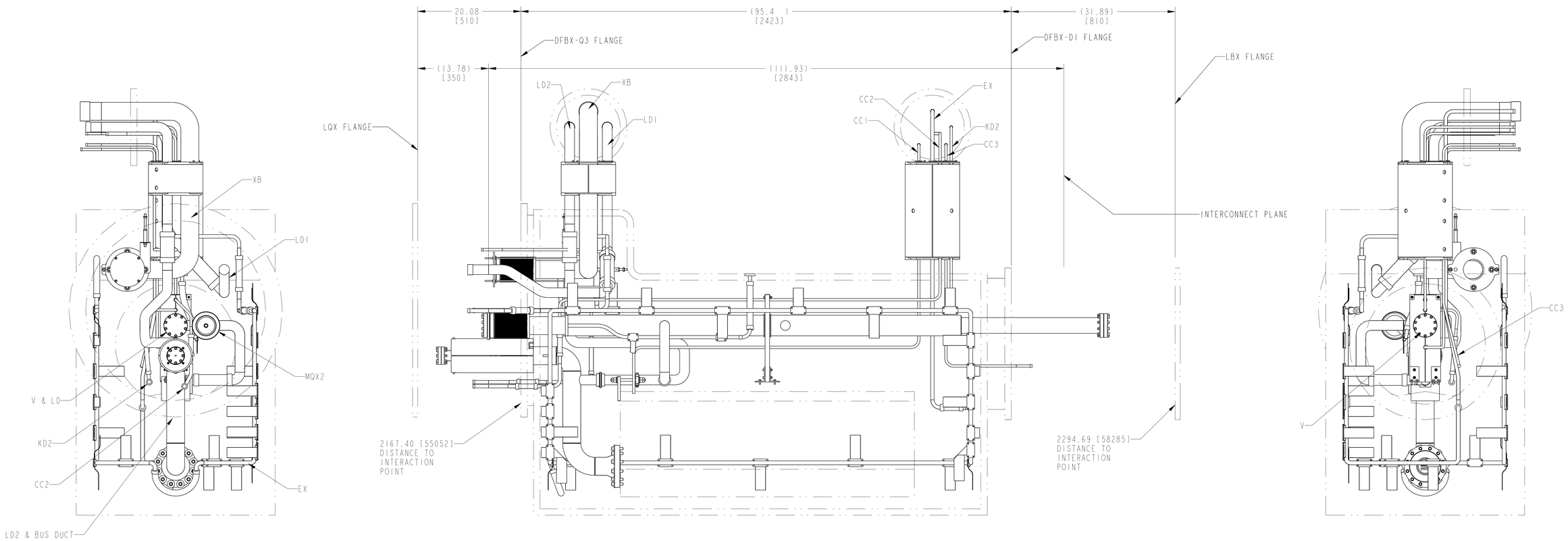


DWG. NO. 2518716 SIZE B REV. SH. 2

ERNEST ORLANDO LAWRENCE
BERKELEY NATIONAL LABORATORY
UNIVERSITY OF CALIFORNIA · BERKELEY

LHC IR FEEDBOX
CRYOGENICS
PIPING DFBXB IP1, RIGHT 24C350

| MICROFILMED: | DWG. TYPE | SHOWN ON | SCALE: 0.130 | DO NOT SCALE PRINTS |
|---|---|---|---|---|
| | ASSEM | | SHEET 2 OF 11 | |
| PATENT CLEAR: | DESIGN ACCT. NO. | CATEGORY CODE | DWG. NO. | SIZE / REV. |
| | Z5LCE2 | LH2001 | 2518716 | B |

# INSTRUMENTATION LINES

SHOWN FOR REFERENCE ONLY
NOTE: ALL WELDS MUST LEAVE TUBE
INTERIOR BURR FREE

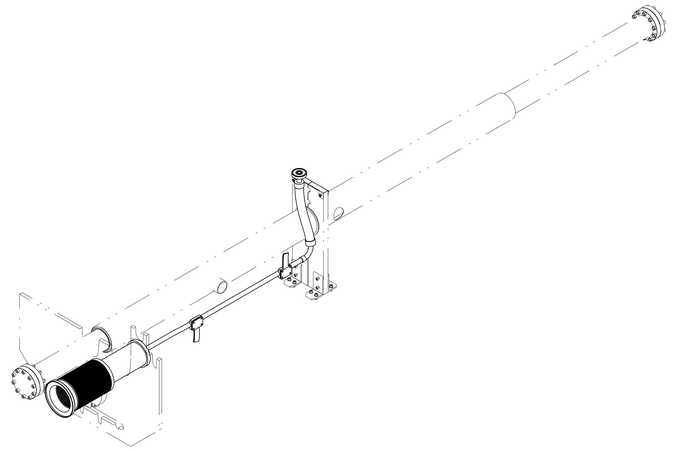

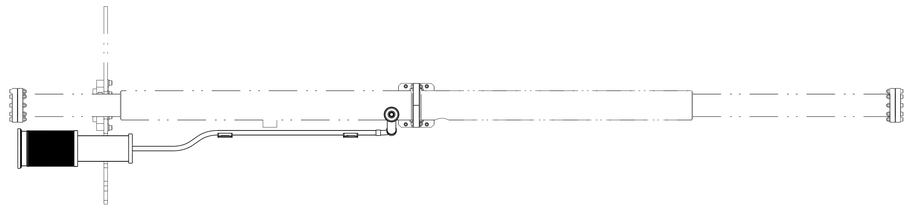

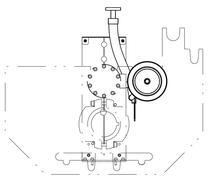

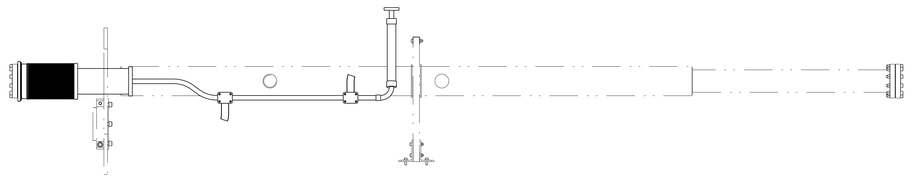

ERNEST ORLANDO LAWRENCE
BERKELEY NATIONAL LABORATORY
UNIVERSITY OF CALIFORNIA - BERKELEY

LHC IR FEEDBOX
CRYOGENICS
PIPING DFBXB IP1, RIGHT 24C350

| MICROFILMED: | DWG. TYPE | SHOWN ON | SCALE: 0.125 | DO NOT SCALE PRINTS |
|---|---|---|---|---|
| | ASSEM | . | SHEET 3 OF 11 | |
| PATENT CLEAR: | DESIGN ACCT. NO. | CATEGORY CODE | DWG. NO. | SIZE / REV. |
| | Z5LCE2 | LH2001 | 2518716 | B |

DWG. NO. 2518716 SIZE B REV. 3

# LD LINES

## SHOWN FOR REFERENCE ONLY

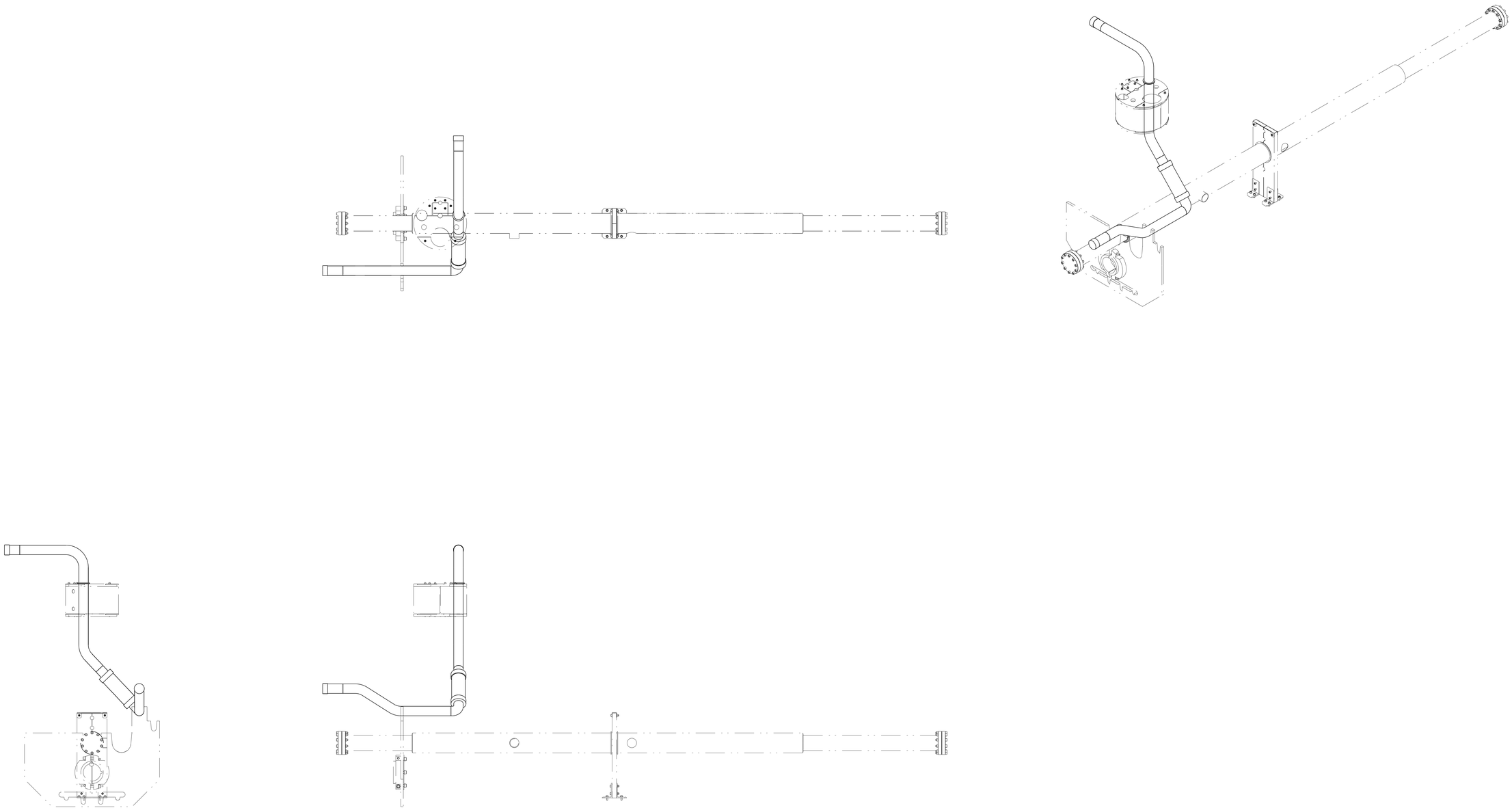

ERNEST ORLANDO LAWRENCE
BERKELEY NATIONAL LABORATORY
UNIVERSITY OF CALIFORNIA - BERKELEY

LHC IR FEEDBOX
CRYOGENICS
PIPING DFBXB IP1, RIGHT 24C350

| MICROFILMED: | DWG. TYPE | SHOWN ON | SCALE: 0.125 | DO NOT SCALE PRINTS |
|---|---|---|---|---|
| | ASSEM | . | SHEET 4 OF 11 | |
| PATENT CLEAR: | DESIGN ACCT. NO. | CATEGORY CODE | DWG. NO. | SIZE / REV. |
| | Z5LCE2 | LH2001 | 2518716 | B |

DWG. NO. 2518716 SIZE B REV. 4

# CC LINES

## SHOWN FOR REFERENCE ONLY

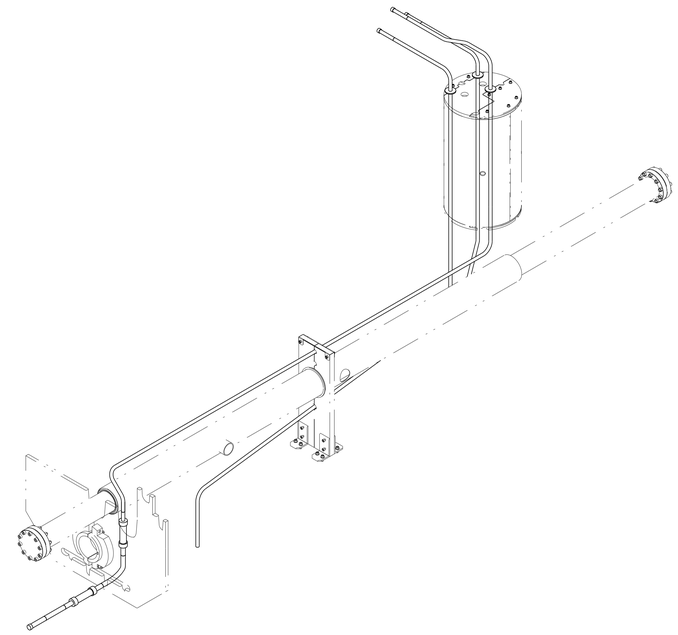

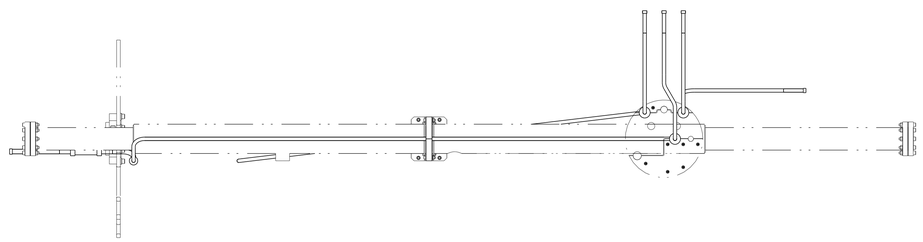

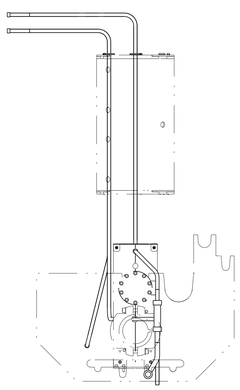

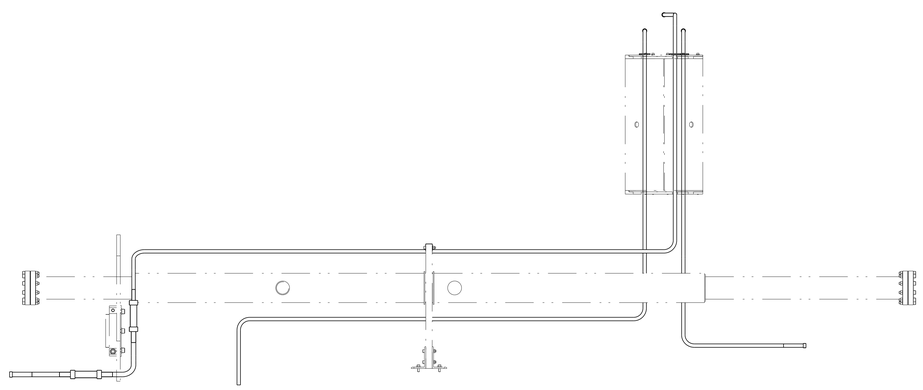

ERNEST ORLANDO LAWRENCE
BERKELEY NATIONAL LABORATORY
UNIVERSITY OF CALIFORNIA - BERKELEY

LHC IR FEEDBOX
CRYOGENICS
PIPING DFBXB IP1, RIGHT 24C350

| MICROFILMED: | DWG. TYPE | SHOWN ON | SCALE: 0.125 | DO NOT SCALE PRINTS |
|---|---|---|---|---|
| | ASSEM | - | SHEET 5 OF 11 | |
| PATENT CLEAR: | DESIGN ACCT. NO. | CATEGORY CODE | DWG. NO. | SIZE / REV. |
| | Z5LCE2 | LH2001 | 2518716 | B |

DWG. NO. 2518716 SIZE/REV. B SH. 5

# KD2 LINE

SHOWN FOR REFERENCE ONLY

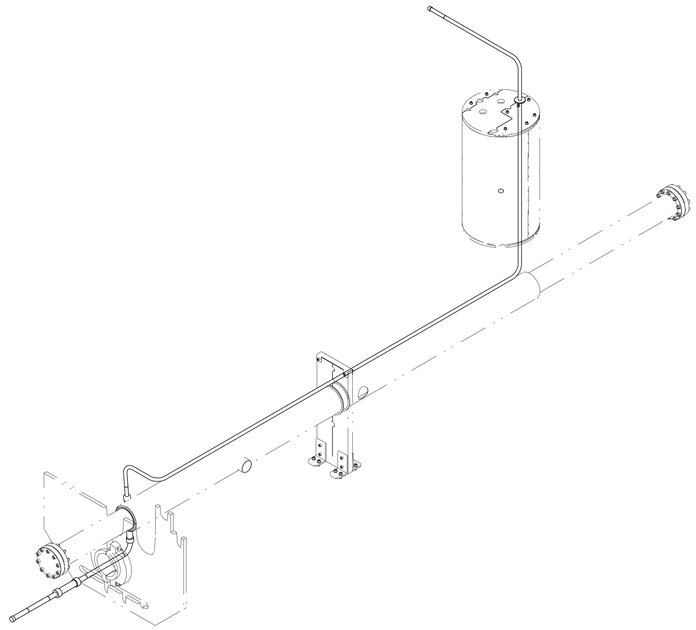

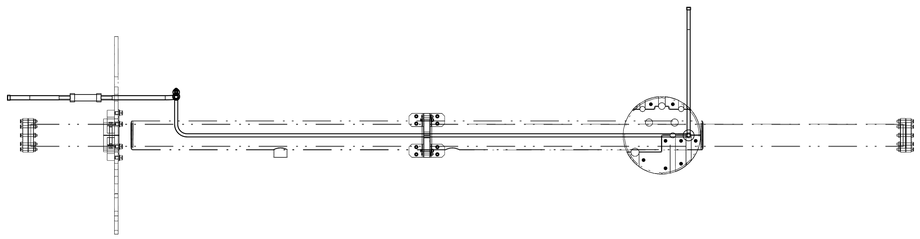

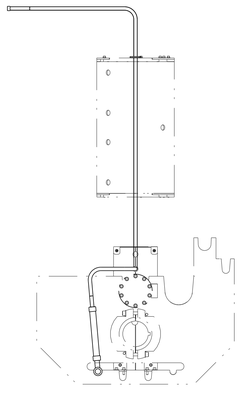

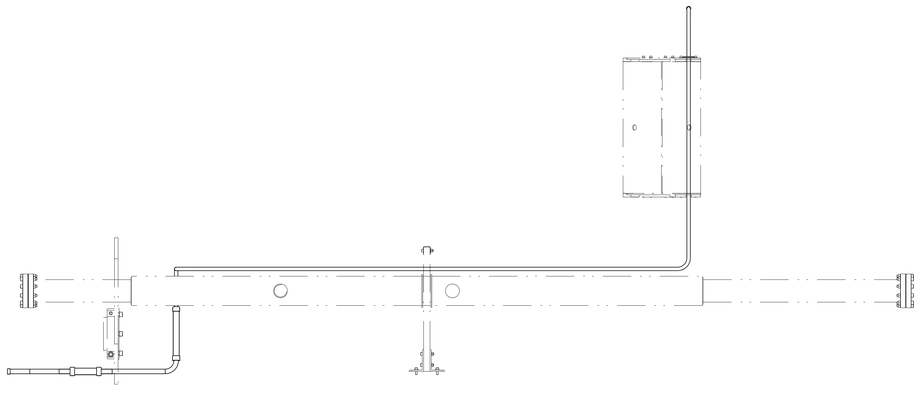

ERNEST ORLANDO LAWRENCE
BERKELEY NATIONAL LABORATORY
UNIVERSITY OF CALIFORNIA - BERKELEY

LHC IR FEEDBOX
CRYOGENICS
PIPING DFBXB IP1, RIGHT 24C350

| MICROFILMED: | DWG. TYPE | SHOWN ON | SCALE: 0.125 | DO NOT SCALE PRINTS |
|---|---|---|---|---|
| | ASSEM | . | SHEET 6 OF 11 | |
| PATENT CLEAR: | DESIGN ACCT. NO. | CATEGORY CODE | DWG. NO. | SIZE / REV. |
| | Z5LCE2 | LH2001 | 2518716 | B |

DWG. NO. 2518716 SHEET REV. 6 B

# E1 LINE

SHOWN FOR REFERENCE ONLY

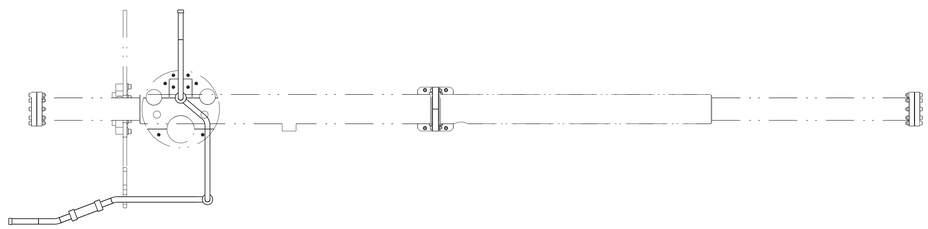

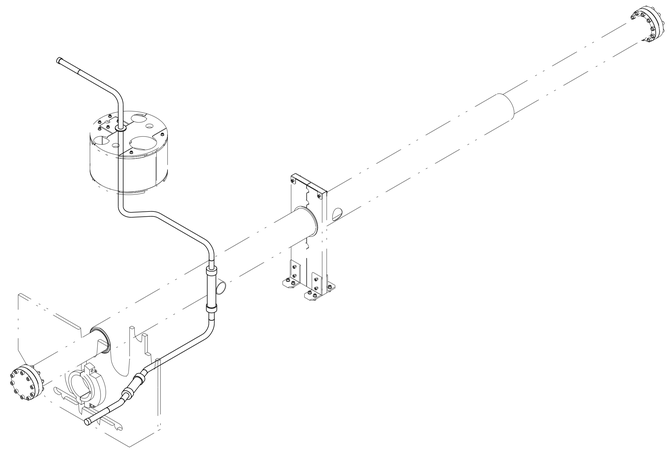

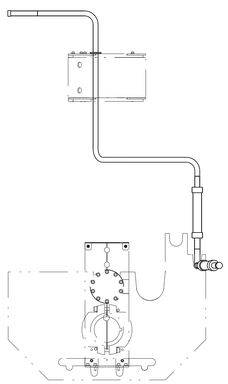

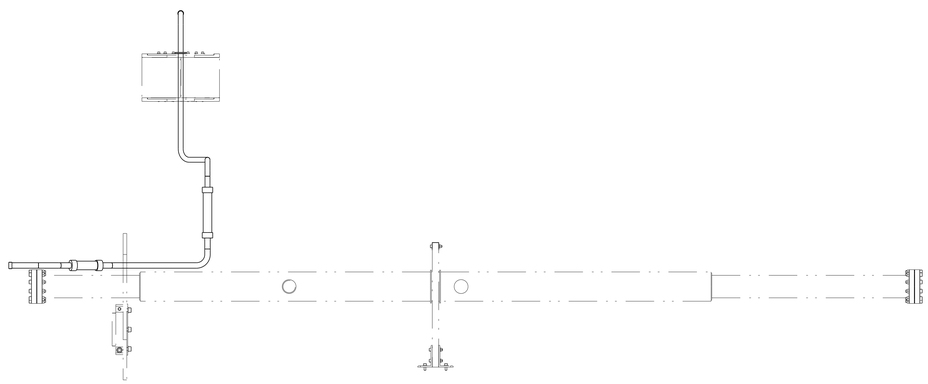

DWG. NO. 2518716 SIZE B REV. SH. 7

ERNEST ORLANDO LAWRENCE
BERKELEY NATIONAL LABORATORY
UNIVERSITY OF CALIFORNIA - BERKELEY

LHC IR FEEDBOX
CRYOGENICS
PIPING DFBXB IP1, RIGHT 24C350

| | | | | |
|---|---|---|---|---|
| MICROFILMED: | DWG. TYPE: ASSEM | SHOWN ON: - | SCALE: 0.125 | DO NOT SCALE PRINTS |
| | | | SHEET 7 OF 11 | |
| PATENT CLEAR: | DESIGN ACCT. NO.: Z5LCE2 | CATEGORY CODE: LH2001 | DWG. NO.: 2518716 | SIZE: B / REV.: |

# EX LINE

## SHOWN FOR REFERENCE ONLY

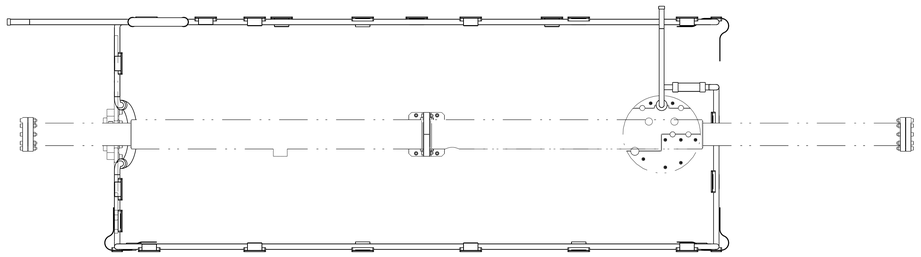

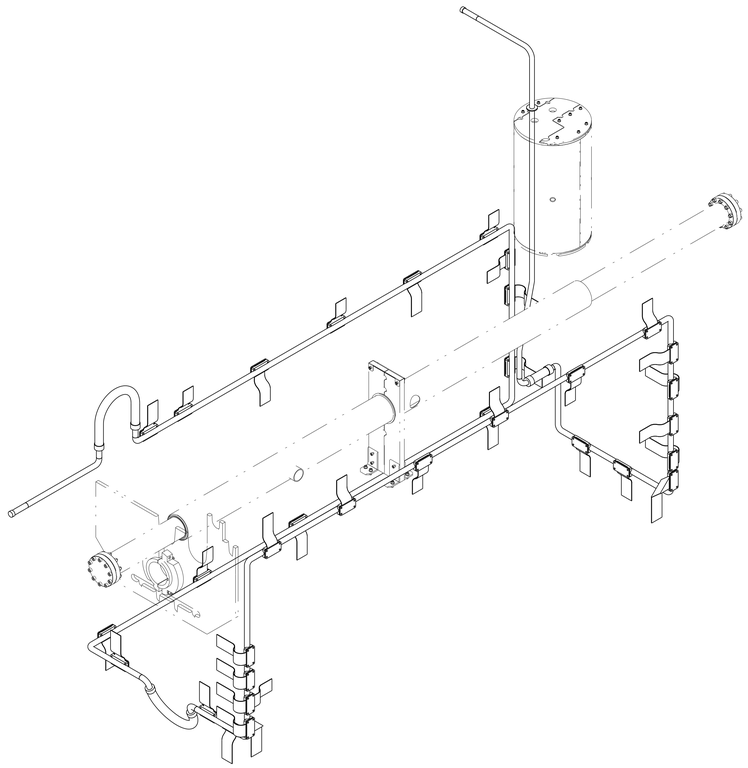

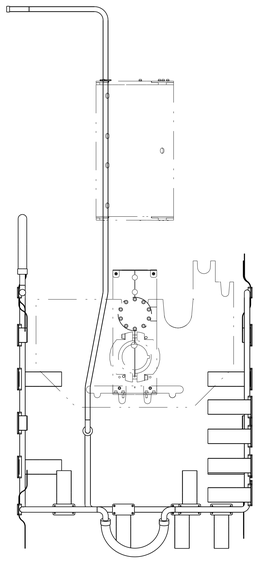

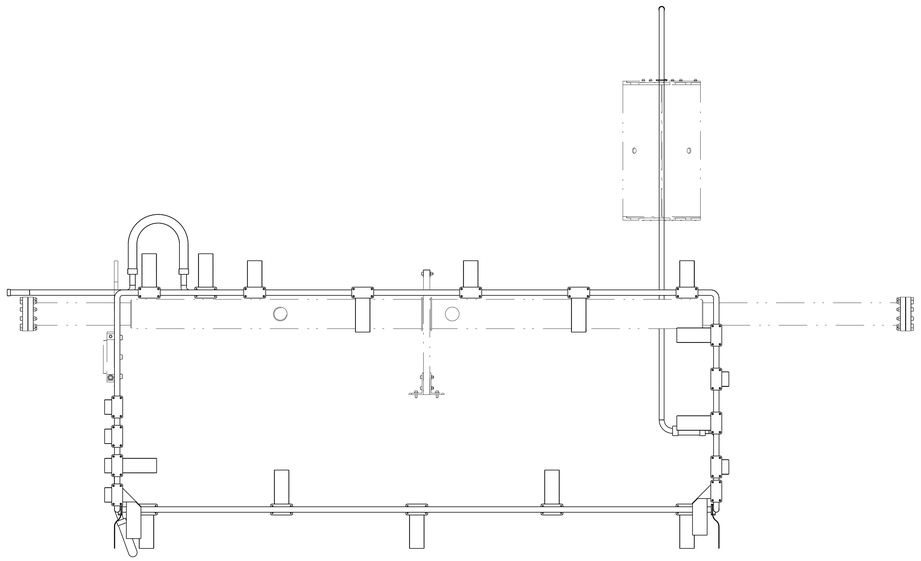

ERNEST ORLANDO LAWRENCE
BERKELEY NATIONAL LABORATORY
UNIVERSITY OF CALIFORNIA - BERKELEY

LHC IR FEEDBOX
CRYOGENICS
PIPING DFBXB IP1, RIGHT 24C350

| MICROFILMED: | DWG. TYPE | SHOWN ON | SCALE: 0.125 | DO NOT SCALE PRINTS |
|---|---|---|---|---|
| | ASSEM | . | SHEET 8 OF 11 | |
| PATENT CLEAR: | DESIGN ACCT. NO. | CATEGORY CODE | DWG. NO. | SIZE / REV. |
| | Z5LCE2 | LH2001 | 2518716 | B |

DWG. NO. 2518716 SIZE B REV. SH. 8

# XB & CY LINES

## SHOWN FOR REFERENCE ONLY

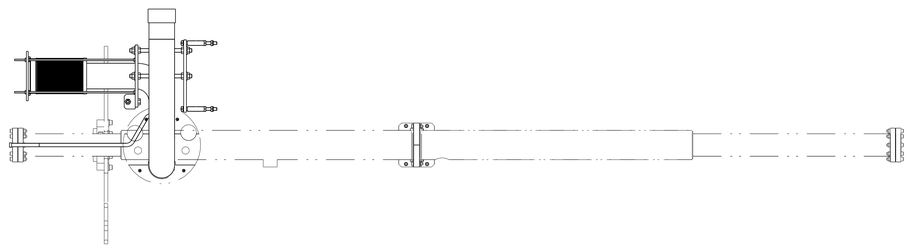

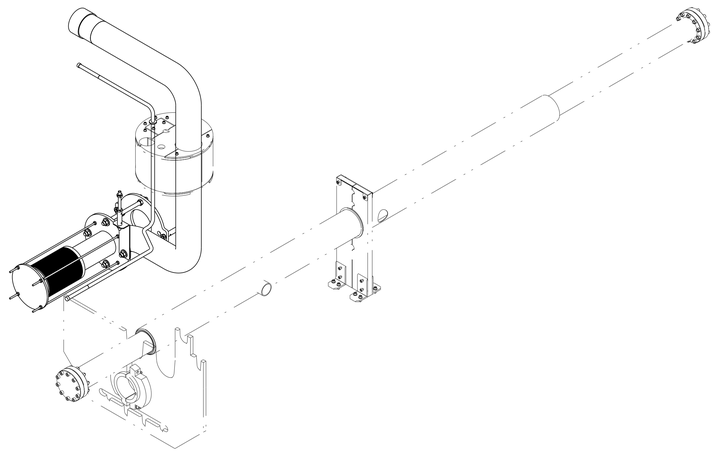

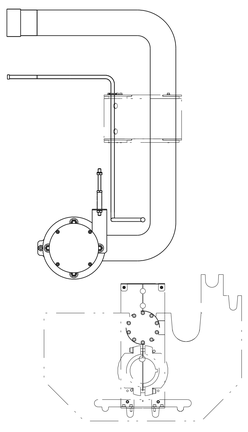

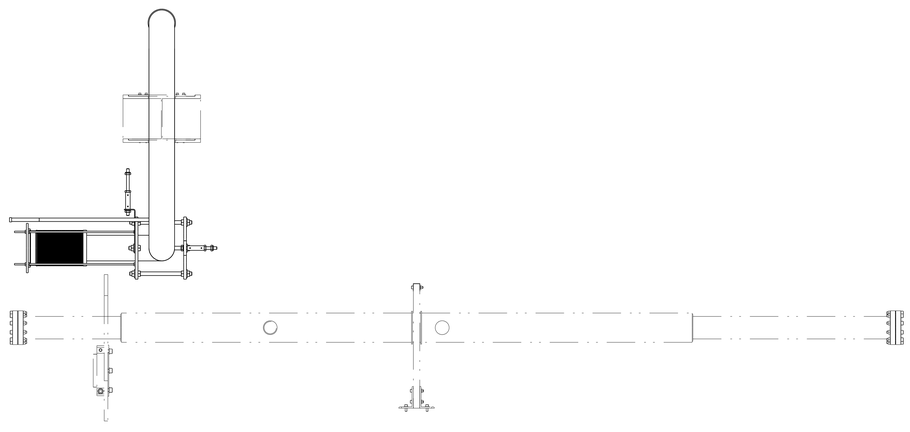

ERNEST ORLANDO LAWRENCE
BERKELEY NATIONAL LABORATORY
UNIVERSITY OF CALIFORNIA - BERKELEY

LHC IR FEEDBOX
CRYOGENICS
PIPING DFBXB IP1, RIGHT 24C350

| MICROFILMED: | DWG. TYPE | SHOWN ON | SCALE: 0.125 | DO NOT SCALE PRINTS |
|---|---|---|---|---|
| | ASSEM | - | SHEET 9 OF 11 | |
| PATENT CLEAR: | DESIGN ACCT. NO. | CATEGORY CODE | DWG. NO. | SIZE / REV. |
| | Z5LCE2 | LH2001 | 2518716 | B |

DWG. NO. 2518716 SIZE/REV. B SH. 9

# BEAM TUBE

SHOWN FOR REFERENCE ONLY

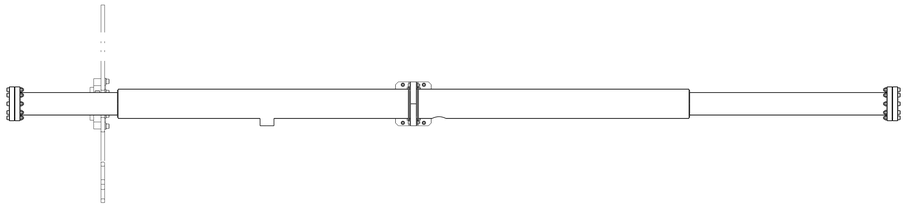

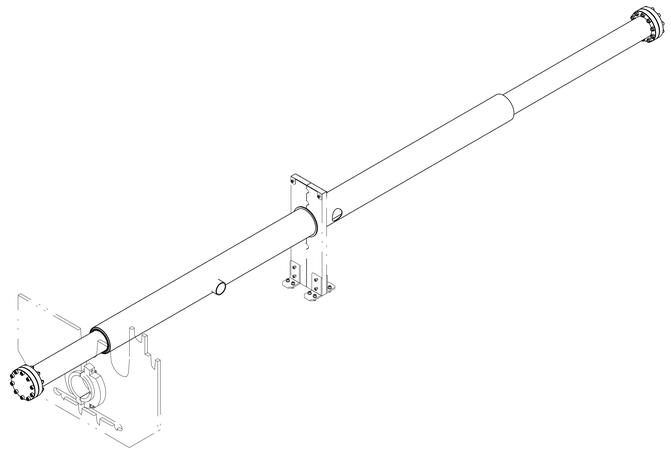

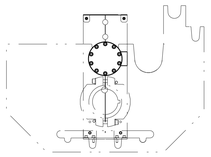

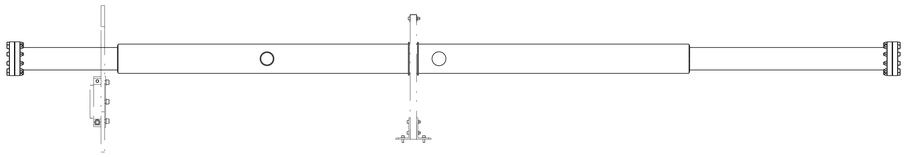

ERNEST ORLANDO LAWRENCE
BERKELEY NATIONAL LABORATORY
UNIVERSITY OF CALIFORNIA - BERKELEY

LHC IR FEEDBOX
CRYOGENICS
PIPING DFBXB IP1, RIGHT 24C350

| MICROFILMED: | DWG. TYPE | SHOWN ON | SCALE: 0.125 | DO NOT SCALE PRINTS |
|---|---|---|---|---|
| | ASSEM | - | SHEET 10 OF 11 | |
| PATENT CLEAR: | DESIGN ACCT. NO. | CATEGORY CODE | DWG. NO. | SIZE / REV. |
| | Z5LCE2 | LH2001 | 2518716 | B |

DWG. NO. 2518716 SIZE B REV. 10

# BUS DUCT ASSEMBLY

SHOWN FOR REFERENCE ONLY

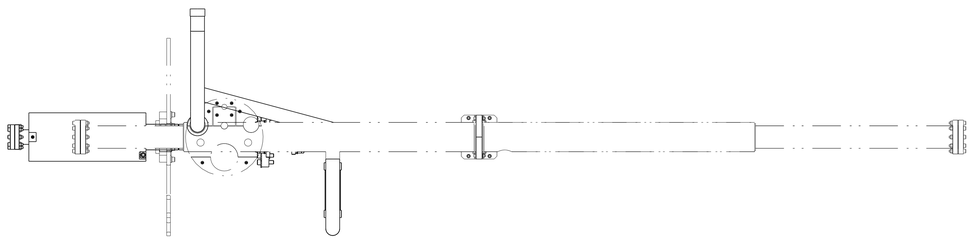

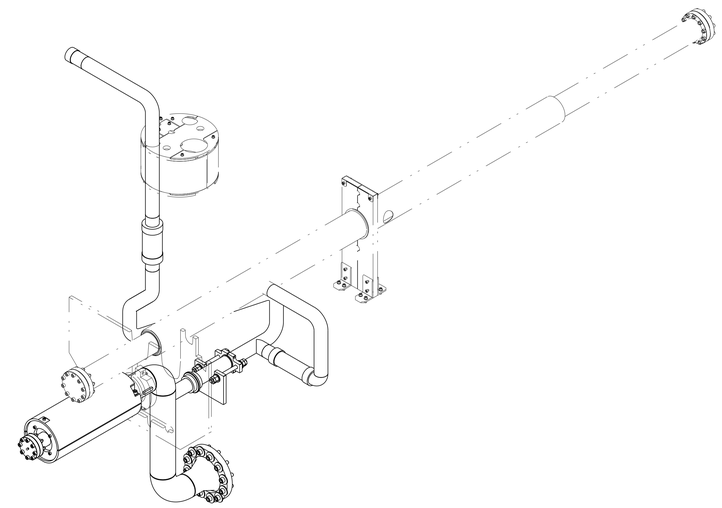

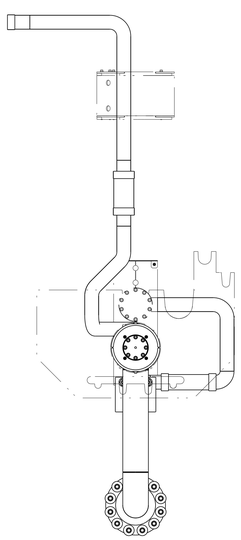

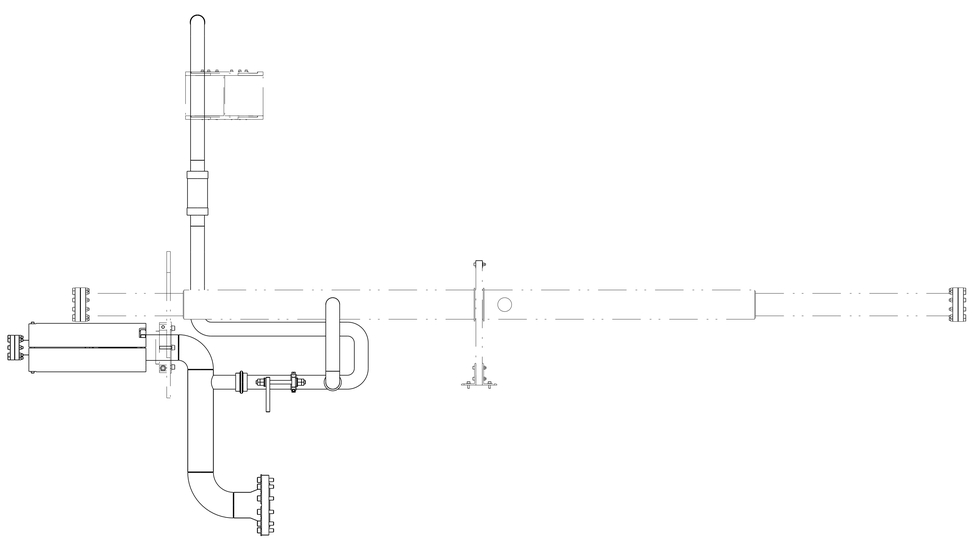

ERNEST ORLANDO LAWRENCE
BERKELEY NATIONAL LABORATORY
UNIVERSITY OF CALIFORNIA - BERKELEY

LHC IR FEEDBOX
CRYOGENICS
PIPING DFBXB IP1, RIGHT 24C350

| MICROFILMED: | DWG. TYPE | SHOWN ON | SCALE: 0.125 | DO NOT SCALE PRINTS |
|---|---|---|---|---|
| | ASSEM | . | SHEET 11 OF 11 | |
| PATENT CLEAR: | DESIGN ACCT. NO. | CATEGORY CODE | DWG. NO. | SIZE / REV. |
| | Z5LCE2 | LH2001 | 2518716 | B |

DWG. NO. 2518716 SIZE/REV. B JOB 11