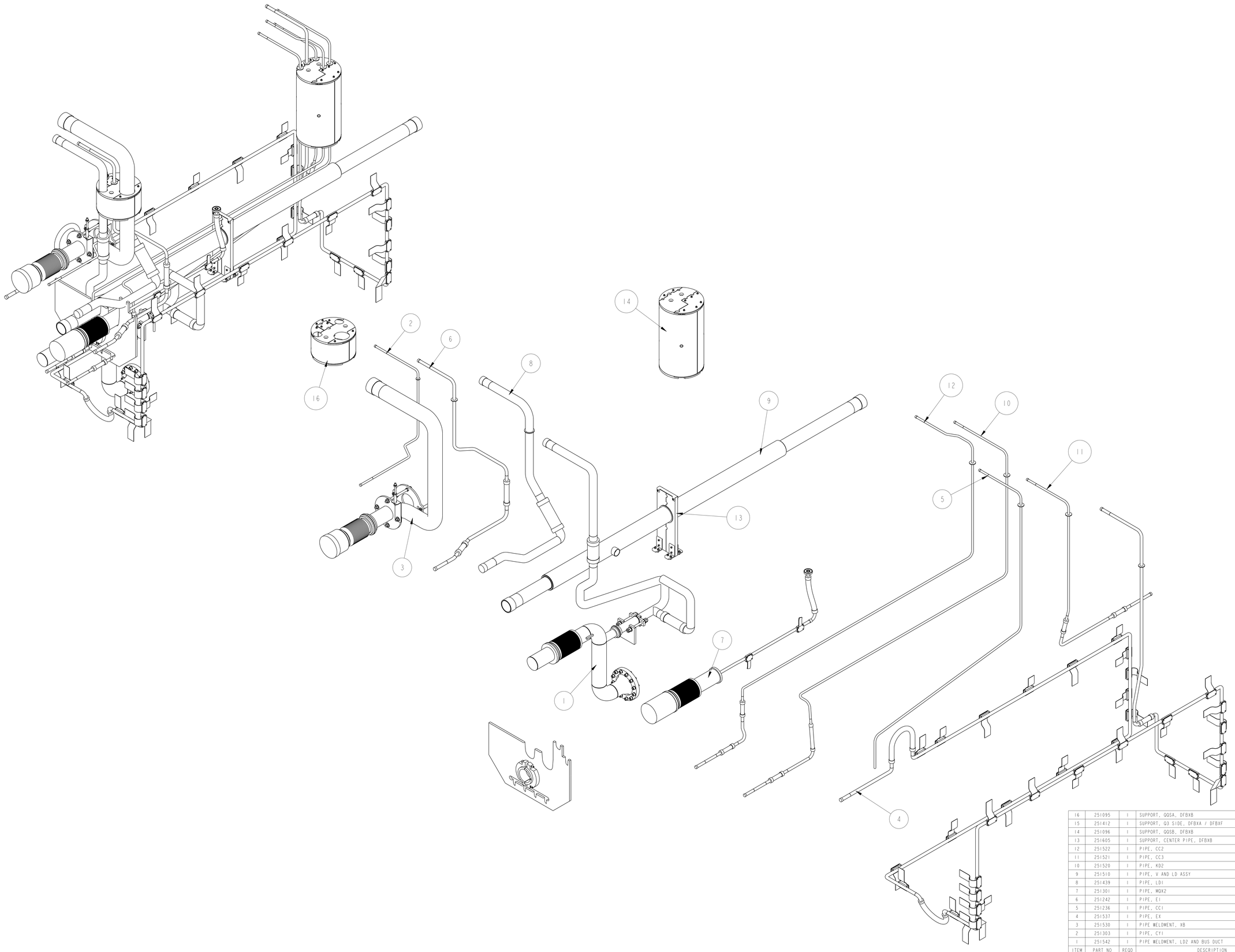

ITEM	PART NO.	REQD	DESCRIPTION	MATERIAL
16	251095	1	SUPPORT, QQSA, DFBXB	NEMA G10
15	251412	1	SUPPORT, Q3 SIDE, DFBXA / DFBXF	NEMA G10
14	251096	1	SUPPORT, QQSB, DFBXB	NEMA G10
13	251605	1	SUPPORT, CENTER PIPE, DFBXB	-
12	251522	1	PIPE, CC2	-
11	251521	1	PIPE, CC3	-
10	251520	1	PIPE, KD2	-
9	251510	1	PIPE, V AND LD ASSY	-
8	251439	1	PIPE, LD1	-
7	251301	1	PIPE, MQX2	-
6	251242	1	PIPE, E1	-
5	251236	1	PIPE, CC1	-
4	251537	1	PIPE, EX	-
3	251530	1	PIPE WELDMENT, XB	-
2	251303	1	PIPE, CY1	-
1	251542	1	PIPE WELDMENT, LD2 AND BUS DUCT	-

THIRD ANGLE PROJECTION

REV	DWG	CHK	ZONE	DATE	CHANGES
A	MJK	DPO		11/25/02	INITIAL RELEASE

UNLESS OTHERWISE SPECIFIED

TOLERANCES
X.X ± 0.1 FRAC. ± 1/64
X.XX ± 0.03 Angles ± 1.00°
X.XXX ± 0.010 FINISH 125 √RMS

DO NOT SCALE PRINT

THREADS ARE CLASS 2
CHAMFER ENDS OF ALL SCREW THREADS 30°
CUT ROUND, 1.5 THREAD RELIEF ON MACHINED THREADS
BREAK EDGES .016 MAX. ON MACHINED WORK
REMOVE BURRS, WELD SPLATTER & LOOSE SCALE
IN ACCORDANCE WITH ASME Y14.5M & B46.1

SHOP ORDERS

ACCT NO. | NI | REQD
REL NO.
SO NO.
SURFACE TREATMT.
IDENT METHOD TAG
PROJECT NUMBER N/A
PROJECT NAME N/A
DWG BY KNOLLS — DATE 03-Apr-02
CHK BY D. OSHATZ — DATE 11/25/02
APR BY D. OSHATZ — DATE 11/25/02

ECN NO.
ISSD DATE
REQD DATE

ERNEST ORLANDO LAWRENCE BERKELEY NATIONAL LABORATORY
UNIVERSITY OF CALIFORNIA - BERKELEY

LHC IR FEEDBOX
CRYOGENICS
PIPING DFBXB IP1, RIGHT 24C350

MICROFILMED: | DWG. TYPE: ASSEM | SHOWN ON: . | SCALE: 0.125 | DO NOT SCALE PRINTS
PATENT CLEAR: | DESIGN ACCT. NO.: Z5LCE2 | CATEGORY CODE: LH2001 | DWG. NO.: 2518716 | SIZE: A | REV.: A
SHEET 1 OF 11

DWG. NO. 2518716 | REV. A | SHEET 1 OF 11

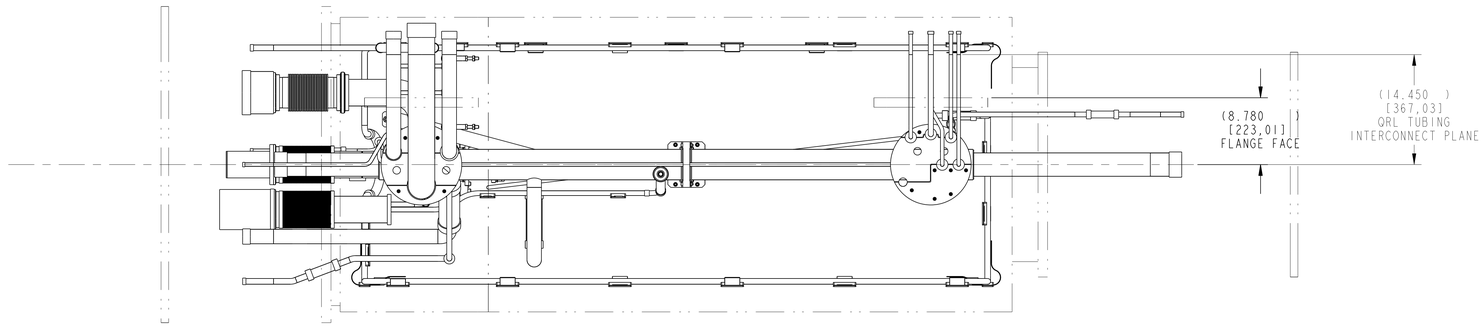

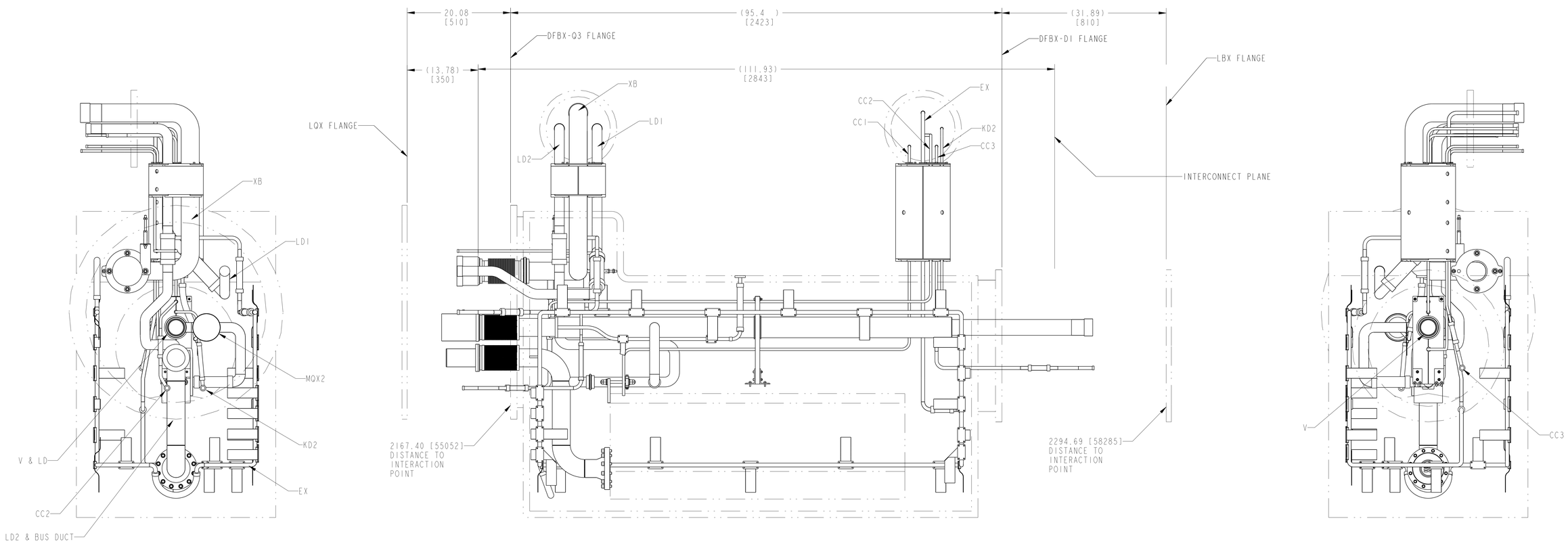

THIRD ANGLE PROJECTION

ERNEST ORLANDO LAWRENCE
BERKELEY NATIONAL LABORATORY
UNIVERSITY OF CALIFORNIA - BERKELEY

LHC IR FEEDBOX
CRYOGENICS
PIPING DFBXB IP1, RIGHT 24C350

MICROFILMED:	DWG. TYPE	SHOWN ON	SCALE: 0.130	DO NOT SCALE PRINTS
	ASSEM	.	SHEET 2 OF 11	
PATENT CLEAR:	DESIGN ACCT. NO.	CATEGORY CODE	DWG. NO.	SIZE / REV.
	Z5LCE2	LH2001	2518716	A

DWG. NO. 2518716 SIZE/REV A SH. 2

INSTRUMENTATION LINES

SHOWN FOR REFERENCE ONLY
NOTE: ALL WELDS MUST LEAVE TUBE
INTERIOR BURR FREE

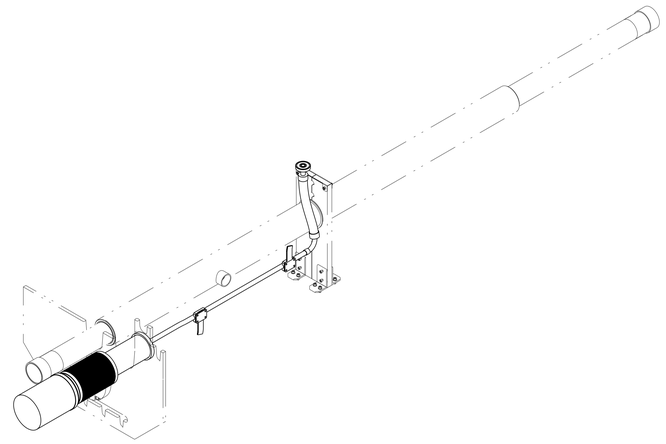

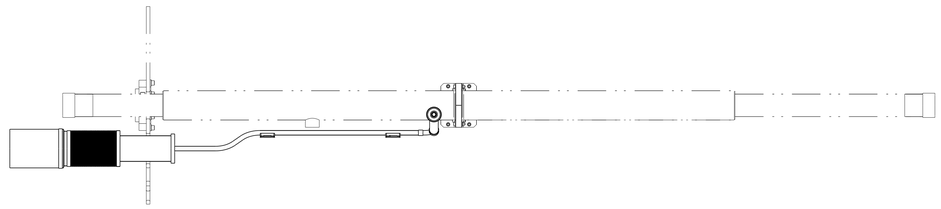

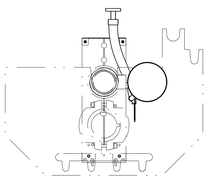

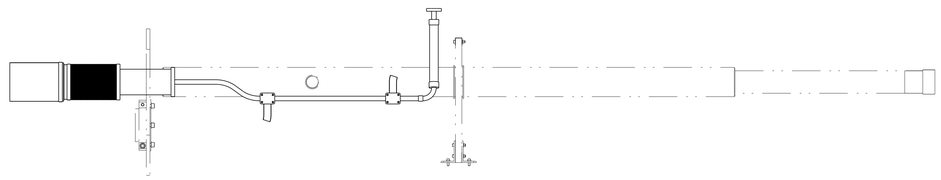

THIRD ANGLE PROJECTION

ERNEST ORLANDO LAWRENCE
BERKELEY NATIONAL LABORATORY
UNIVERSITY OF CALIFORNIA - BERKELEY

LHC IR FEEDBOX
CRYOGENICS
PIPING DFBXB IP1, RIGHT 24C350

MICROFILMED:	DWG. TYPE	SHOWN ON	SCALE: 0.125	DO NOT SCALE PRINTS
	ASSEM	.	SHEET 3 OF 11	
PATENT CLEAR:	DESIGN ACCT. NO.	CATEGORY CODE	DWG. NO.	SIZE / REV.
	Z5LCE2	LH2001	2518716	A

DWG. NO. 2518716 SHT 3 REV A

LD LINES

SHOWN FOR REFERENCE ONLY

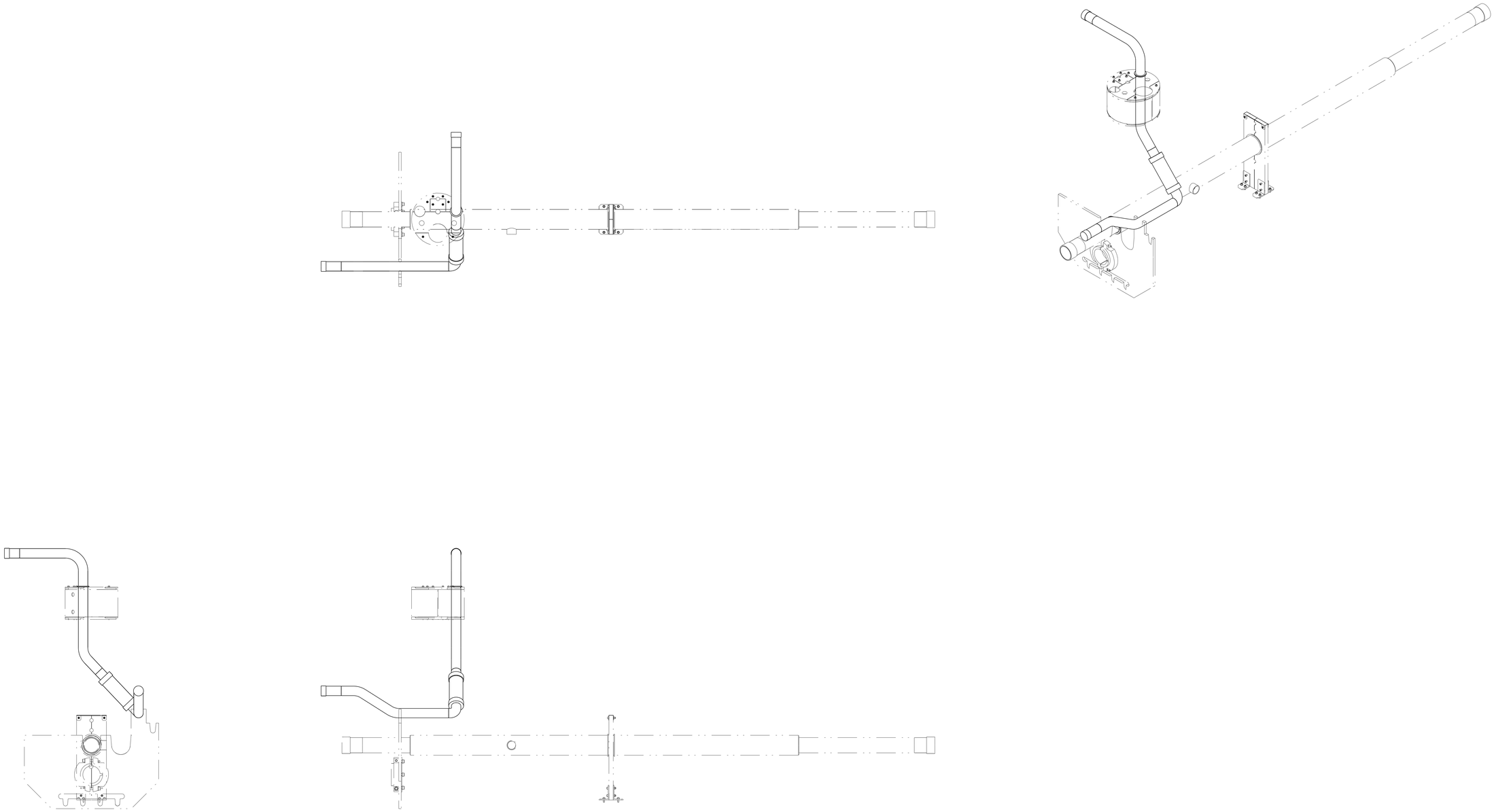

ERNEST ORLANDO LAWRENCE
BERKELEY NATIONAL LABORATORY
UNIVERSITY OF CALIFORNIA - BERKELEY

LHC IR FEEDBOX
CRYOGENICS
PIPING DFBXB IP1, RIGHT 24C350

MICROFILMED:	DWG. TYPE	SHOWN ON	SCALE: 0.125	DO NOT SCALE PRINTS
	ASSEM	.	SHEET 4 OF 11	
PATENT CLEAR:	DESIGN ACCT. NO.	CATEGORY CODE	DWG. NO.	SIZE / REV.
	Z5LCE2	LH2001	2518716	A

DWG. NO. 2518716 SIZE A REV. 4

CC LINES

SHOWN FOR REFERENCE ONLY

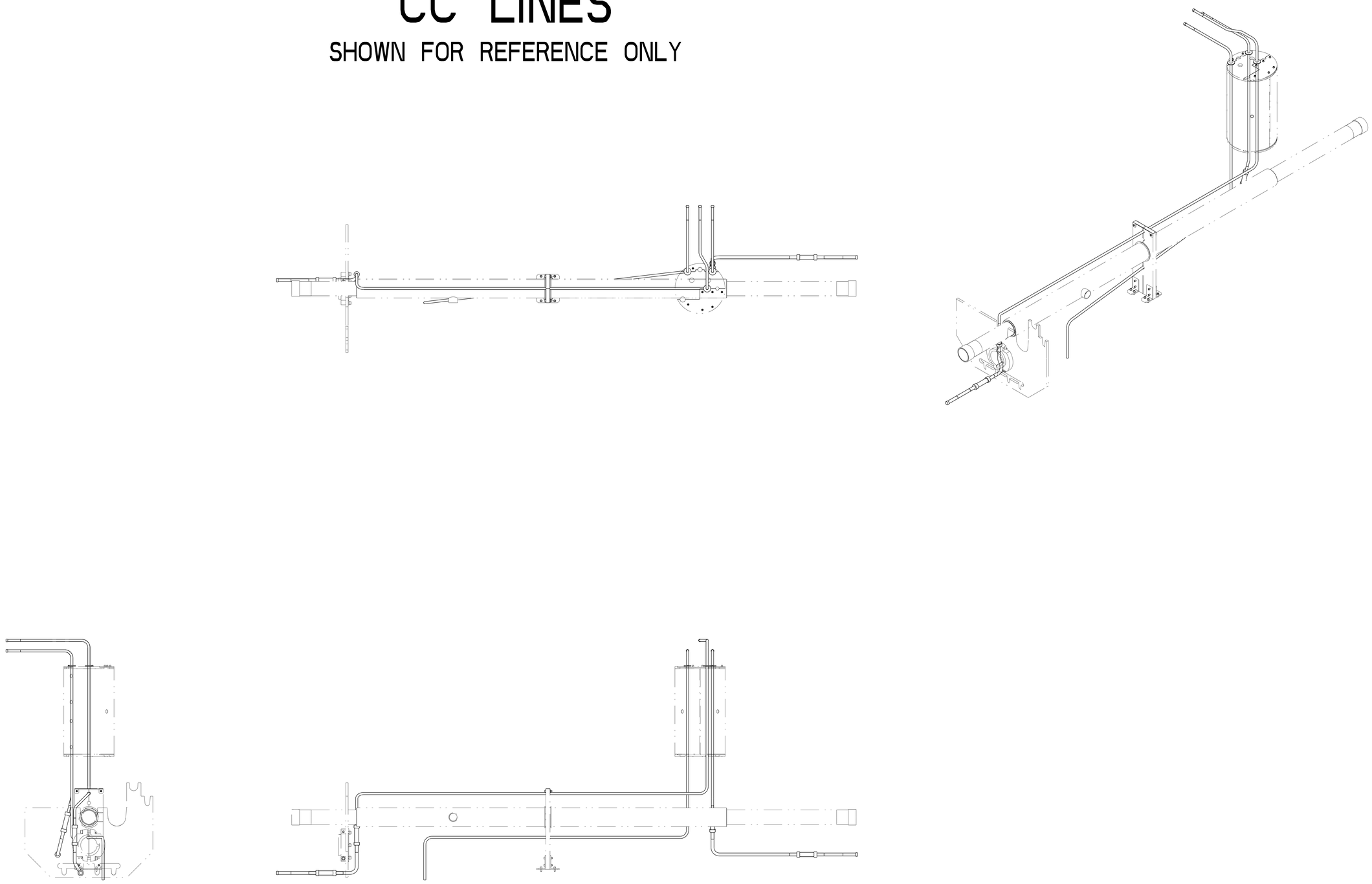

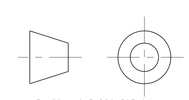

THIRD ANGLE PROJECTION

ERNEST ORLANDO LAWRENCE
BERKELEY NATIONAL LABORATORY
UNIVERSITY OF CALIFORNIA - BERKELEY

LHC IR FEEDBOX
CRYOGENICS
PIPING DFBXB IP1, RIGHT 24C350

MICROFILMED:	DWG. TYPE	SHOWN ON	SCALE: 0.125	DO NOT SCALE PRINTS
	ASSEM	.	SHEET 5 OF 11	
PATENT CLEAR:	DESIGN ACCT. NO.	CATEGORY CODE	DWG. NO.	SIZE / REV.
	Z5LCE2	LH2001	2518716	A

DWG. NO. 2518716 SIZE A REV. 5

KD2 LINE

SHOWN FOR REFERENCE ONLY

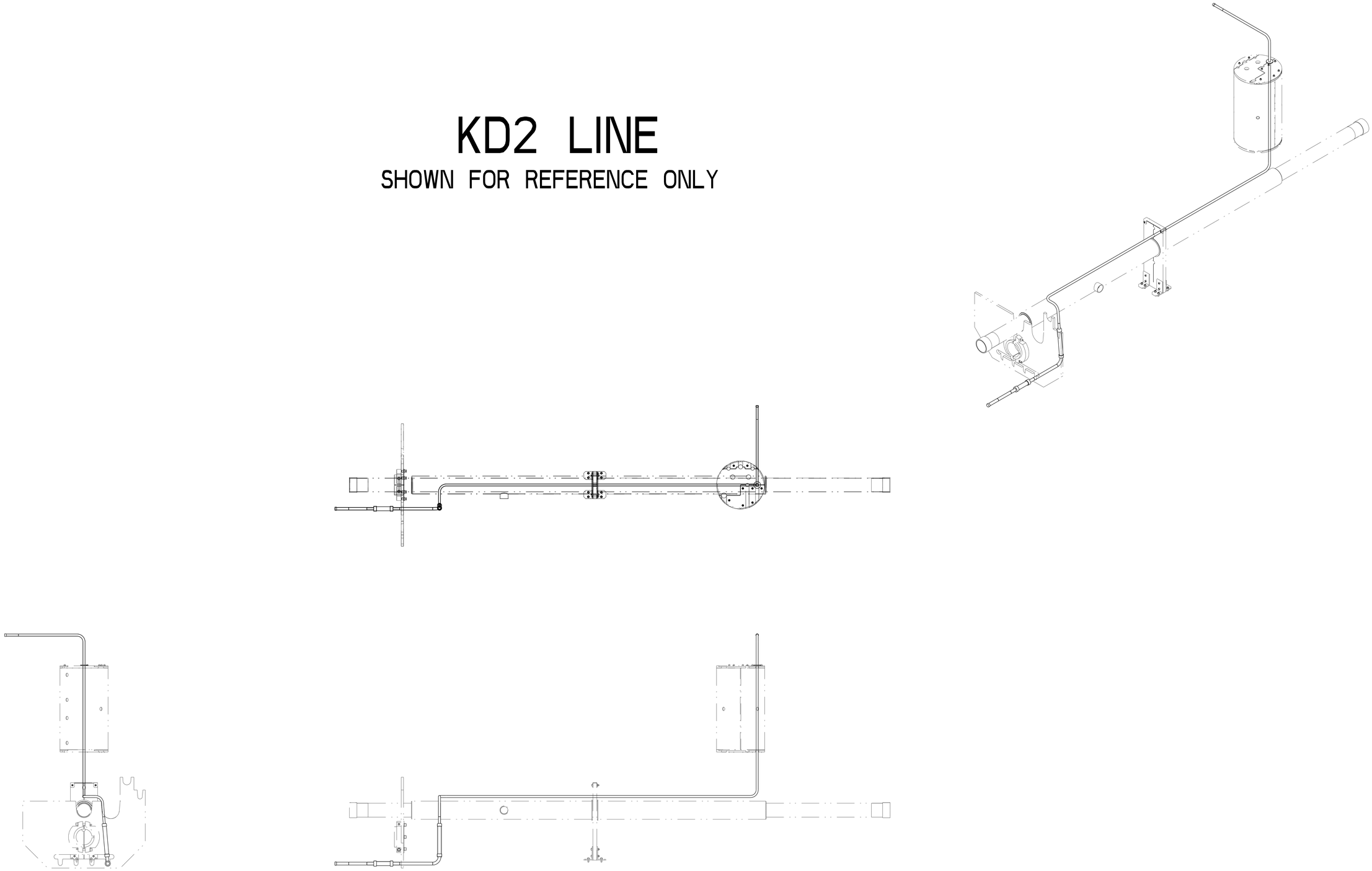

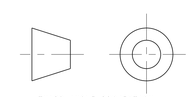

THIRD ANGLE PROJECTION

ERNEST ORLANDO LAWRENCE
BERKELEY NATIONAL LABORATORY
UNIVERSITY OF CALIFORNIA - BERKELEY

LHC IR FEEDBOX
CRYOGENICS
PIPING DFBXB IP1, RIGHT 24C350

MICROFILMED:	DWG. TYPE	SHOWN ON	SCALE: 0.125	DO NOT SCALE PRINTS
	ASSEM	.	SHEET 6 OF 11	
PATENT CLEAR:	DESIGN ACCT. NO.	CATEGORY CODE	DWG. NO.	SIZE / REV.
	Z5LCE2	LH2001	2518716	A

DWG. NO. 2518716 SIZE A REV. 6

E1 LINE

SHOWN FOR REFERENCE ONLY

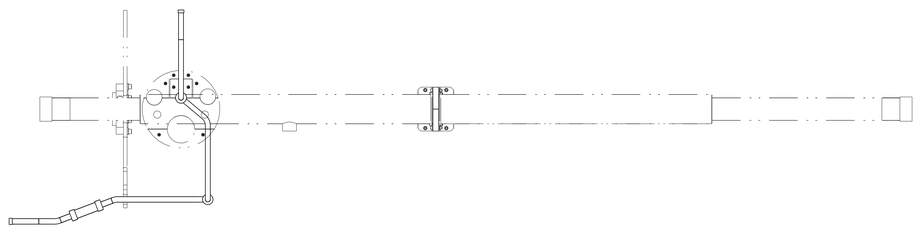

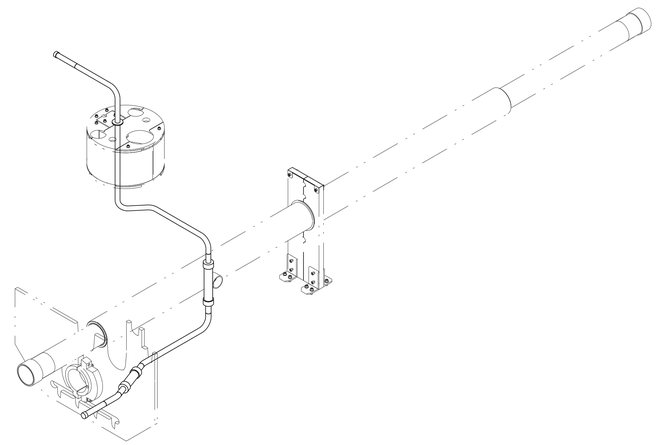

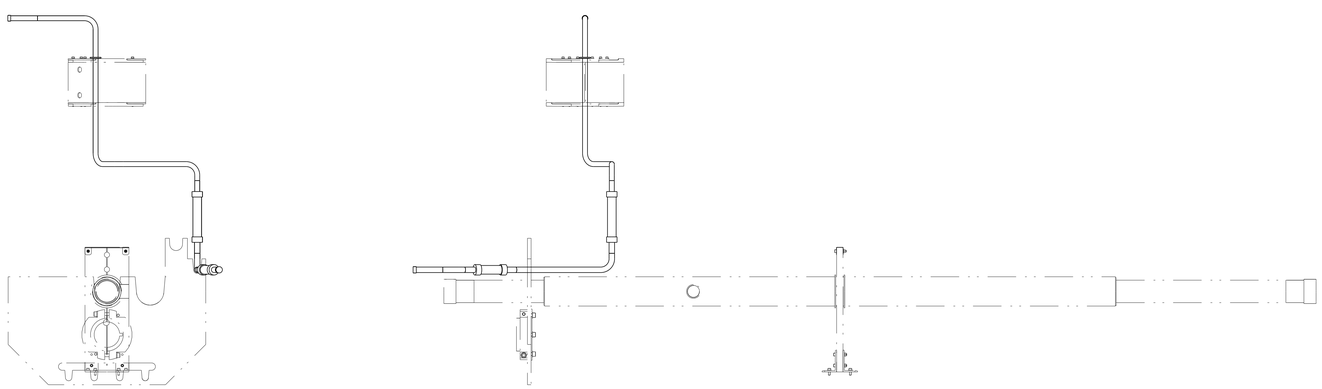

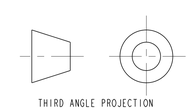

THIRD ANGLE PROJECTION

ERNEST ORLANDO LAWRENCE
BERKELEY NATIONAL LABORATORY
UNIVERSITY OF CALIFORNIA - BERKELEY

LHC IR FEEDBOX
CRYOGENICS
PIPING DFBXB IP1, RIGHT 24C350

MICROFILMED:	DWG. TYPE	SHOWN ON	SCALE: 0.125	DO NOT SCALE PRINTS
	ASSEM	.	SHEET 7 OF 11	
PATENT CLEAR:	DESIGN ACCT. NO.	CATEGORY CODE	DWG. NO.	SIZE / REV.
	Z5LCE2	LH2001	2518716	A

DWG. NO. 2518716 SIZE A REV. 7

EX LINE

SHOWN FOR REFERENCE ONLY

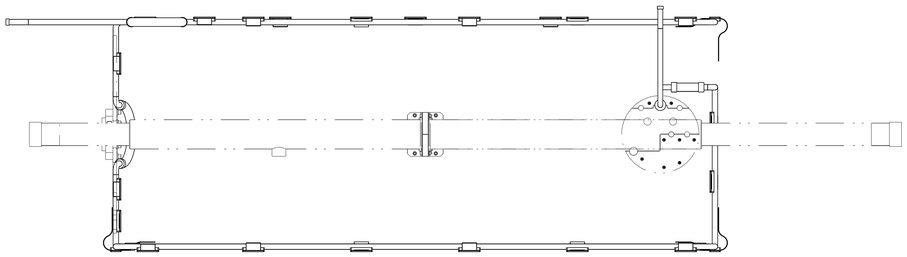

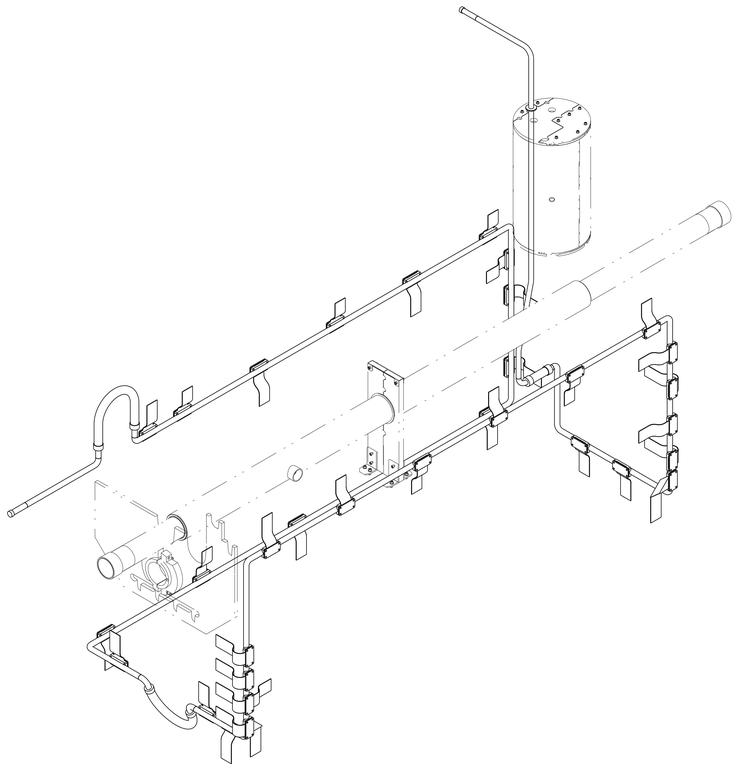

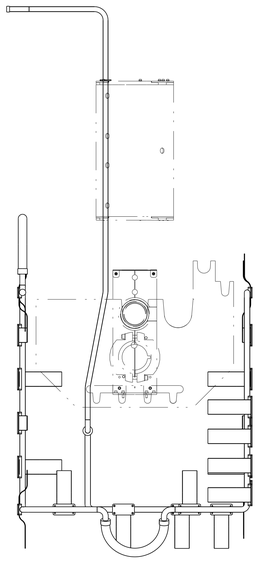

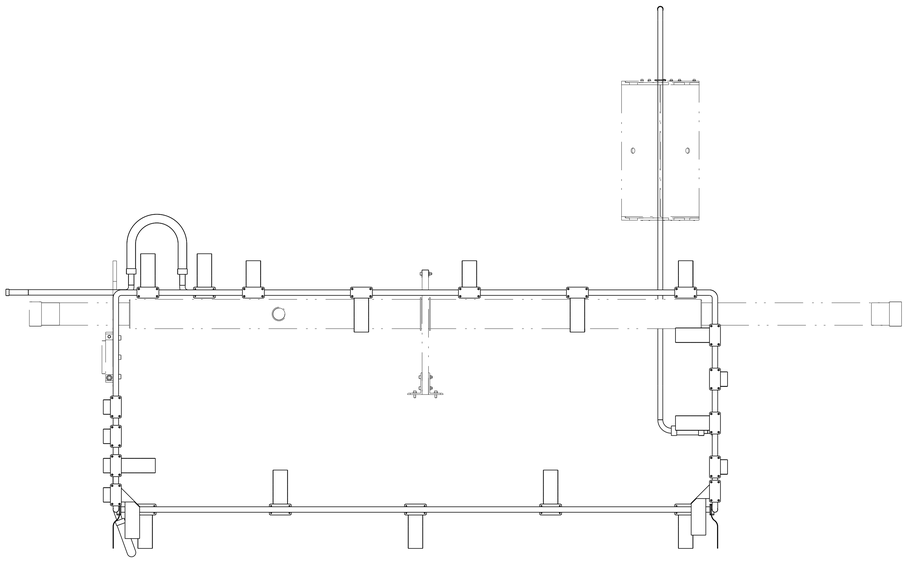

THIRD ANGLE PROJECTION

ERNEST ORLANDO LAWRENCE
BERKELEY NATIONAL LABORATORY
UNIVERSITY OF CALIFORNIA - BERKELEY

LHC IR FEEDBOX
CRYOGENICS
PIPING DFBXB IP1, RIGHT 24C350

MICROFILMED:	DWG. TYPE	SHOWN ON	SCALE: 0.125	DO NOT SCALE PRINTS
	ASSEM	-	SHEET 8 OF 11	
PATENT CLEAR:	DESIGN ACCT. NO.	CATEGORY CODE	DWG. NO.	SIZE / REV.
	Z5LCE2	LH2001	2518716	A

DWG. NO. 2518716 SIZE/REV. A 8

XB & CY LINES

SHOWN FOR REFERENCE ONLY

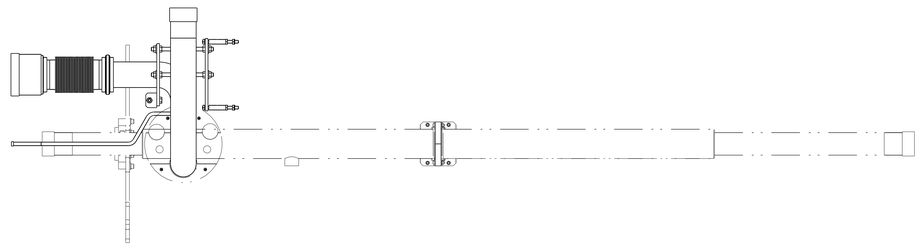

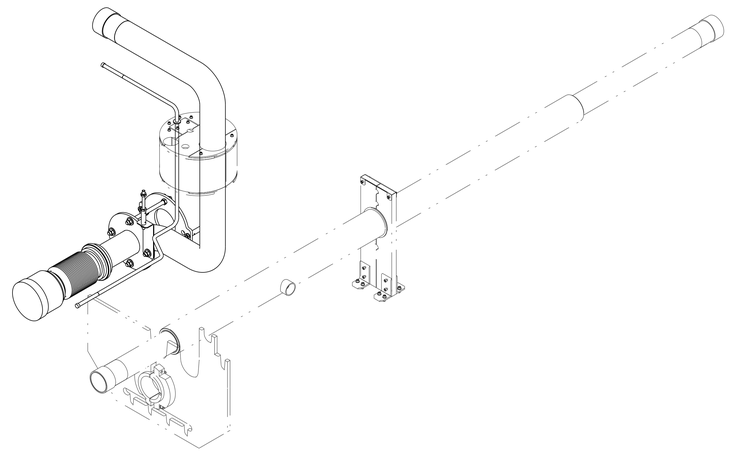

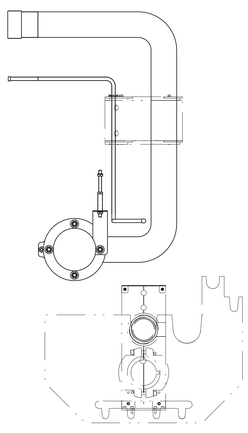

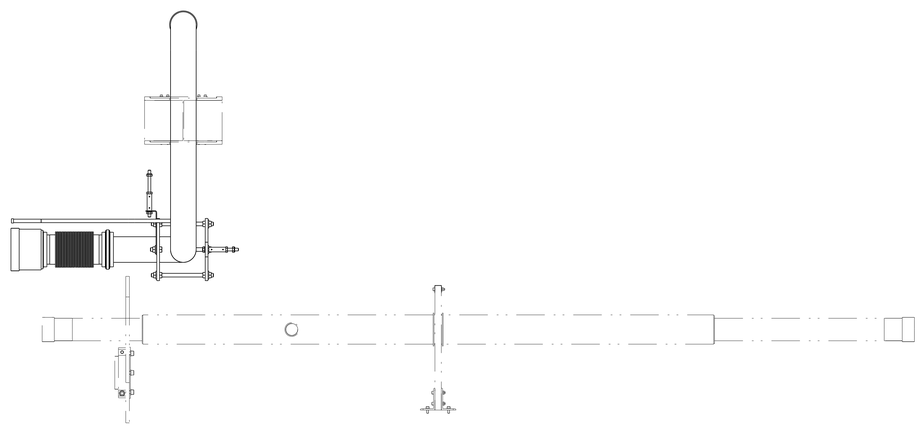

THIRD ANGLE PROJECTION

ERNEST ORLANDO LAWRENCE
BERKELEY NATIONAL LABORATORY
UNIVERSITY OF CALIFORNIA - BERKELEY

LHC IR FEEDBOX
CRYOGENICS
PIPING DFBXB IP1, RIGHT 24C350

MICROFILMED:	DWG. TYPE	SHOWN ON	SCALE: 0.125	DO NOT SCALE PRINTS
	ASSEM	-	SHEET 9 OF 11	
PATENT CLEAR:	DESIGN ACCT. NO.	CATEGORY CODE	DWG. NO.	SIZE / REV.
	Z5LCE2	LH2001	2518716	A

DWG. NO. 2518716 SIZE/REV. A 9

BEAM TUBE

SHOWN FOR REFERENCE ONLY

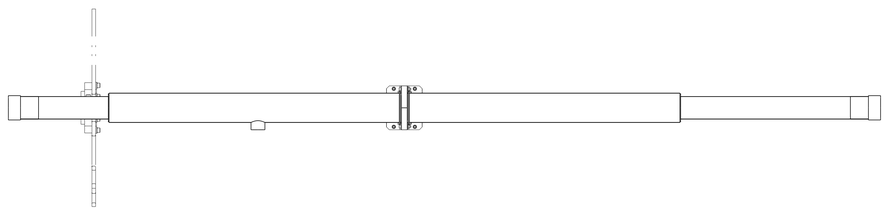

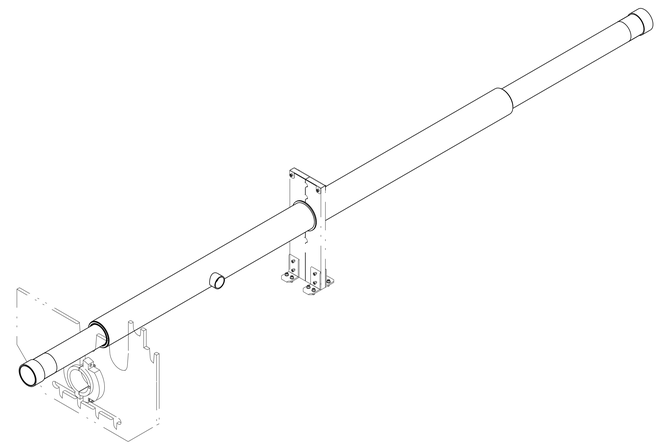

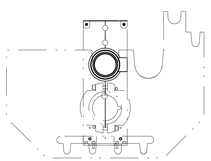

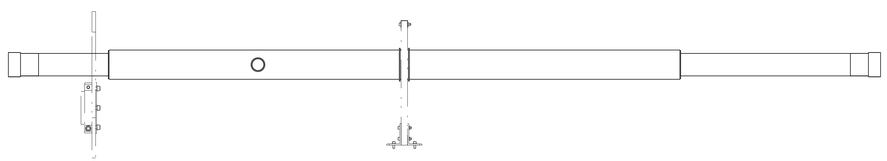

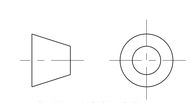

THIRD ANGLE PROJECTION

ERNEST ORLANDO LAWRENCE
BERKELEY NATIONAL LABORATORY
UNIVERSITY OF CALIFORNIA - BERKELEY

LHC IR FEEDBOX
CRYOGENICS
PIPING DFBXB IP1, RIGHT 24C350

MICROFILMED:	DWG. TYPE	SHOWN ON	SCALE: 0.125	DO NOT SCALE PRINTS
	ASSEM	.	SHEET 10 OF 11	
PATENT CLEAR:	DESIGN ACCT. NO.	CATEGORY CODE	DWG. NO.	SIZE / REV.
	Z5LCE2	LH2001	2518716	A

DWG. NO. 2518716 SIZE A REV. 10

BUS DUCT ASSEMBLY

SHOWN FOR REFERENCE ONLY

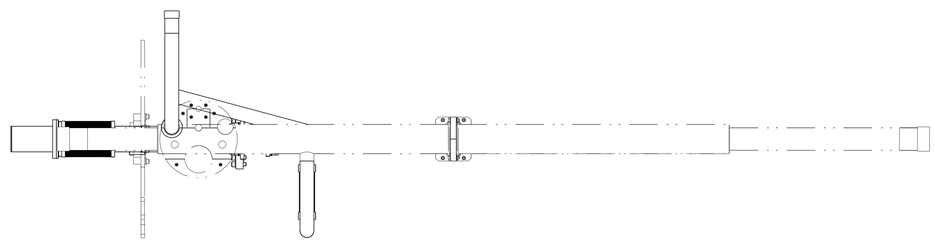

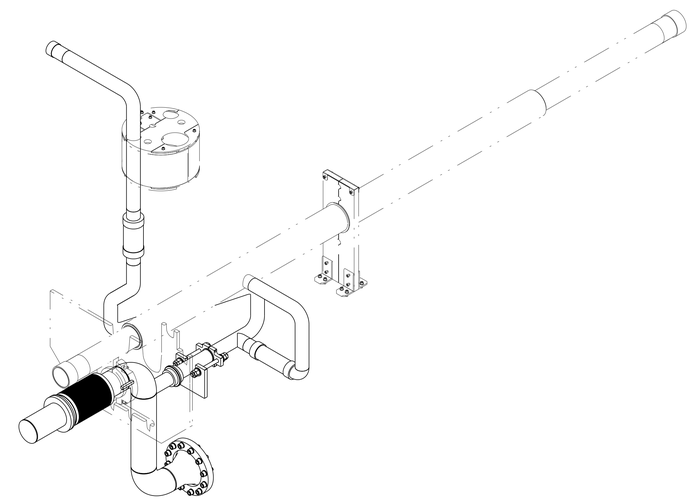

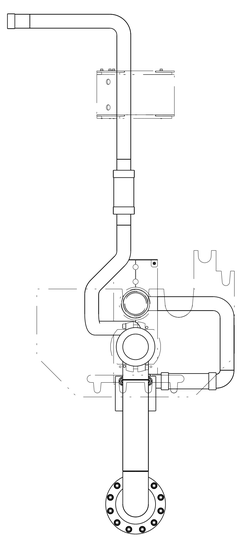

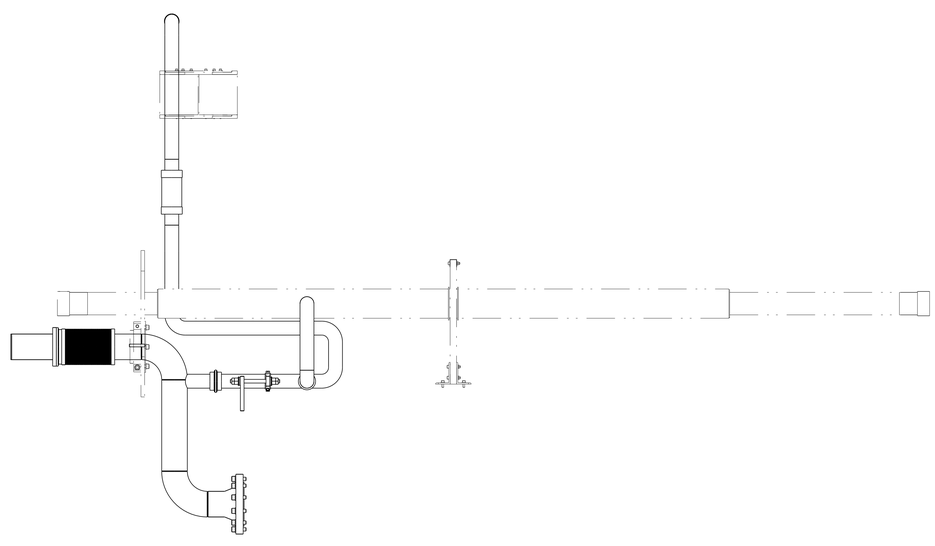

THIRD ANGLE PROJECTION

ERNEST ORLANDO LAWRENCE
BERKELEY NATIONAL LABORATORY
UNIVERSITY OF CALIFORNIA - BERKELEY

LHC IR FEEDBOX
CRYOGENICS
PIPING DFBXB IP1, RIGHT 24C350

MICROFILMED:	DWG. TYPE	SHOWN ON	SCALE: 0.125	DO NOT SCALE PRINTS
	ASSEM	-	SHEET 11 OF 11	
PATENT CLEAR:	DESIGN ACCT. NO.	CATEGORY CODE	DWG. NO.	SIZE / REV.
	Z5LCE2	LH2001	2518716	A

DWG. NO. 2518716 SIZE/REV. A SH. 11