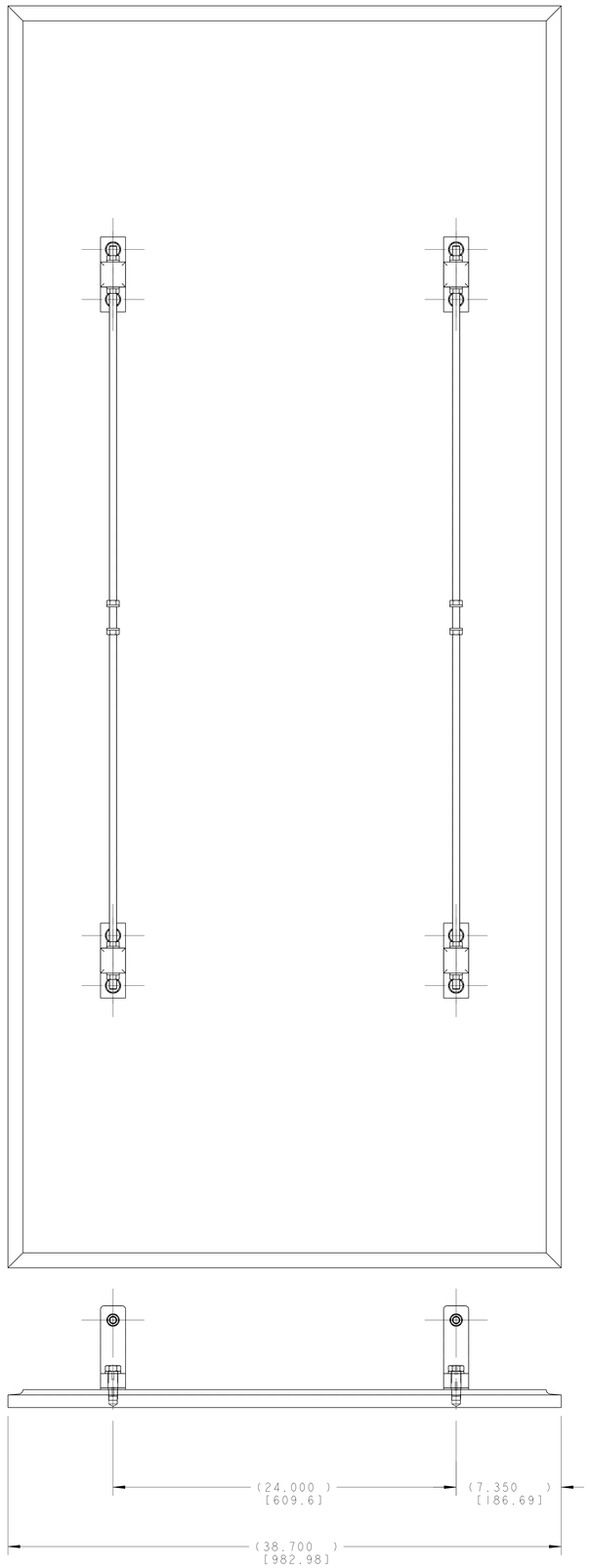

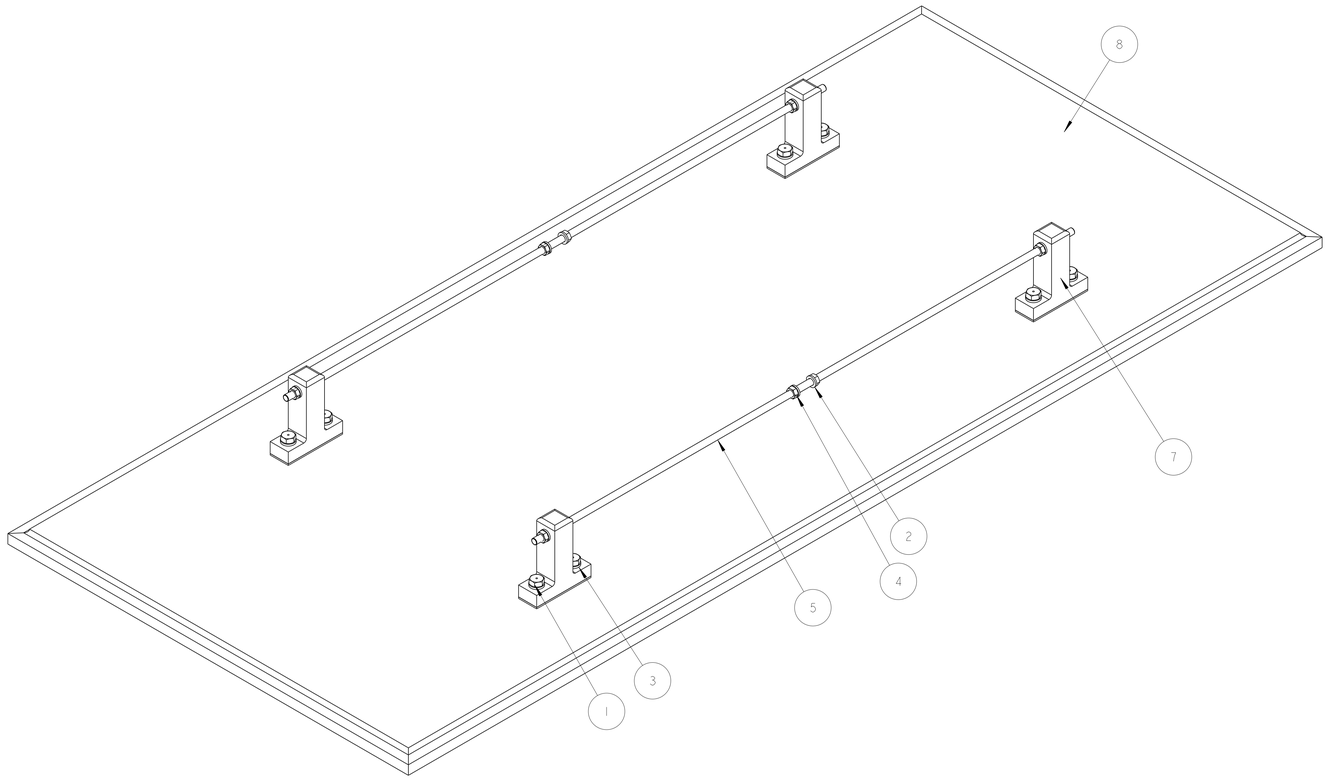

SCALE 1/4

NOTES: (UNLESS OTHERWISE SPECIFIED)

1. THIS IS A CRYOGENIC VACUUM COMPONENT.
2. CLEANING PROCEDURE : PER VENDOR SPECIFICATION WITH LBNL APPROVAL.
3. PACKAGING AND STORAGE PROCEDURE OF THE COMPONENTS: PER VENDOR SPECIFICATION WITH LBNL APPROVAL.
4. DIMENSIONS AND TOLERANCING PER ANSI Y14.5M-1982. UNITS ARE IN INCHES [mm] UNLESS OTHERWISE SPECIFIED.
5. USE OF SULFUR OR SILICONE BEARING OILS, LUBRICANTS, OR COOLANTS ARE STRICTLY PROHIBITED.
6. USE OF RESIN OR RUBBER BONDED ABRASIVES UNDER POWER IS STRICTLY PROHIBITED. USE VITREOUS BONDED ABRASIVES ONLY.
7. ESTIMATED WEIGHT: 1,196 lbs.

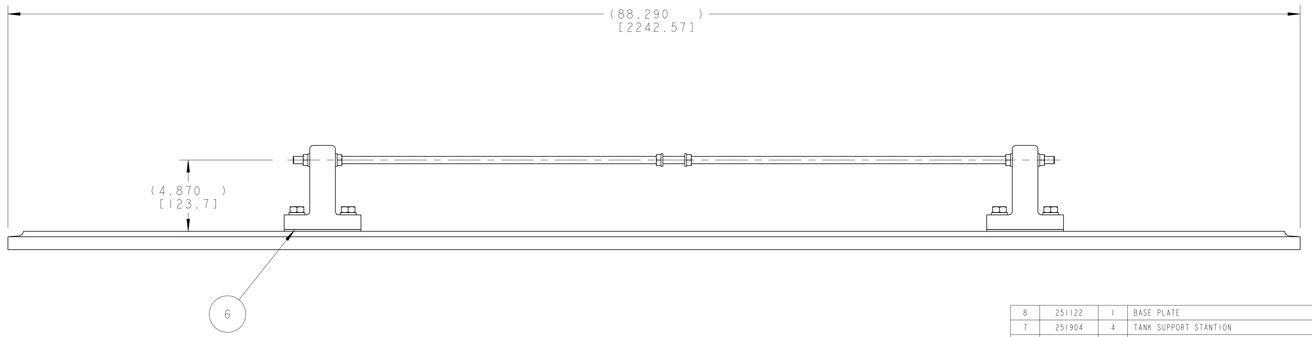

ITEM	PART NO	REQD	DESCRIPTION	MATERIAL
8	251122	1	BASE PLATE	SS 304L
7	251904	4	TANK SUPPORT STANTION	SS 304L
6	251596	4	TANK SUPPORT SHIM	NEMA-G10
5	251901	2	TANK SUPPORT ROD	INVAR
4	-	12	1/2" HEX NUT	18-8SS
3	-	8	5/8" WASHER	18-8SS
2	-	12	1/2" WASHER	18-8SS
1	-	8	M16 x1 X 45mm LG. HX HD CAP SCREW	18-8SS

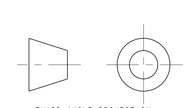

THIRD ANGLE PROJECTION

REV	DWG	CHK	ZONE	DATE	CHANGES
B	ARH	SPV		01/27/03	REVISED BOM MATERIAL FOR ITEMS 1, 2, 3 & 4
A	ARH	DPO		09-14-02	INITIAL RELEASE

UNLESS OTHERWISE SPECIFIED

TOLERANCES		
	X.X ± 0.1	FRAC. ± 1/64
	X.XX ± 0.03	Angles ± 1.00°
	X.XXX ± 0.010	FINISH 125/

DO NOT SCALE PRINT

THREADS ARE CLASS 2
CHAMFER ENDS OF ALL SCREW TREADS 30°
CUT ROUND, 1.5 THREAD RELIEF ON MACHINED THREADS
BREAK EDGES .016 MAX. ON MACHINED WORK
REMOVE BURRS, WELD SPLATTER & LOOSE SCALE
IN ACCORDANCE WITH ASME Y14.5M & B46.1

SHOP ORDERS

ACCT NO.	NO. REQD	SER NO.	-
		DATE ISSD	-
DEL TO		DATE REQD	-
SURFACE TREATMT	-		
IDENT METHOD	TAG		
PROJECT NUMBER	N/A		
PROJECT NAME	N/A		
DWG BY	M. KNOLLS	DATE	02-Apr-02
CHK BY	OSHATZ	DATE	14-Sep-02
APR BY	OSHATZ	DATE	14-Sep-02

ERNEST ORLANDO LAWRENCE BERKELEY NATIONAL LABORATORY
UNIVERSITY OF CALIFORNIA - BERKELEY

LHC IR FEEDBOX
VACUUM
BASE PLATE ASSY

MICROFILMED:	DWG. TYPE ASSEM	SHOWN ON	SCALE: 1/4 — DO NOT SCALE PRINTS
PATENT CLEAR:	DESIGN ACCT. NO. Z5LCE3	CATEGORY CODE LH2002	SHEET 1 OF 1 — DWG. NO. 2518586 — SIZE B — REV. B

DWG. NO. 2518586 SIZE B REV. B SH. 1