DESCRIPTION	MATERIAL	MAT. LOCATION
6" DIAM. NOM. CONFLAT	MDC #110026 304SS	-

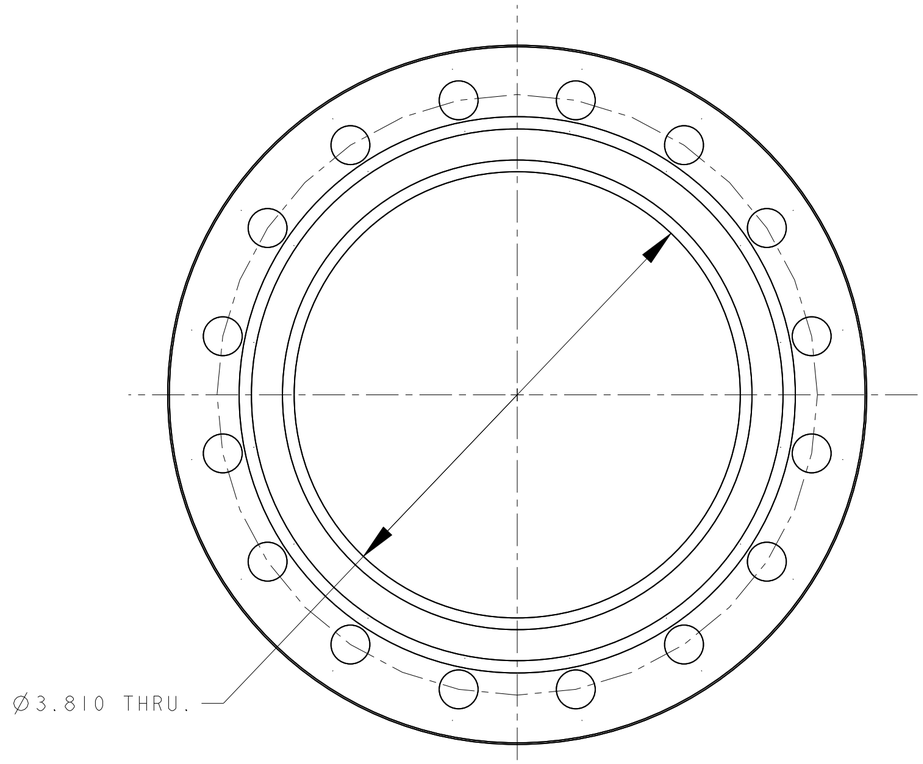

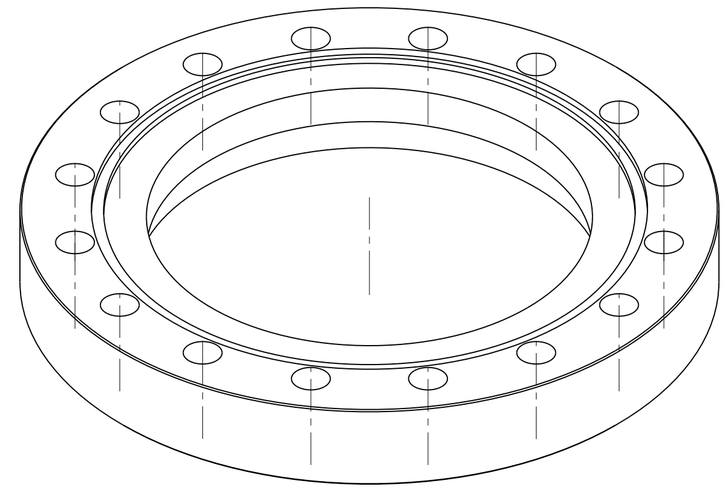

SCALE 1/1

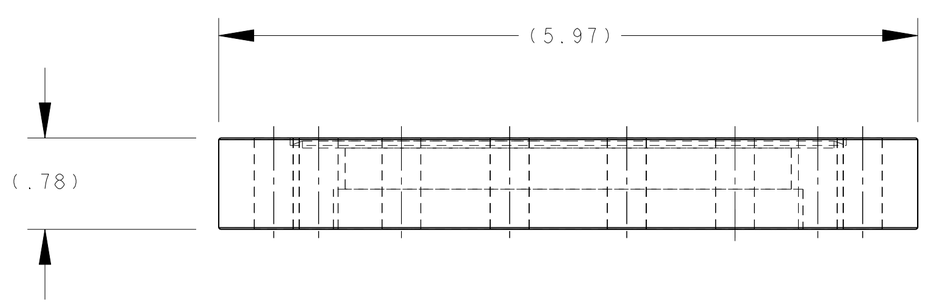

NOTES: UNLESS OTHERWISE SPECIFIED,

1.) PURCHASE PART; DRAWING FOR REFERENCE ONLY.

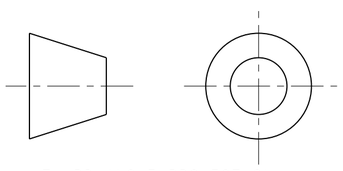

THIRD ANGLE PROJECTION

REV	DWG	CHK	ZONE	DATE	CHANGES
A	MJK	DPO		9/11/02	INITIAL RELEASE

UNLESS OTHERWISE SPECIFIED

TOLERANCES		
	X.X ± 0.1	FRAC. ± 1/64
	X.XX ± 0.03	Angles ± 1.00°
	X.XXX ± 0.010	FINISH 125 √(µin)

DO NOT SCALE PRINT

THREADS ARE CLASS 2

CHAMFER ENDS OF ALL SCREW TREADS 30°

CUT ROUND, 1.5 THREAD RELIEF ON MACHINED THREADS

BREAK EDGES .016 MAX. ON MACHINED WORK

REMOVE BURRS, WELD SPLATTER & LOOSE SCALE

IN ACCORDANCE WITH ASME Y14.5M & B46.1

SHOP ORDERS

SER NO.	-		
ACCT NO.		NO. REQD	DATE ISSD -
DEL TO			DATE REQD -
SURFACE TREATMT	-		
IDENT METHOD	TAG		
PROJECT NUMBER	N/A		
PROJECT NAME	N/A		
DWG BY	KNOLLS		DATE 5/31/01
CHK BY	Jon Zbasnik		DATE 4/2/02
APR BY	Jon Zbasnik		DATE 4/2/02

ERNEST ORLANDO LAWRENCE
BERKELEY NATIONAL LABORATORY
UNIVERSITY OF CALIFORNIA - BERKELEY

LHC IR FEEDBOX
VACUUM
TRANSDUCER, BUCKET FLANGE

MICROFILMED:	DWG. TYPE	SHOWN ON	SCALE: 1/1	DO NOT SCALE PRINTS
	PART	2518463	SHEET 1 OF 1	
PATENT CLEAR:	DESIGN ACCT. NO.	CATEGORY CODE	DWG. NO.	SIZE / REV.
	Z5LCE2	LHC2002	2518443	A

Dwg. File: 25184 Model File: 2518443.TRNSDCR_BUCKET_FLANGE

Rev. 1/29/2000 J. Odwyer

DWG. NO. 2518443 SIZE A REV. SH. 1