DWG. NO.	SIZE	REV.	SH.
2518422	A	1	

DESCRIPTION	MATERIAL	MAT. LOCATION
TUBE 4 1/4" O.D. X .049 WALL PER ASTM A269	304L SS	-

NOTES: UNLESS OTHERWISE SPECIFIED,

1. DIMENSIONS AND TOLERANCING PER ANSI Y14.5M-1982 UNITS ARE IN INCHES UNLESS OTHERWISE SPECIFIED.
2. USE OF SULFUR OR SILICONE BEARING OILS, LUBRICANTS, OR COOLANTS ARE STRICTLY PROHIBITED
3. USE OF RESIN OR RUBBER BONDED ADRASIVES UNDER POWER IS STRICTLY PROHIBITED. USE VITREOUS BONDED ABRASIVES ONLY.
4. CLEAN AFTER MACHINING PER VENDOR SPECIFICATION; SUBJECT TO LBNL APPROVAL.
5. VENDOR SUGGESTED CHANGES TO WELD PREPS; SUBJECT TO LBNL APPROVAL.
6. PROTECT FINISHED PART BY BAGGING OR SIMILAR METHOD TO PROTECT AND MAINTAIN CLEANLINESS DURING SHIPMENT AND STORAGE.

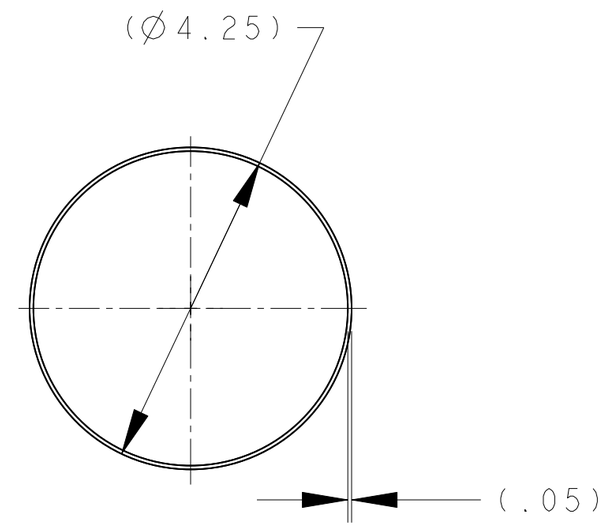

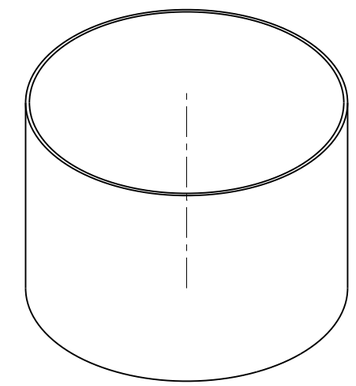

SCALE 1/2

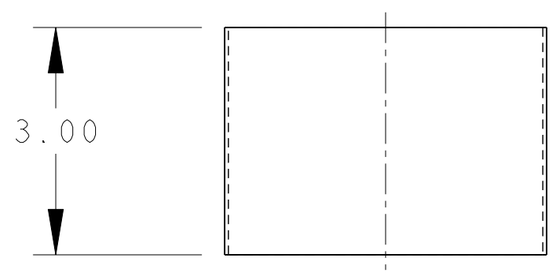

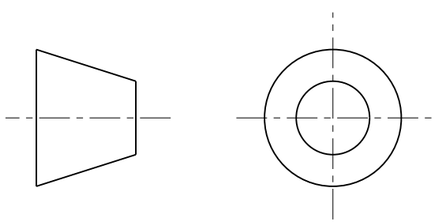

THIRD ANGLE PROJECTION

REV	DWG	CHK	ZONE	DATE	CHANGES
A	MJK	DPO		9/19/02	INITIAL RELEASE

UNLESS OTHERWISE SPECIFIED

TOLERANCES		
	X.X ± 0.1	FRAC. ± 1/64
	X.XX ± 0.03	Angles ± 1.00°
	X.XXX ± 0.010	FINISH 125 √(μin)

DO NOT SCALE PRINT

THREADS ARE CLASS 2
CHAMFER ENDS OF ALL SCREW TREADS 30°
CUT ROUND, 1.5 THREAD RELIEF ON MACHINED THREADS
BREAK EDGES .016 MAX. ON MACHINED WORK
REMOVE BURRS, WELD SPLATTER & LOOSE SCALE
IN ACCORDANCE WITH ASME Y14.5M & B46.1

SHOP ORDERS

SER NO.	-		
ACCT NO.		NO. REQD	DATE ISSD -
DEL TO			DATE REQD -
SURFACE TREATMT	-		
IDENT METHOD	TAG		
PROJECT NUMBER	N/A		
PROJECT NAME	N/A		
DWG BY	KNOLLS		DATE 31-May-01
CHK BY	Jon Zbasnik		DATE 9/19/02
APR BY	Jon Zbasnik		DATE 9/19/02

ERNEST ORLANDO LAWRENCE BERKELEY NATIONAL LABORATORY
UNIVERSITY OF CALIFORNIA - BERKELEY

LHC IR FEEDBOX
VACUUM
TUBE, 4.25 X 3" LONG

MICROFILMED:	DWG. TYPE	SHOWN ON	SCALE: 1/2	DO NOT SCALE PRINTS
	PART	251137	SHEET 1 OF 1	
PATENT CLEAR:	DESIGN ACCT. NO.	CATEGORY CODE	DWG. NO.	SIZE / REV.
	Z5LCE2	LHC2002	2518422	A

Dwg. File: 251842 Model File: 251842

Rev. 1/29/2000 J. R. Osborn