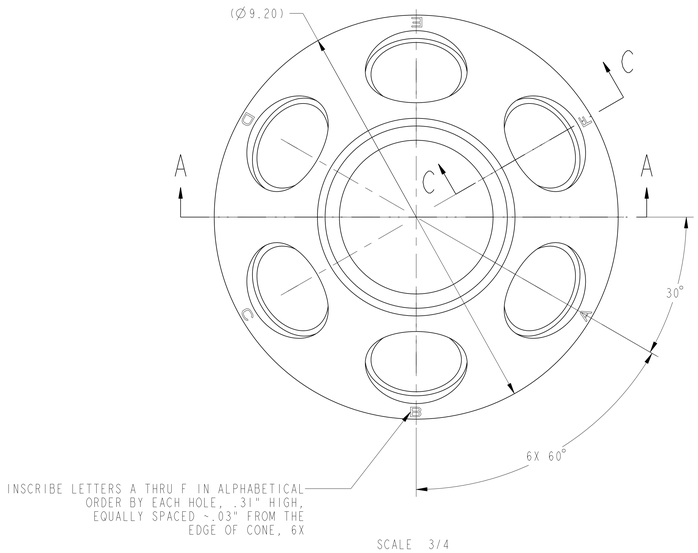

SCALE 3/4

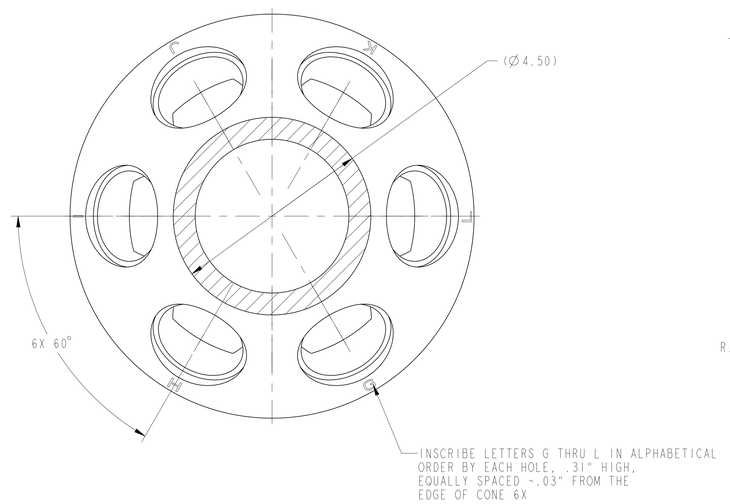

SECTION B-B
SCALE 3/4

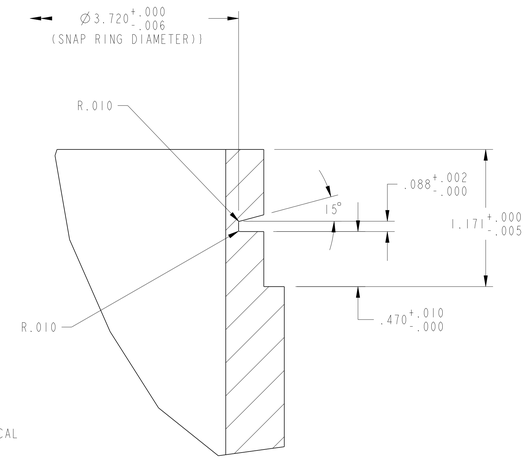

DETAIL: SNAP RING
SCALE: 2:1

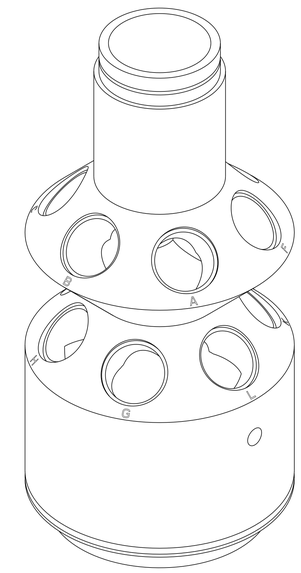

SCALE: HALF

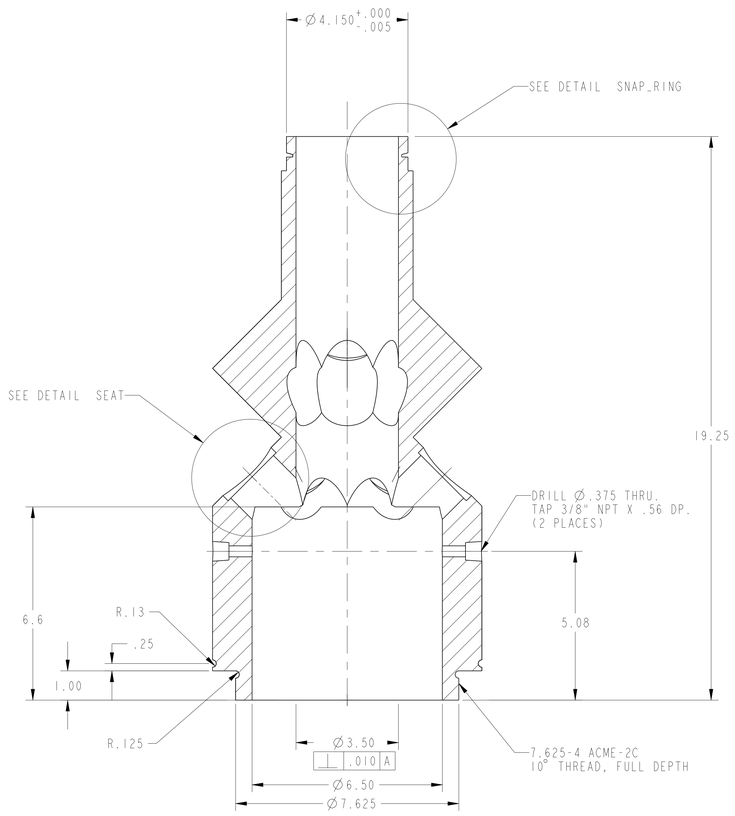

SECTION: A-A

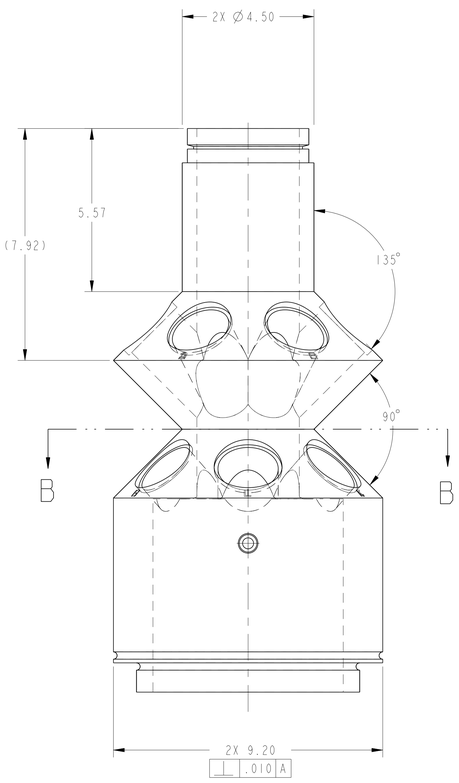

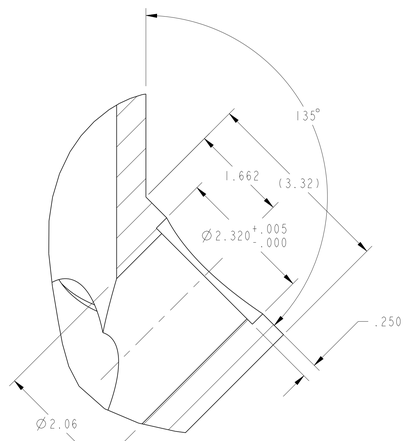

6X
SECTION C-C
SCALE 1/1

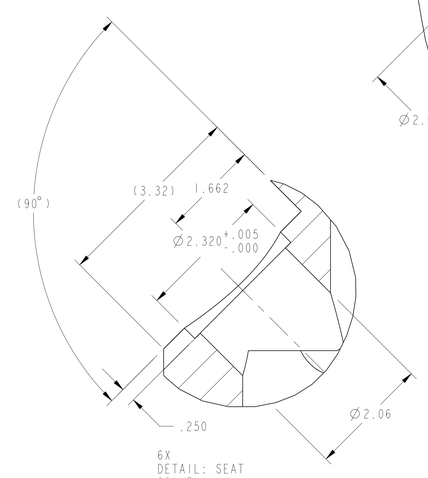

6X
DETAIL: SEAT
SCALE: 1:1

NOTES: UNLESS OTHERWISE SPECIFIED,

1. DIMENSIONS AND TOLERANCING PER ANSI Y14.5M-1982 UNITS ARE IN INCHES UNLESS OTHERWISE SPECIFIED.
2. USE OF SULFUR OR SILICONE BEARING OILS, LUBRICANTS, OR COOLANTS ARE STRICTLY PROHIBITED
3. USE OF RESIN OR RUBBER BONDED ADRASIVES UNDER POWER IS STRICTLY PROHIBITED. USE VITREOUS BONDED ABRASIVES ONLY.
4. CLEAN AFTER MACHINING PER VENDOR SPECIFICATION; SUBJECT TO LBNL APPROVAL.
5. PROTECT FINISHED PART BY BAGGING OR SIMILAR METHOD TO PROTECT AND MAINTAIN CLEANLINESS DURING SHIPMENT AND STORAGE.
6. ESTIMATED WEIGHT = 142 LBS

THIRD ANGLE PROJECTION

REV	DWG	CHK	ZONE	DATE	CHANGES
B	JDR	DPO		11-11-02	ADD C'BORE 6.50
A	RLM	DPO		10-4-02	INITIAL RELEASE

UNLESS OTHERWISE SPECIFIED
TOLERANCES: X.X ± 0.1 FRAC. ± 1/64; X.XX ± 0.01 Angles ± 1.00°; X.XXX ± 0.005 FINISH 125 μin
DO NOT SCALE PRINT
THREADS ARE CLASS 2
CHAMFER ENDS OF ALL SCREW THREADS 30°
CUT ROUND, 1.5 THREAD RELIEF ON MACHINED THREADS
BREAK EDGES .016 MAX. ON MACHINED WORK
REMOVE BURRS, WELD SPLATTER & LOOSE SCALE
IN ACCORDANCE WITH ASME Y14.5M & BAG-1

SHOP ORDERS
ACCT. NO. / NO. REQD / DATE ISSD
SEL. / DATE REQD
SURFACE TREATMT.
IDENT METHOD TAG
PROJECT NUMBER N/A
PROJECT NAME N/A
DWG BY KNOLLS DATE 15-Aug-01
CHK BY Jon Zbasnik DATE 21-Apr-02
APR BY Jon Zbasnik DATE 21-Apr-02

DESCRIPTION	MATERIAL	MAT. LOCATION
10" ROUND BAR	304L SS	-

ERNEST ORLANDO LAWRENCE BERKELEY NATIONAL LABORATORY
UNIVERSITY OF CALIFORNIA - BERKELEY

LHC IR FEEDBOX
ELECTRICAL
PORCUPINE

MICROFILMED:	DWG. TYPE	SHOWN ON	SCALE: 1/2	DO NOT SCALE PRINTS
	PART	2518314	SHEET 1 OF 1	
PATENT CLEAR:	DESIGN ACCT. NO.	CATEGORY CODE	DWG. NO.	SIZE / REV
	Z5LCE2	LH2004	2518376	B

DWG. NO. 2518376 SIZE B REV 1