DWG. NO.	SIZE	REV.	SH.
2518314	B	1	

ITEM	PART NO	REQD	DESCRIPTION	MATERIAL
7	251837	1	PORCUPINE	304L SS
6	251839	1	CONNECTOR TOP ASSY	304L SS
5	251833	1	BASE	304L SS
4	-	2	SS-8-VCR-1-6 CAJON MALE CONNECT	-
3	251838	1	COUPLING DISC ASSY	-
2	251835	12	CERAMASEAL SEAT ASSY	-
1	-	1	5102-400 TRUARC SERIES	-

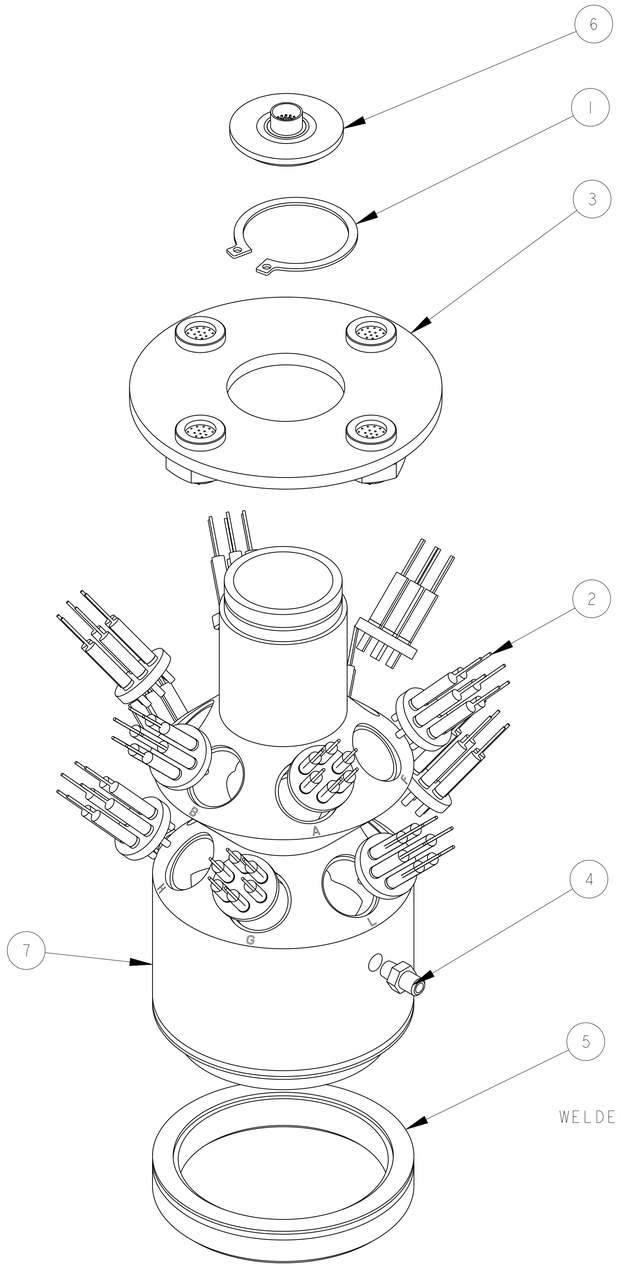

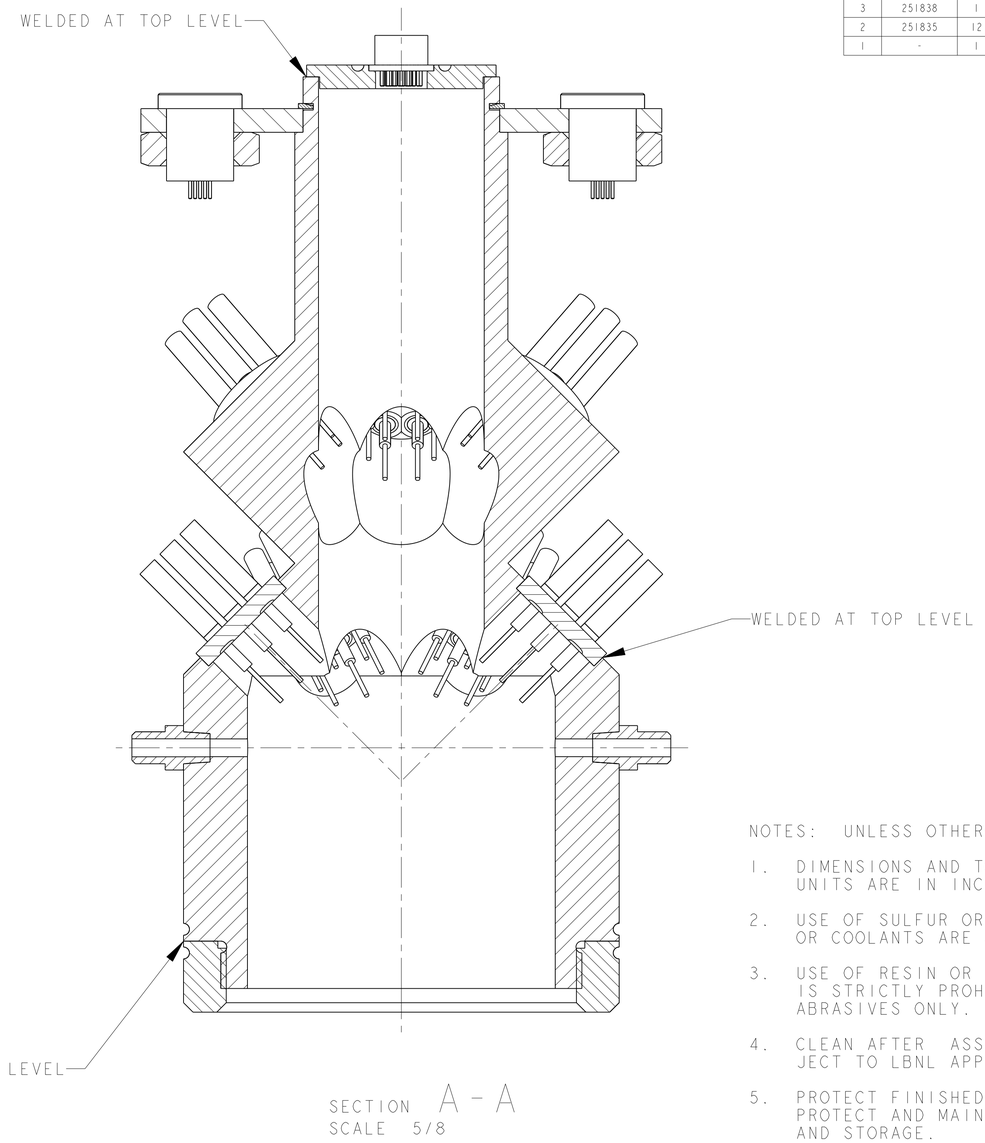

SECTION A - A
SCALE 5/8

NOTES: UNLESS OTHERWISE SPECIFIED,

1. DIMENSIONS AND TOLERANCING PER ANSI Y14.5M-1982 UNITS ARE IN INCHES UNLESS OTHERWISE SPECIFIED.
2. USE OF SULFUR OR SILICONE BEARING OILS, LUBRICANTS, OR COOLANTS ARE STRICTLY PROHIBITED
3. USE OF RESIN OR RUBBER BONDED ADRASIVES UNDER POWER IS STRICTLY PROHIBITED. USE VITREOUS BONDED ABRASIVES ONLY.
4. CLEAN AFTER ASSEMBLY PER VENDOR SPECIFICATION; SUBJECT TO LBNL APPROVAL.
5. PROTECT FINISHED PART BY BAGGING OR SIMILAR METHOD TO PROTECT AND MAINTAIN CLEANLINESS DURING SHIPMENT AND STORAGE.
6. ESTIMATED WEIGHT = 180 LBS

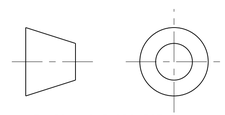

THIRD ANGLE PROJECTION

REV	DWG	CHK	ZONE	DATE	CHANGES
B	JDR	DPO		11-11-02	UPDATE GRAPHICS FOR NEW C´BORE
A	RLM	DPO		10-4-02	INITIAL RELEASE

UNLESS OTHERWISE SPECIFIED

TOLERANCES: X.X ± 0.1; FRAC. ± 1/64; X.XX ± 0.01; Angles ± 1.00°; X.XXX ± 0.005; FINISH 125 √μin

DO NOT SCALE PRINT

THREADS ARE CLASS 2
CHAMFER ENDS OF ALL SCREW TREADS 30°
CUT ROUND, 1.5 THREAD RELIEF ON MACHINED THREADS
BREAK EDGES .016 MAX. ON MACHINED WORK
REMOVE BURRS, WELD SPLATTER & LOOSE SCALE
IN ACCORDANCE WITH ASME Y14.5M & B46.1

SHOP ORDERS

ACCT NO.: NO. REQD:
DEL TO:
SURFACE TREATMT: -
IDENT METHOD: TAG
PROJECT NUMBER: N/A
PROJECT NAME: N/A
DWG BY: M. KNOLLS — DATE: 29-Nov-01
CHK BY: Jon Zbasnik — DATE: 21-Apr-02
APR BY: Jon Zbasnik — DATE: 21-Apr-02

SER NO.: -
DATE ISSD: -
DATE REQD: -

ERNEST ORLANDO LAWRENCE BERKELEY NATIONAL LABORATORY
UNIVERSITY OF CALIFORNIA - BERKELEY

LHC IR FEEDBOX
ELECTRICAL
LQX DIAGONSTIC ASSEMBLY

MICROFILMED:	DWG. TYPE	SHOWN ON	SCALE: 3/8	DO NOT SCALE PRINTS
	ASSEM	-	SHEET 1 OF 1	
PATENT CLEAR:	DESIGN ACCT. NO.	CATEGORY CODE	DWG. NO.	SIZE / REV.
	Z5LCE2	LH2004	2518314	B