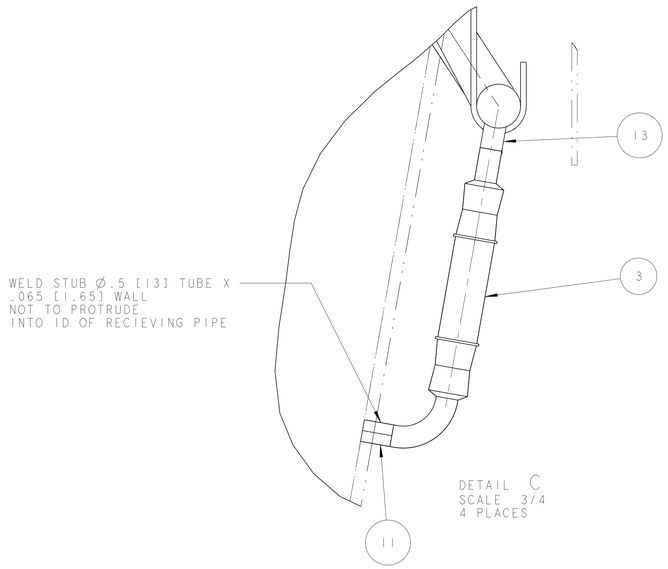

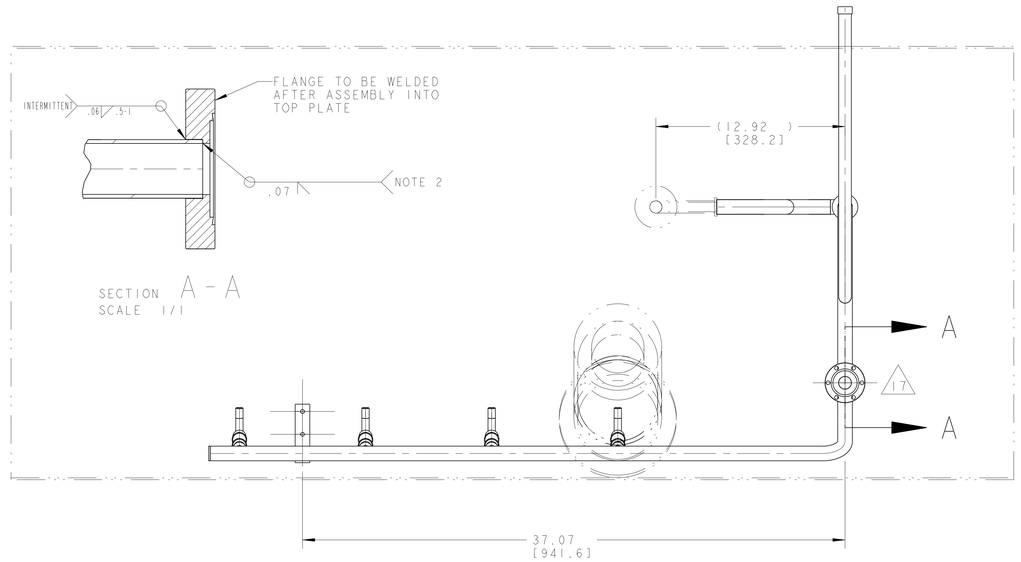

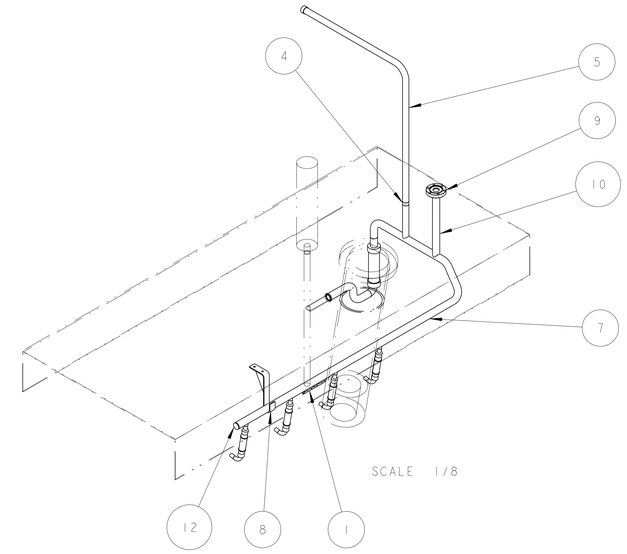

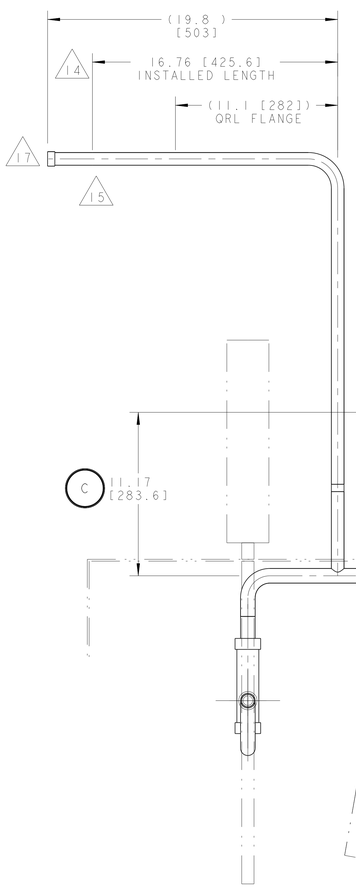

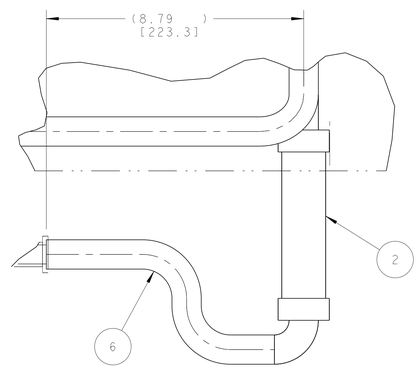

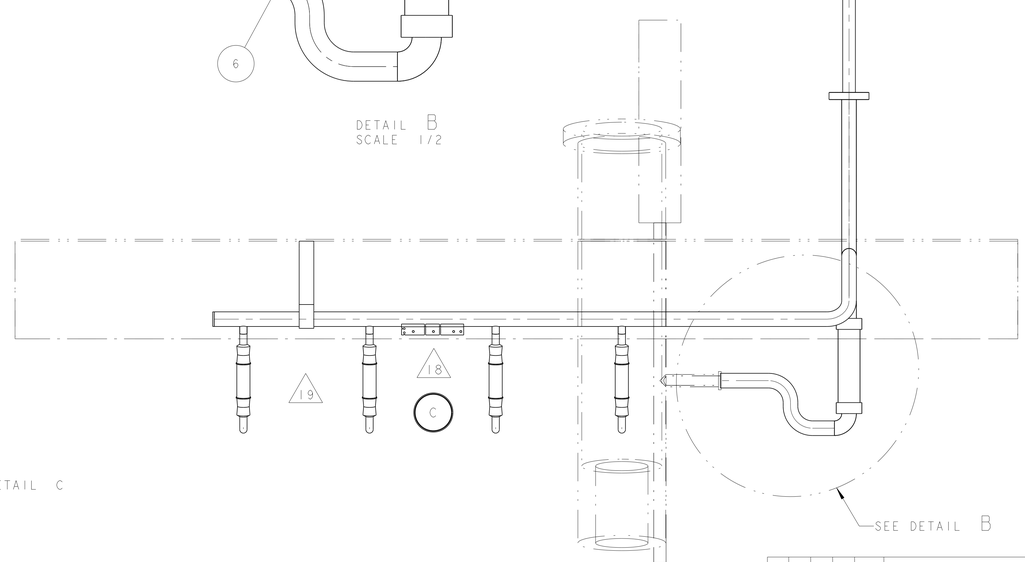

NOTES: (UNLESS OTHERWISE SPECIFIED)

1. THIS IS A CRYOGENIC VACUUM COMPONENT.
2. WELDING PROCEDURE: PER VENDOR SPECIFICATION WITH LBNL APPROVAL.
3. CLEANING PROCEDURE : PER VENDOR SPECIFICATION WITH LBNL APPROVAL.
4. PACKAGING AND STORAGE PROCEDURE OF THE COMPONENTS: PER VENDOR SPECIFICATION WITH LBNL APPROVAL.
5. DIMENSIONS AND TOLERANCING PER ANSI Y14.5M-1982. UNITS ARE IN INCHES [mm] UNLESS OTHERWISE SPECIFIED.
6. USE OF SULFUR OR SILICONE BEARING OILS, LUBRICANTS, OR COOLANTS ARE STRICTLY PROHIBITED.
7. USE OF RESIN OR RUBBER BONDED ABRASIVES UNDER POWER IS STRICTLY PROHIBITED. USE VITREOUS BONDED ABRASIVES ONLY.
8. VENDOR SUGGESTED CHANGES TO WELD PREPS; SUBJECT TO LBNL APPROVAL.
9. FITTINGS MAY BE USED IN PLACE OF BENDS; SUBJECT TO LBNL APPROVAL.
10. VENDOR SUGGESTED CHANGES TO TOLERANCES TO FACILITATE FABRICATION OR ASSEMBLY; SUBECT TO LBNL APPROVAL.
11. REMOVE ALL THE BURRS AND REAM THE ENDS FOR CIRCULARITY AND CLEAN ENDS.
12. TUBE END SURFACE MUST BE PERPENDICULAR TO THE TUBE AXIS WITHIN +/-.010.
13. PERFORM ACCEPTANCE TESTS PER LBNL SPECIFICATION M989. (B)
14. A MARK DESIGNATING THE INSTALLED LENGTH WILL BE UTILIZED DURING FINAL INSTALLATION OF THE FEEDBOX ASSEMBLY. MARK, SCRIBE OR ETCH THIS LOCATION IN A PERMANENT MANNER, SUBJECT TO LBNL APPROVAL, TO AN ACCURACY OF ±0.063".
15. PROVIDE A MINIMUM LENGTH OF 4.0" OF STRAIGHT, SMOOTH PIPE ON THE INDICATED SIDE OF THE INSTALLED LENGTH MARK FOR PIPE WELDING DURING FINAL INSTALLATION OF THE FEEDBOX ASSEMBLY.
16. PIPE MUST BE STRAIGHT AND SMOOTH (NO BUMPS) FOR 1.5" ON EITHER SIDE OF THE CENTER-PLANE OF THE SUPPORT. (B)
17. CAP BOTH ENDS OF PIPE TO FACILITATE ACCEPTANCE TESTS. (B)
18. INSTALL TEMPERATURE SENSOR PER LHC SPECIFICATION LHC-QIT-AP-0002. (C) SENSOR TO BE PROVIDED BY LBNL.
19. ALL PIPES TO BE INSULATED PER MLI SPECIFICATION PROVIDED BY VENDOR AND SUBJECT TO LBNL APPROVAL. IN LOCATIONS WHERE PIPES PASS THROUGH SUPPORT ASSEMBLIES, INSULATION IS TO BE WRAPPED WITH KAPTON TAPE FOR PROTECTION FROM ABRASION DURING THERMAL CYCLING.

ITEM	PART NO	REQD	DESCRIPTION	MATERIAL
13	-	4	TUBE, PER ASTM A269	SS 304L
12	-	1	HTS MANIFOLD PIPE CAP	SS 304L
11	-	4	TUBE, PER ASTM A269	SS 304L
10	-	1	TUBE, PER ASTM A269	SS 304L
9	-	1	2-3/4 CONFLAT, MDC 110012	SS 304L
8	25M856	1	PIPE_HANGER	SS 304L
7	-	1	HTS MANIFOLD HEADER, SS TUBING	SS 304L
6	-	1	TUBE, PER ASTM A269	SS 304L
5	-	1	TUBE, PER ASTM A269	SS 304L
4	-	1	Ø5/16" X 1/16" FLAT PLATE ORIFICE	SS 304L
3	-	4	BRAIDED FLEX HOSE, 1/2"ID X 2.3"LL	SS 300 SERIES
2	-	1	BRAIDED FLEX HOSE, 3/4"ID X 5" LL	SS 300 SERIES
1	25M970	1	THERMOMETER MOUNTING PAD II	CDA 10100

REV	DWG	CHK	ZONE	DATE	CHANGES
C	RLM	JPZ		9/30/03	WELDMENT WAS MIRROR IMAGE YOKE HEIGHT CHANGE: 11.57 WAS 12.65 32.41 WAS 33.91; 10.96 WAS 12.46; 4.33 WAS 2.83 5.17 WAS 4.00; 2.78 WAS 1.25; 3.25 WAS 3.22; ADD BEND RADIUS; ADD TUBE LENGTH; R1.50 WAS R1.00 REMOVED TEMP SENSOR, ADDED THERMAL MOUNTING PAD REVISED DRAWING NOTE 18.
B	ARH	DPO		02/27/03	REVISED DRAWING NOTES 13, 16 & 17, UPDATED SUBASSEMBLY VIEWS
A	JDR	SPV		11/8/02	INITIAL RELEASE

THIRD ANGLE PROJECTION

UNLESS OTHERWISE SPECIFIED
TOLERANCES: X.X ± 0.1 FRAC. ± 1/64; X.XX ± 0.03 Angles ± 1.00°; X.XXX ± 0.010 FINISH 125√
DO NOT SCALE PRINT
THREADS ARE CLASS 2
CHAMFER ENDS OF ALL SCREW THREADS 30°
CUT ROUND, 1.5 THREAD RELIEF ON MACHINED THREADS
BREAK EDGES .016 MAX. ON MACHINED WORK
REMOVE BURRS, WELD SPLATTER & LOOSE SCALE
IN ACCORDANCE WITH ASME Y14.5M & B46.1

SHOP ORDERS
ACCT NO.: NO. REQD
REL TO:
SURFACE TREATMT:
IDENT METHOD: TAG
PROJECT NUMBER: N/A
PROJECT NAME: N/A
DWG BY: KNOLLS — DATE 12-Mar-02
CHK BY: S.VIROSTEK — DATE 8-NOV-02
APR BY: Jon Zbasnik — DATE 25-JUL-02
SER NO.:
DATE ISSD:
DATE REQD:

ERNEST ORLANDO LAWRENCE BERKELEY NATIONAL LABORATORY
UNIVERSITY OF CALIFORNIA - BERKELEY

LHC IR FEEDBOX
CRYOGENICS
DH VENT PIPE, DFBXF, IP5 RIGHT

MICROFILMED: | DWG. TYPE: ASSEM | SHOWN ON: . | SCALE: 1/4 | DO NOT SCALE PRINTS
SHEET 1 OF 2
PATENT CLEAR: | DESIGN ACCT. NO.: Z5LCE2 | CATEGORY CODE: LH2003 | DWG. NO.: 25I6376 | SIZE: C | REV: C

DWG. NO. 25I6376 SIZE C REV 1

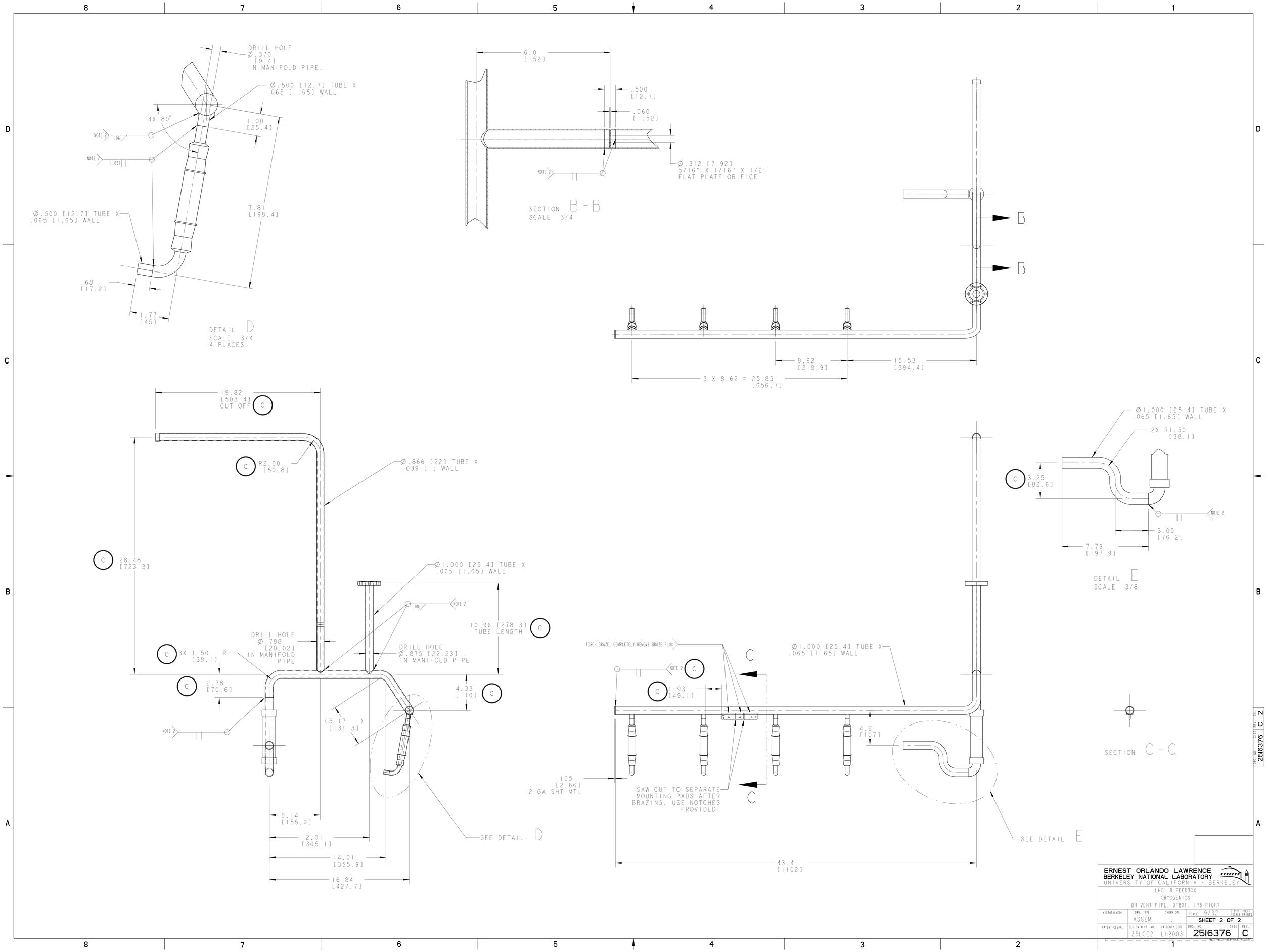

ERNEST ORLANDO LAWRENCE
BERKELEY NATIONAL LABORATORY
UNIVERSITY OF CALIFORNIA - BERKELEY

LHC IR FEEDBOX
CRYOGENICS
DH VENT PIPE, DFBXF, IP5 RIGHT

MICROFILMED:	DWG. TYPE	SHOWN ON	SCALE: 9/32	DO NOT SCALE PRINTS
	ASSEM		SHEET 2 OF 2	
PATENT CLEAR:	DESIGN ACCT. NO.	CATEGORY CODE	DWG. NO.	SIZE / REV.
	Z5LCE2	LH2003	2516376	C

DWG. NO. 2516376 SIZE C REV. 2