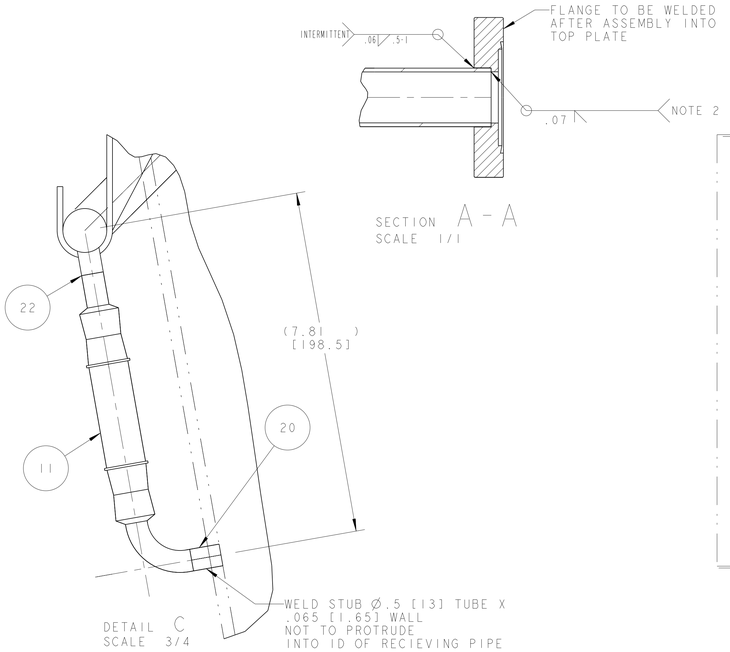

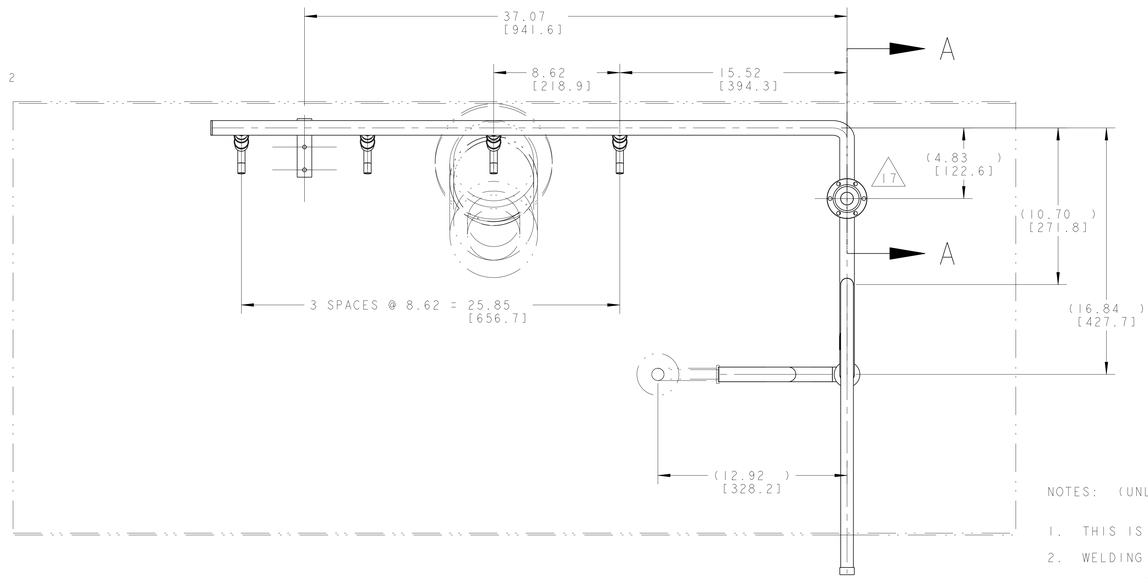

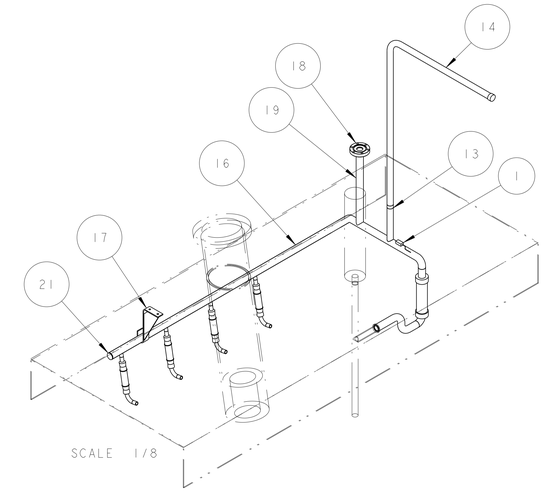

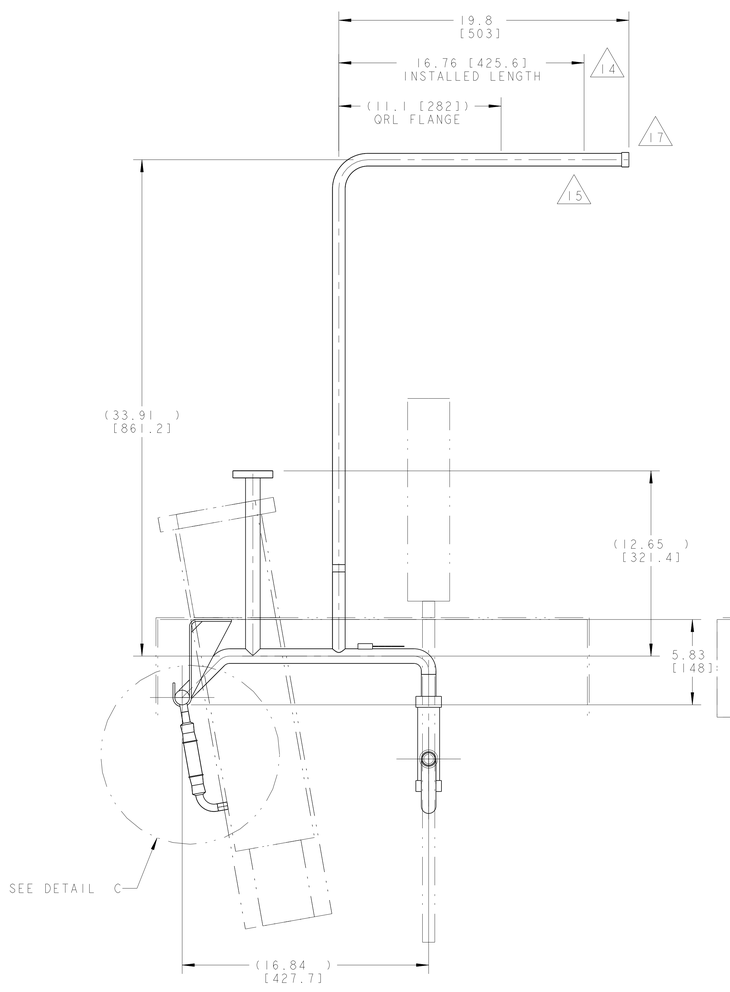

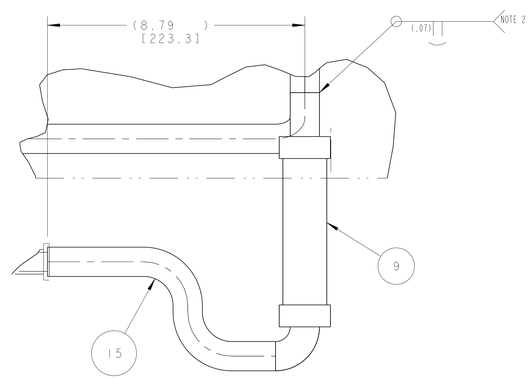

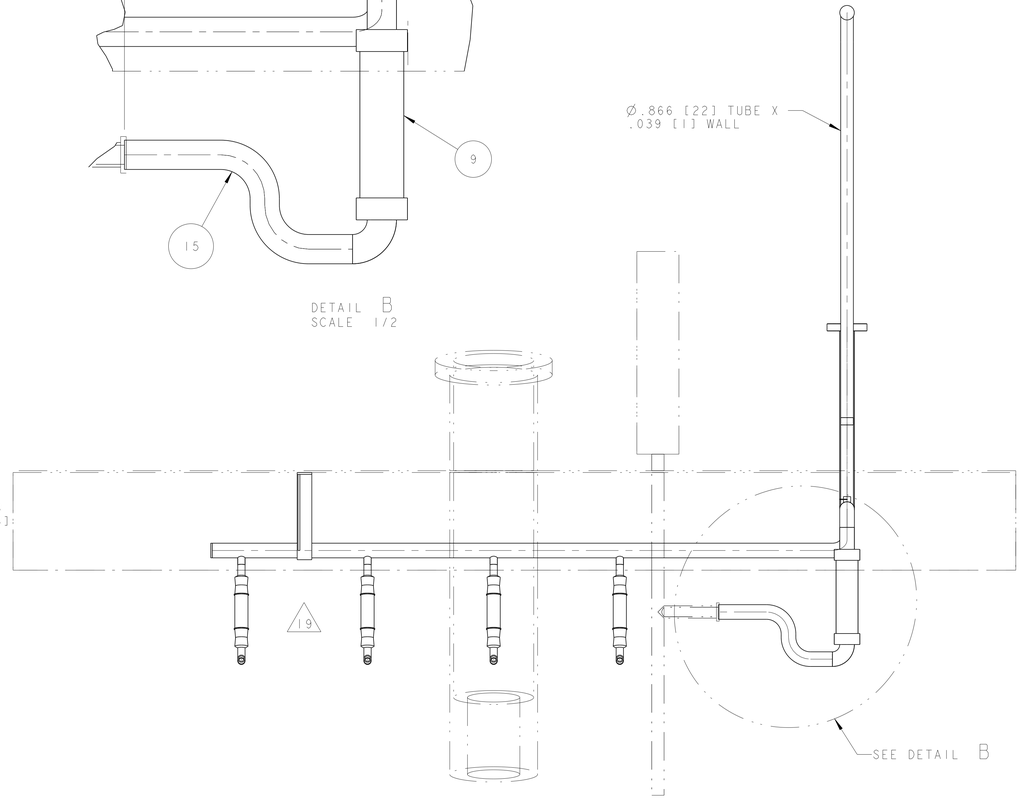

NOTES: (UNLESS OTHERWISE SPECIFIED)

1. THIS IS A CRYOGENIC VACUUM COMPONENT.
2. WELDING PROCEDURE: PER VENDOR SPECIFICATION WITH LBNL APPROVAL.
3. CLEANING PROCEDURE : PER VENDOR SPECIFICATION WITH LBNL APPROVAL.
4. PACKAGING AND STORAGE PROCEDURE OF THE COMPONENTS: PER VENDOR SPECIFICATION WITH LBNL APPROVAL.
5. DIMENSIONS AND TOLERANCING PER ANSI Y14.5M-1982. UNITS ARE IN INCHES [mm] UNLESS OTHERWISE SPECIFIED.
6. USE OF SULFUR OR SILICONE BEARING OILS, LUBRICANTS, OR COOLANTS ARE STRICTLY PROHIBITED.
7. USE OF RESIN OR RUBBER BONDED ABRASIVES UNDER POWER IS STRICTLY PROHIBITED. USE VITREOUS BONDED ABRASIVES ONLY.
8. VENDOR SUGGESTED CHANGES TO WELD PREPS; SUBJECT TO LBNL APPROVAL.
9. FITTINGS MAY BE USED IN PLACE OF BENDS; SUBJECT TO LBNL APPROVAL.
10. VENDOR SUGGESTED CHANGES TO TOLERANCES TO FACILITATE FABRICATION OR ASSEMBLY; SUBECT TO LBNL APPROVAL.
11. REMOVE ALL THE BURRS AND REAM THE ENDS FOR CIRCULARITY AND CLEAN ENDS.
12. TUBE END SURFACE MUST BE PERPENDICULAR TO THE TUBE AXIS WITHIN +/-.010.
13. PERFORM ACCEPTANCE TESTS PER LBNL SPECIFICATION M989. B
14. A MARK DESIGNATING THE INSTALLED LENGTH WILL BE UTILIZED DURING FINAL INSTALLATION OF THE FEEDBOX ASSEMBLY. MARK, SCRIBE OR ETCH THIS LOCATION IN A PERMANENT MANNER, SUBJECT TO LBNL APPROVAL, TO AN ACCURACY OF ±0.063".
15. PROVIDE A MINIMUM LENGTH OF 4.0" OF STRAIGHT, SMOOTH PIPE ON THE INDICATED SIDE OF THE INSTALLED LENGTH MARK FOR PIPE WELDING DURING FINAL INSTALLATION OF THE FEEDBOX ASSEMBLY.
16. PIPE MUST BE STRAIGHT AND SMOOTH (NO BUMPS) FOR 1.5" ON EITHER SIDE OF THE CENTER-PLANE OF THE SUPPORT. B
17. CAP BOTH ENDS OF PIPE TO FACILITATE ACCEPTANCE TESTS. B
18. INSTALL TEMPERATURE SENSOR PER LHC SPECIFICATION LHC-QIT-ES-0002. SENSOR TO BE PROVIDED BY LBNL.
19. ALL PIPES TO BE INSULATED PER MLI SPECIFICATION PROVIDED BY VENDOR AND SUBJECT TO LBNL APPROVAL. IN LOCATIONS WHERE PIPES PASS THROUGH SUPPORT ASSEMBLIES, INSULATION IS TO BE WRAPPED WITH KAPTON TAPE FOR PROTECTION FROM ABRASION DURING THERMAL CYCLING.

ITEM	PART NO	REQD	DESCRIPTION	MATERIAL
22	-	4	TUBE, PER ASTM A269	SS 304L
21	-	1	HTS MANIFOLD PIPE CAP	SS 304L
20	-	4	TUBE, PER ASTM A269	SS 304L
19	-	1	TUBE, PER ASTM A269	SS 304L
18	-	1	2-3/4 CONFLAT, MDC 110012	SS 304L
17	25M856	1	PIPE_HANGER	SS 304L
16	-	1	HTS MANIFOLD HEADER, SS TUBING	SS 304L
15	-	1	TUBE, PER ASTM A269	SS 304L
14	-	1	TUBE, PER ASTM A269	SS 304L
13	-	1	Ø5/16" X 1/16" FLAT PLATE ORIFICE	SS 304L
11	-	4	BRAIDED FLEX HOSE, 1/2"ID X 2.3"LL	SS 300 SERIES
9	-	1	BRAIDED FLEX HOSE, 3/4"ID X 5" LL	SS 300 SERIES
3	-	1	MLI BLANKET, 10 LAYERS	-
2	-	4	MLI BLANKET, 10 LAYERS	-
1	-	1	CERNOX, TEMP SENSOR	-

REV	DWG	CHK	ZONE	DATE	CHANGES
B	ARH	DPO		02/27/03	REVISED DRAWING NOTES 13, 16 & 17. UPDATED SUBASSEMBLY VIEWS
A	JDR	SPV		11/8/02	INITIAL RELEASE

THIRD ANGLE PROJECTION

UNLESS OTHERWISE SPECIFIED
TOLERANCES: X.X ± 0.1 FRAC. ± 1/64; X.XX ± 0.03 Angles ± 1.00°; X.XXX ± 0.010 FINISH 125 √ (µin)
DO NOT SCALE PRINT
THREADS ARE CLASS 2.
CHAMFER ENDS OF ALL SCREW THEADS 30°
CUT ROUND, 1.5 THREAD RELIEF ON MACHINED THREADS
BREAK EDGES .015 MAX. ON MACHINED WORK
REMOVE BURRS, WELD SPLATTER & LOOSE SCALE
IN ACCORDANCE WITH ASME Y14.5M & B46.1

SHOP ORDERS
ACCT NO. / DEL NO. / TO / NO. REQD / SER NO. / DATE ISSD / DATE REQD / SURFACE TREATMT / IDENT METHOD / TAG / PROJECT NUMBER N/A / PROJECT NAME N/A
DWN BY KNOLLS DATE 12-Mar-02
CHK BY S.VIROSTEK DATE 8-NOV-02
APR BY Jon Zbasnik DATE 25-JUL-02

ERNEST ORLANDO LAWRENCE BERKELEY NATIONAL LABORATORY
UNIVERSITY OF CALIFORNIA . BERKELEY

LHC IR FEEDBOX
CRYOGENICS
DH VENT PIPE

MICROFILMED: | DWG. TYPE ASSEM | SHOWN ON | SCALE: 1/4 | DO NOT SCALE PRINTS
SHEET 1 OF 2
PATENT CLEAR: | DESIGN ACCT. NO. Z5LCE2 | CATEGORY CODE LH2003 | DWG. NO. 25I6376 | SIZE B | REV B

DWG. NO. 25I6376 REV. B SH. 1

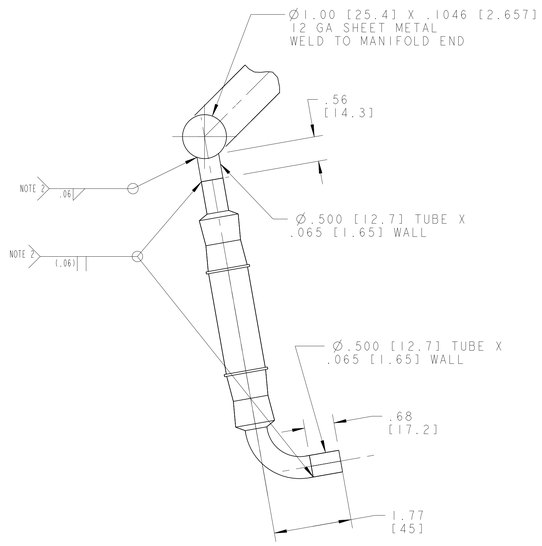

DETAIL D
SCALE 3/4

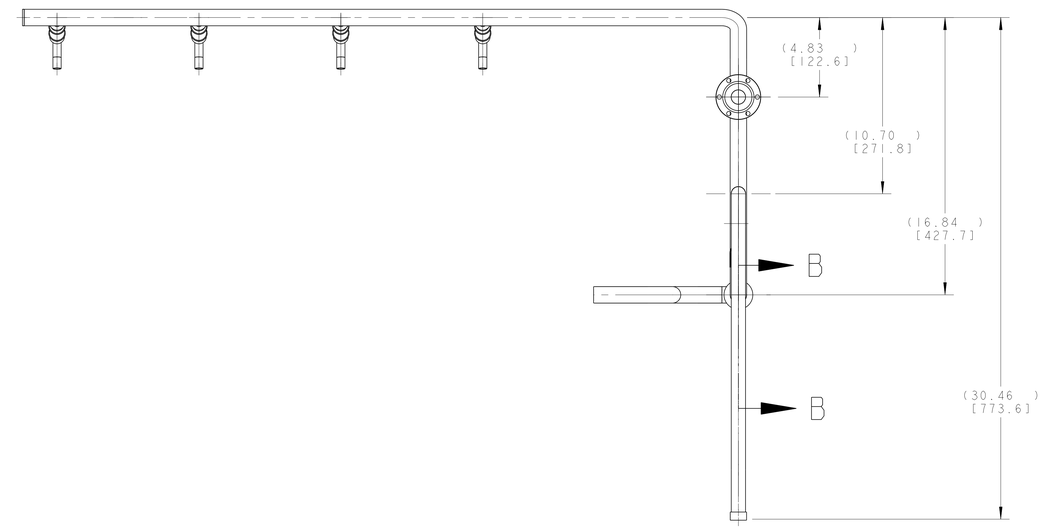

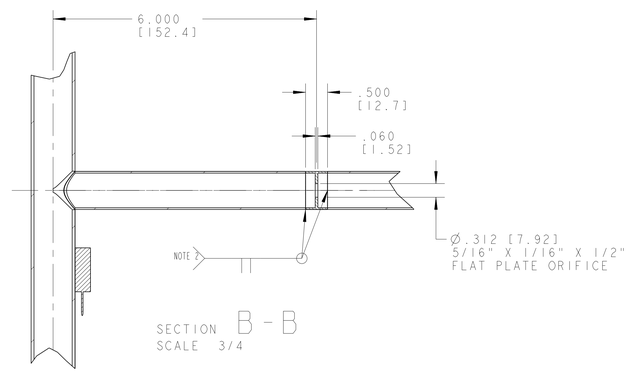

SECTION B - B
SCALE 3/4

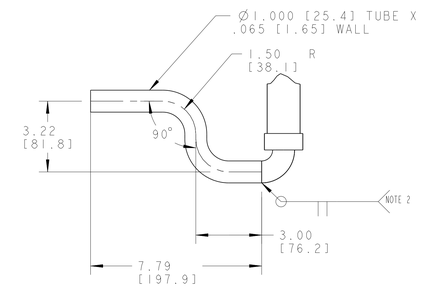

DETAIL E
SCALE 3/8

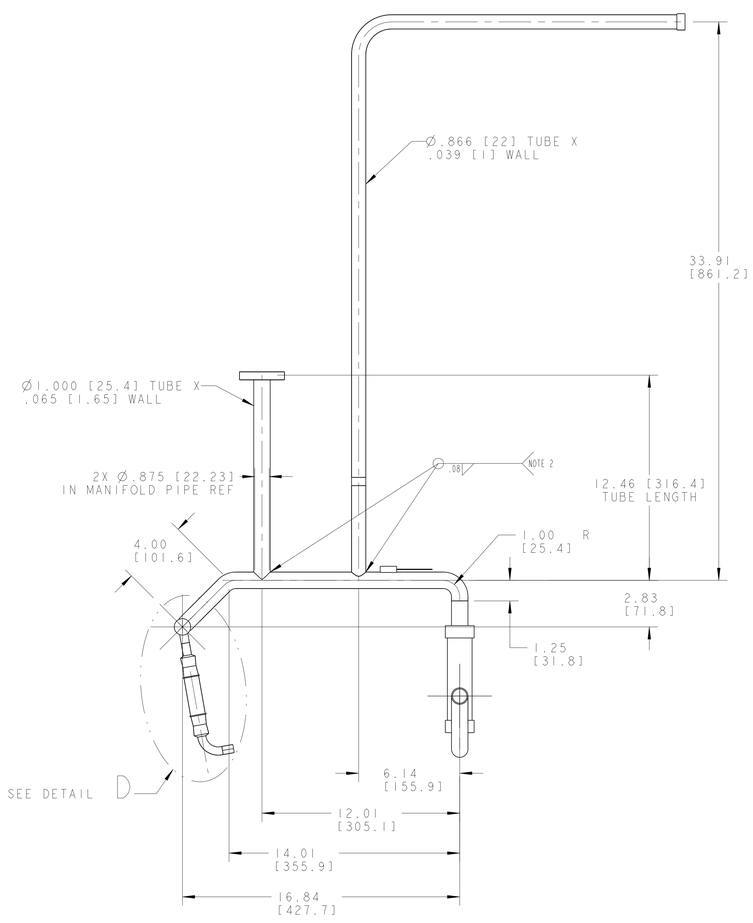

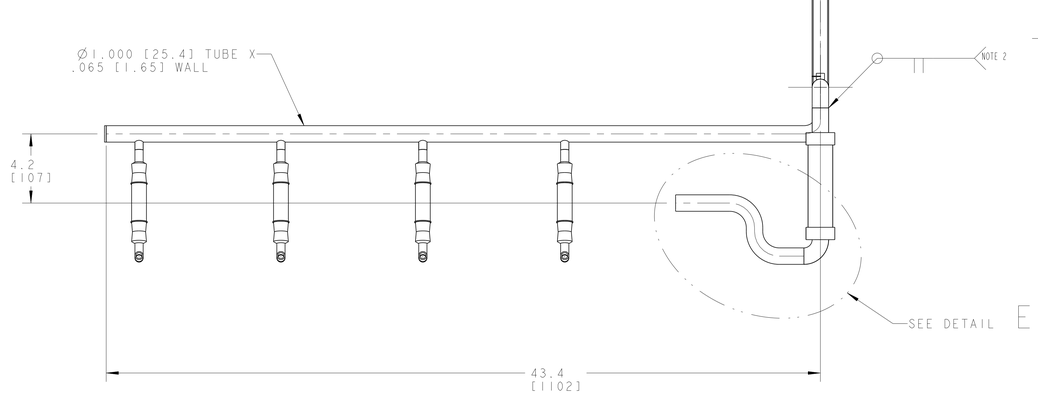

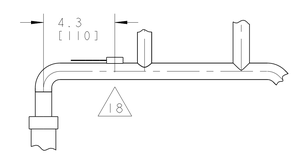

ERNEST ORLANDO LAWRENCE BERKELEY NATIONAL LABORATORY UNIVERSITY OF CALIFORNIA · BERKELEY				
LHC IR FEEDBOX CRYOGENICS DH VENT PIPE				
MICROFILMED:	DWG. TYPE ASSEM	SHOWN ON .	SCALE: 9/32	DO NOT SCALE PRINTS
			SHEET 2 OF 2	
PATENT CLEAR:	DESIGN ACCT. NO. Z5LCE2	CATEGORY CODE LH2003	DWG. NO. 2516376	REV. B

DWG. NO. 2516376 REV. B SH. 2