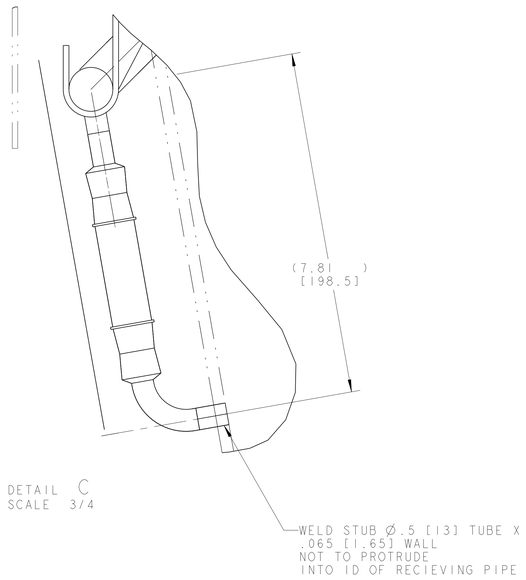

DETAIL C
SCALE 3/4

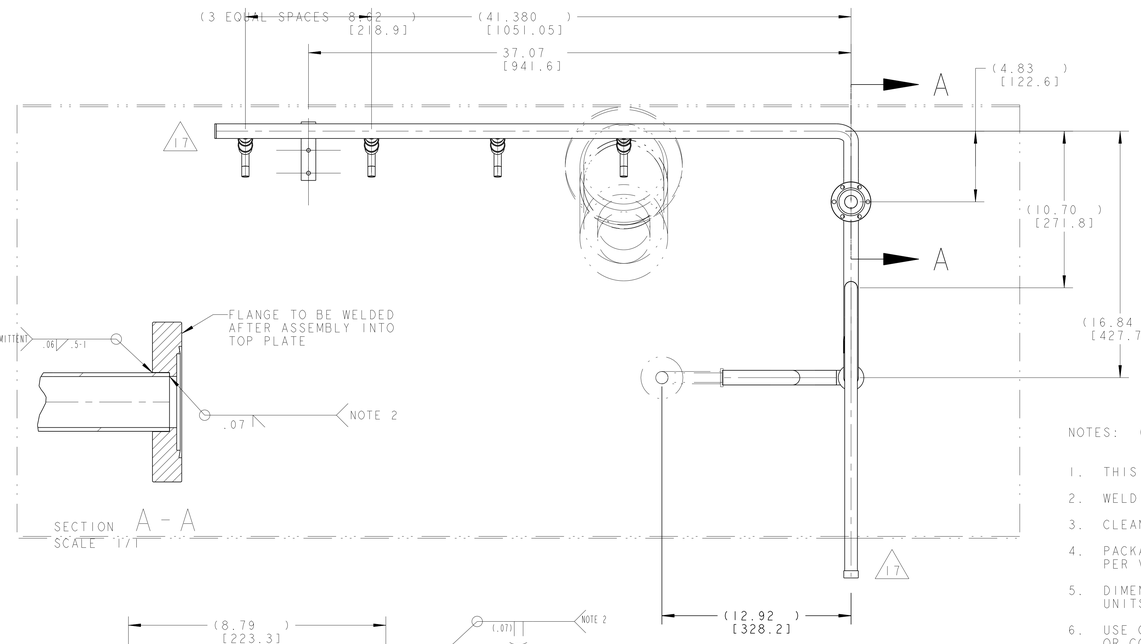

SECTION A - A
SCALE 1/1

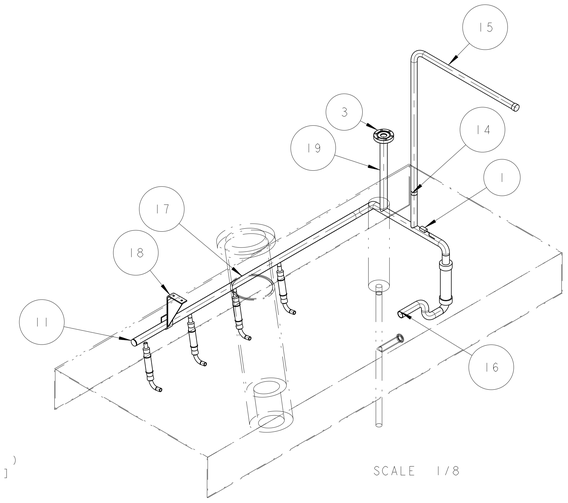

SCALE 1/8

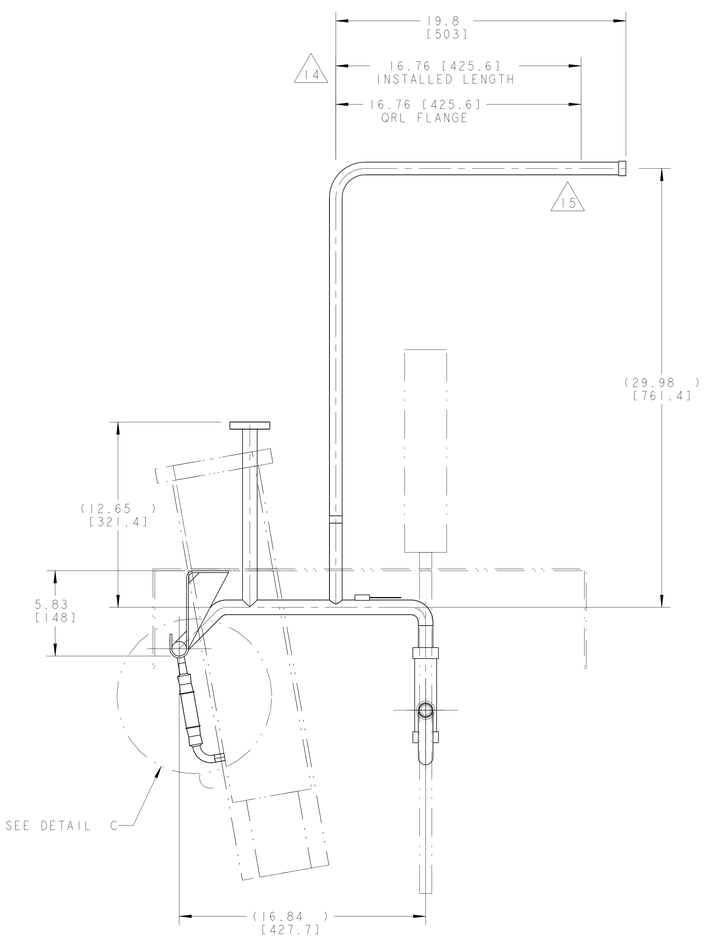

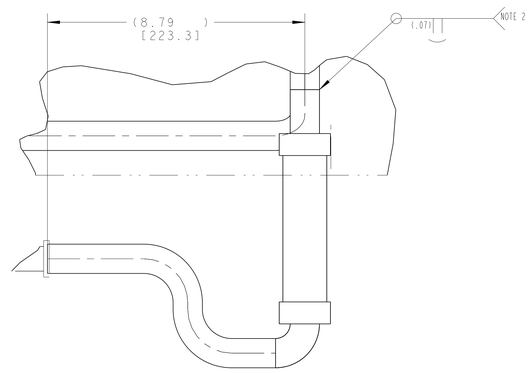

DETAIL B
SCALE 1/2

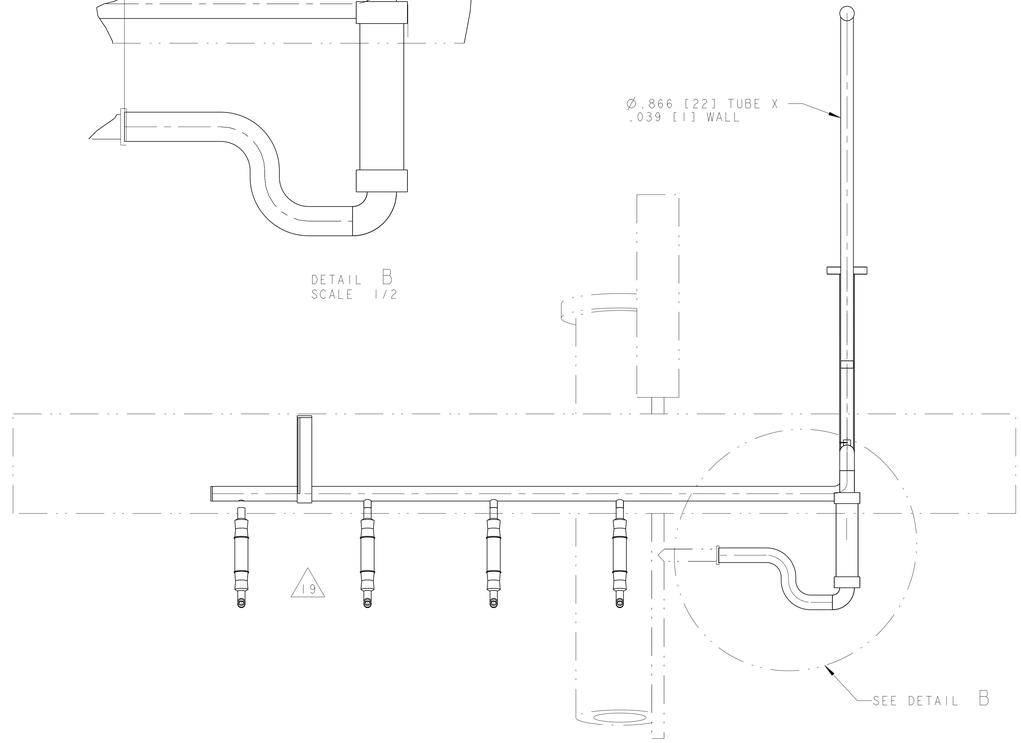

NOTES: (UNLESS OTHERWISE SPECIFIED)

1. THIS IS A CRYOGENIC VACUUM COMPONENT.
2. WELDING PROCEDURE: PER VENDOR SPECIFICATION WITH LBNL APPROVAL.
3. CLEANING PROCEDURE : PER VENDOR SPECIFICATION WITH LBNL APPROVAL.
4. PACKAGING AND STORAGE PROCEDURE OF THE COMPONENTS: PER VENDOR SPECIFICATION WITH LBNL APPROVAL.
5. DIMENSIONS AND TOLERANCING PER ANSI Y14.5M-1982. UNITS ARE IN INCHES [mm] UNLESS OTHERWISE SPECIFIED.
6. USE OF SULFUR OR SILICONE BEARING OILS, LUBRICANTS, OR COOLANTS ARE STRICTLY PROHIBITED.
7. USE OF RESIN OR RUBBER BONDED ABRASIVES UNDER POWER IS STRICTLY PROHIBITED. USE VITREOUS BONDED ABRASIVES ONLY.
8. VENDOR SUGGESTED CHANGES TO WELD PREPS; SUBJECT TO LBNL APPROVAL.
9. FITTINGS MAY BE USED IN PLACE OF BENDS; SUBJECT TO LBNL APPROVAL.
10. VENDOR SUGGESTED CHANGES TO TOLERANCES TO FACILITATE FABRICATION OR ASSEMBLY; SUBECT TO LBNL APPROVAL.
11. REMOVE ALL THE BURRS AND REAM THE ENDS FOR CIRCULARITY AND CLEAN ENDS.
12. TUBE END SURFACE MUST BE PERPENDICULAR TO THE TUBE AXIS WITHIN +/-.010.
13. PERFORM ACCEPTANCE TESTS PER SECTION 3.2 OF LBNL SPECIFICATION M856.
14. A MARK DESIGNATING THE INSTALLED LENGTH WILL BE UTILIZED DURING FINAL INSTALLATION OF THE FEEDBOX ASSEMBLY. MARK, SCRIBE OR ETCH THIS LOCATION IN A PERMANENT MANNER, SUBJECT TO LBNL APPROVAL, TO AN ACCURACY OF ±0.063".
15. PROVIDE A MINIMUM LENGTH OF 4.0" OF STRAIGHT, SMOOTH PIPE ON THE INDICATED SIDE OF THE INSTALLED LENGTH MARK FOR PIPE WELDING DURING FINAL INSTALLATION OF THE FEEDBOX ASSEMBLY.
16. PIPE MUST BE STRAIGHT AND SMOOTH (NO BUMPS) FOR 0.5" ON EITHER SIDE OF THE CENTER-PLANE OF THE SUPPORT.
17. CAP BOTH ENDS OF PIPE AFTER ACCEPTANCE TESTS PER SECTION 3.2 OF LBNL SPECIFICATION M856.
18. INSTALL TEMPERATURE SENSOR PER LHC SPECIFICATION LHC-QIT-ES-0002. SENSOR TO BE PROVIDED BY LBNL.
19. ALL PIPES TO BE INSULATED PER MLI SPECIFICATION PROVIDED BY VENDOR AND SUBJECT TO LBNL APPROVAL. IN LOCATIONS WHERE PIPES PASS THROUGH SUPPORT ASSEMBLIES, INSULATION IS TO BE WRAPPED WITH KAPTON TAPE FOR PROTECTION FROM ABRASION DURING THERMAL CYCLING.

ITEM	PART NO	REQD	DESCRIPTION	MATERIAL
20	-	4	TUBE, PER ASTM A269	SS 304L
19	-	1	TUBE, PER ASTM A269	SS 304L
18	25M856	1	PIPE,HANGER	SS 304L
17	-	1	HTS MANIFOLD HEADER, SS TUBING	SS 304L
16	-	1	TUBE, PER ASTM A269	SS 304L
15	-	1	TUBE, PER ASTM A269	SS 304L
14	-	1	Ø5/16" X 1/16" FLAT PLATE ORIFICE	SS 304L
13	-	3	TUBE, PER ASTM A269	SS 304L
11	-	1	HTS MANIFOLD PIPE CAP	SS 304L
9	-	4	BRAIDED FLEX HOSE, 1/2"ID X 2.3"LL	SS 300 SERIES
3	-	1	2-3/4 CONFLAT, MDC 110012	SS 304L
2	-	1	BRAIDED FLEX HOSE, 1"ID X 5"LL	SS 300 SERIES
1	-	1	CERNOX, TEMP SENSOR	-

THIRD ANGLE PROJECTION

REV	DWG	CHK	ZONE	DATE	CHANGES
A	JDR	SPV		11/8/02	INITIAL RELEASE

UNLESS OTHERWISE SPECIFIED
TOLERANCES: X.X ± 0.1 FRAC. ± 1/64; X.XX ± 0.03 Angles ± 1.00°; X.XXX ± 0.010 FINISH 125 μin
DO NOT SCALE PRINT
THREADS ARE CLASS 2
CHAMFER ENDS OF ALL SCREW THREADS 30°
CUT ROUND, 1.5 THREAD RELIEF ON MACHINED THREADS
BREAK EDGES .016 MAX. ON MACHINED WORK
REMOVE BURRS, WELD SPLATTER & LOOSE SCALE
IN ACCORDANCE WITH ASME Y14.5M & B46.1

SHOP ORDERS
ACCT NO. / NO. REQD / SER NO. / DATE ISSD / REL TO / DATE REQD / SURFACE TREATMT / IDENT METHOD / TAG / PROJECT NUMBER: N/A / PROJECT NAME: N/A
DWN BY: KNOLLS — DATE: 12-Mar-02
CHK BY: S.VIROSTEK — DATE: 8-NOV-02
APP BY: Jon Zbasnik — DATE: 25-JUL-02

ERNEST ORLANDO LAWRENCE BERKELEY NATIONAL LABORATORY
UNIVERSITY OF CALIFORNIA · BERKELEY

LHC IR FEEDBOX
CRYOGENICS
DH VENT PIPE

MICROFILMED: | DWG. TYPE: ASSEM | SHOWN ON: | SCALE: 1/4 | DO NOT SCALE PRINTS
PATENT CLEAR: | DESIGN ACCT. NO.: Z5LCE2 | CATEGORY CODE: LH2003 | DWG. NO.: 2516366 | SIZE: A | REV.: A
SHEET 1 OF 2

DWG NO. 2516366 SHT 1 REV A

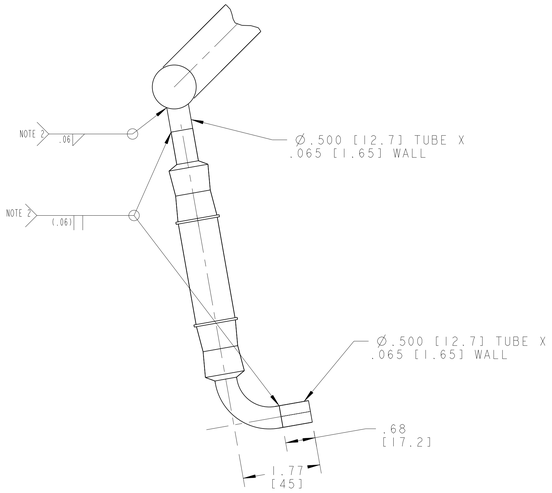

DETAIL D
SCALE 3/4

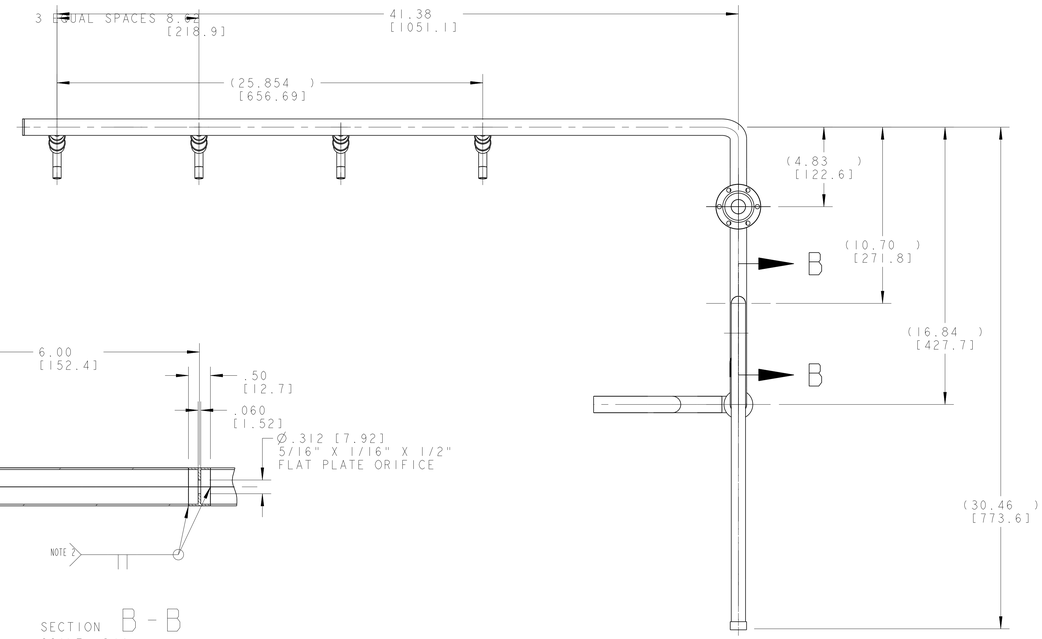

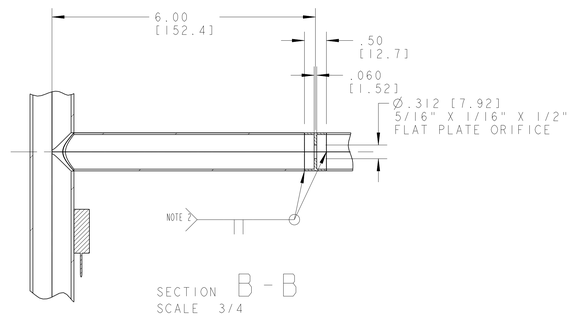

SECTION B - B
SCALE 3/4

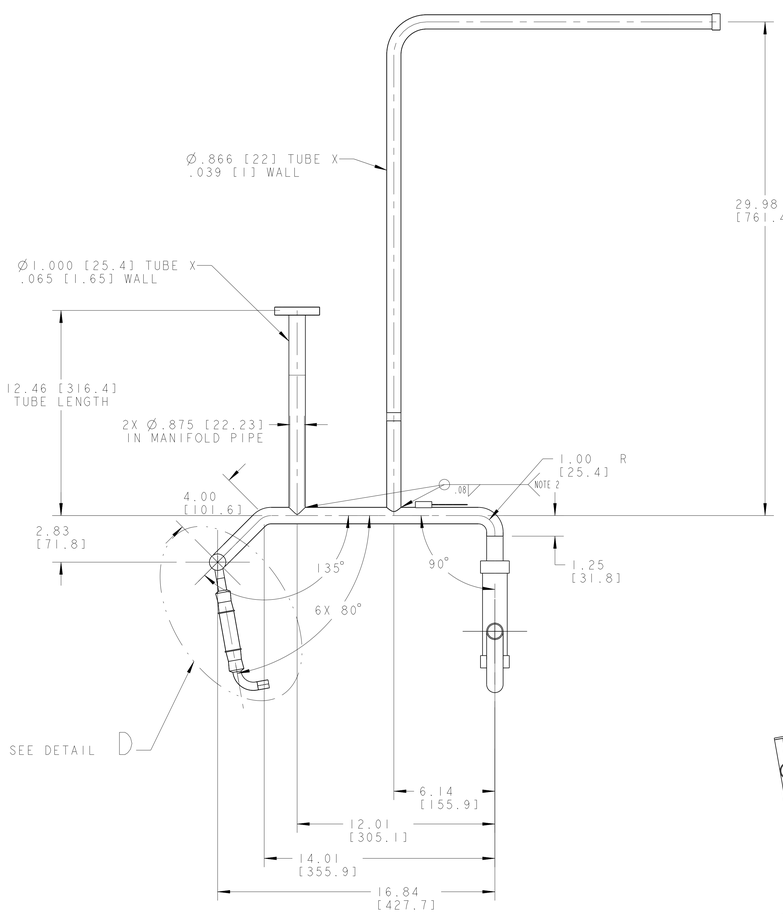

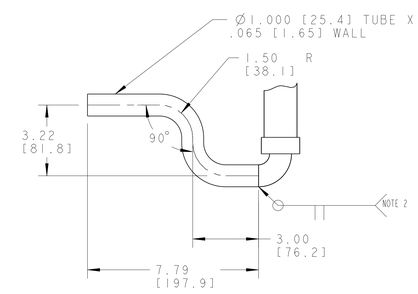

DETAIL E
SCALE 3/8

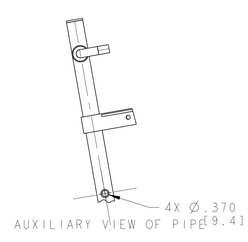

AUXILIARY VIEW OF PIPE

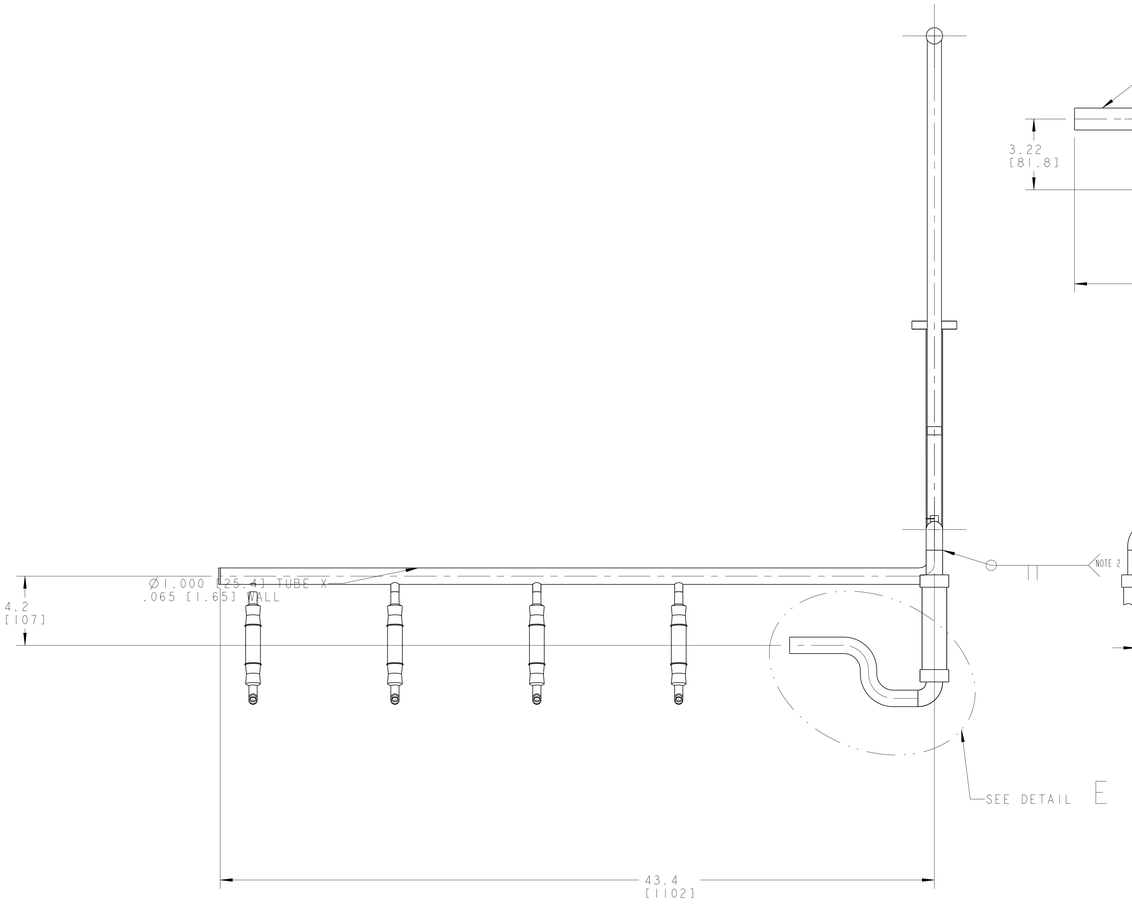

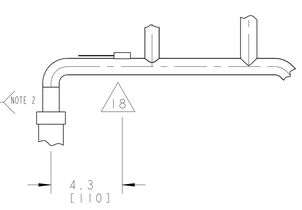

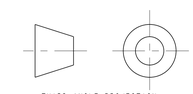

THIRD ANGLE PROJECTION

ERNEST ORLANDO LAWRENCE
BERKELEY NATIONAL LABORATORY
UNIVERSITY OF CALIFORNIA - BERKELEY

LHC IR FEEDBOX
CRYOGENICS
DH VENT PIPE

MICROFILMED:	DWG. TYPE	SHOWN ON	SCALE: 9/32	DO NOT SCALE PRINTS
	ASSEM	.	SHEET 2 OF 2	
PATENT CLEAR:	DESIGN ACCT. NO.	CATEGORY CODE	DWG. NO.	SIZE / REV.
	Z5LCE2	LH2003	2516366	A

DWG. NO. 2516366 SIZE / REV. A 2