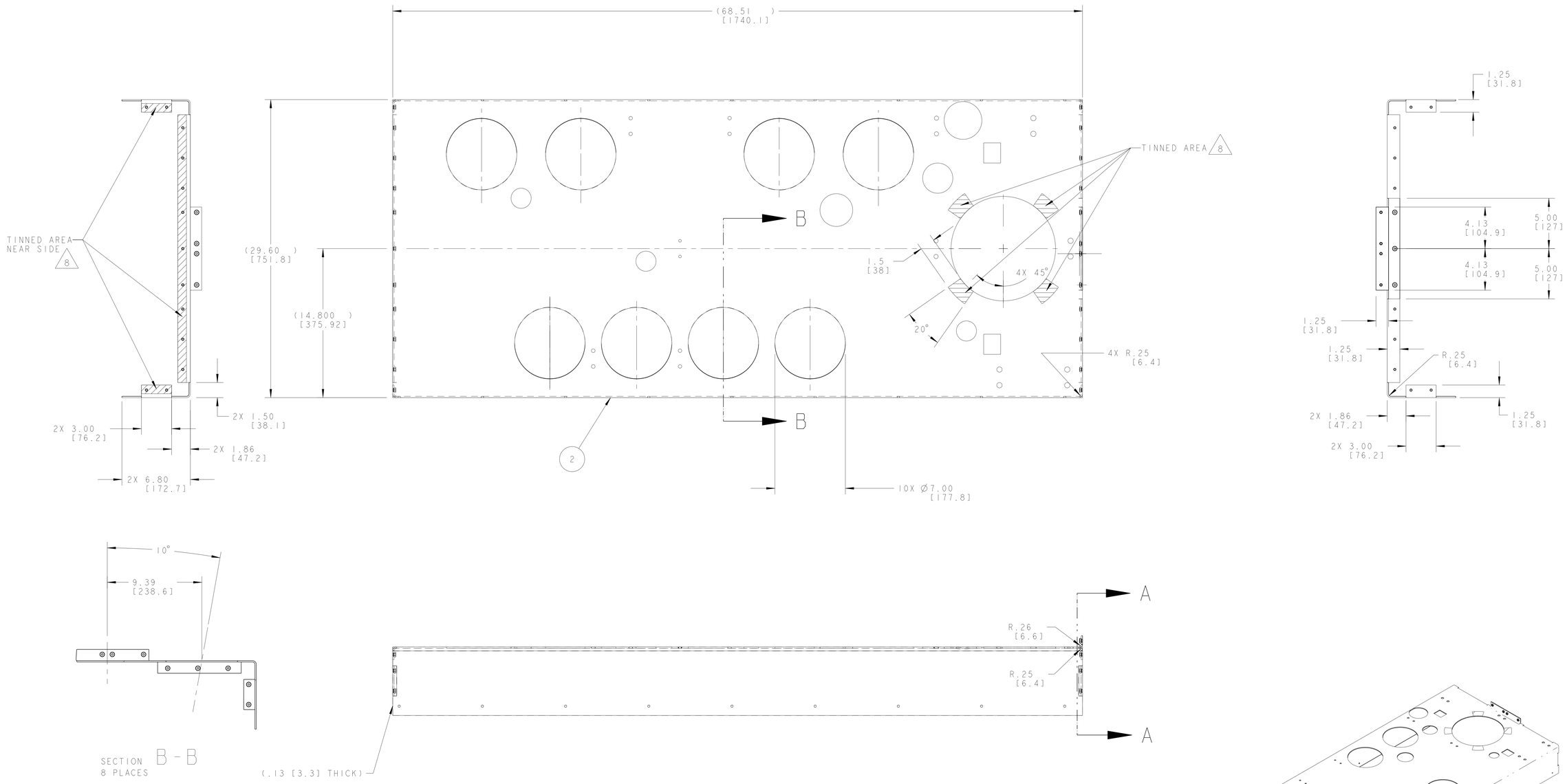

SECTION B - B
8 PLACES

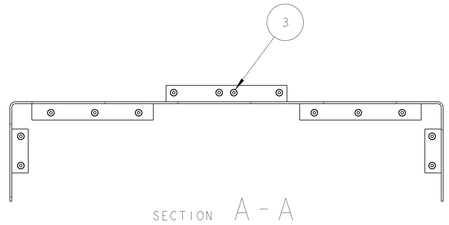

SECTION A - A

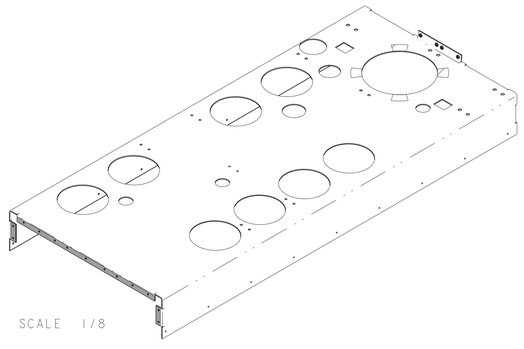

SCALE 1/8

NOTES: (UNLESS OTHERWISE SPECIFIED)

1. THIS IS A CRYOGENIC VACUUM COMPONENT.
2. WELDING PROCEDURE: PER VENDOR SPECIFICATION WITH LBNL APPROVAL.
3. CLEANING PROCEDURE : PER VENDOR SPECIFICATION WITH LBNL APPROVAL.
4. PACKAGING AND STORAGE PROCEDURE OF THE COMPONENTS: PER VENDOR SPECIFICATION WITH LBNL APPROVAL.
5. DIMENSIONS AND TOLERANCING PER ANSI Y14.5M-1982. UNITS ARE IN INCHES [mm] UNLESS OTHERWISE SPECIFIED.
6. USE OF SULFUR OR SILICONE BEARING OILS, LUBRICANTS, OR COOLANTS ARE STRICTLY PROHIBITED.
7. USE OF RESIN OR RUBBER BONDED ABRASIVES UNDER POWER IS STRICTLY PROHIBITED. USE VITREOUS BONDED ABRASIVES ONLY.
8. TIN NOTED AREAS WITH 60/40 Sn/Pb SOLDER, USE RESIN FLUX.

THIRD ANGLE PROJECTION

ITEM	PART NO.	REQD	DESCRIPTION	MATERIAL
3	-	27	M5 CAPTIVE NUT, PEM AC-M5-1-SF	SS
2	-	1	SHEET, .125 THICK	COPPER,OFHC, C101

REV	DWG	CHK	ZONE	DATE	CHANGES
A	ARH	SPV		9/19/02	INITIAL RELEASE

UNLESS OTHERWISE SPECIFIED
TOLERANCES: X.X ± 0.1 FRAC. ± 1/64; X.XX ± 0.03 Angles ± 1.00°; X.XXX ± 0.010 FINISH 125 Ra
DO NOT SCALE PRINT
THREADS ARE CLASS 2
CHAMFER ENDS OF ALL SCREW THEADS 30°
CUT ROUND, 1.5 THREAD RELIEF ON MACHINED THREADS
BREAK EDGES .016 MAX. ON MACHINED WORK
REMOVE BURRS, WELD SPLATTER & LOOSE SCALE
IN ACCORDANCE WITH ASME Y14.5M & B46.1

SHOP ORDERS
ACCT NO. / NO. REQD
SEL ID
SURFACE TREATMT
IDENT METHOD: TAG
PROJECT NUMBER: N/A
PROJECT NAME: N/A
DWN By: R. LA MANTIA — DATE: 18-Feb-02
CHK By: Jon Zbasnik/S.Virostek — DATE: 13-AUG-02
APR By: Jon Zbasnik/D.Osheitz/D.Gh — DATE: 13-AUG-02
GEN NO.
DATE ISSD
DATE REQD

ERNEST ORLANDO LAWRENCE BERKELEY NATIONAL LABORATORY
UNIVERSITY OF CALIFORNIA - BERKELEY

LHC IR FEEDBOX
CRYOGENICS
TOP COVER, NEGATIVE SD, DFBXB

MICROFILMED: | DWG. TYPE: ASSEM | SHOWN ON: - | SCALE: 1/4 | DO NOT SCALE PRINTS
PATENT CLEAR: | DESIGN ACCT. NO.: Z5LCE2 | CATEGORY CODE: LH2003 | DWG. NO.: 2516286 | SIZE: A | REV.:
SHEET 1 OF 4

DWG. NO. 2516286 SIZE A REV 1

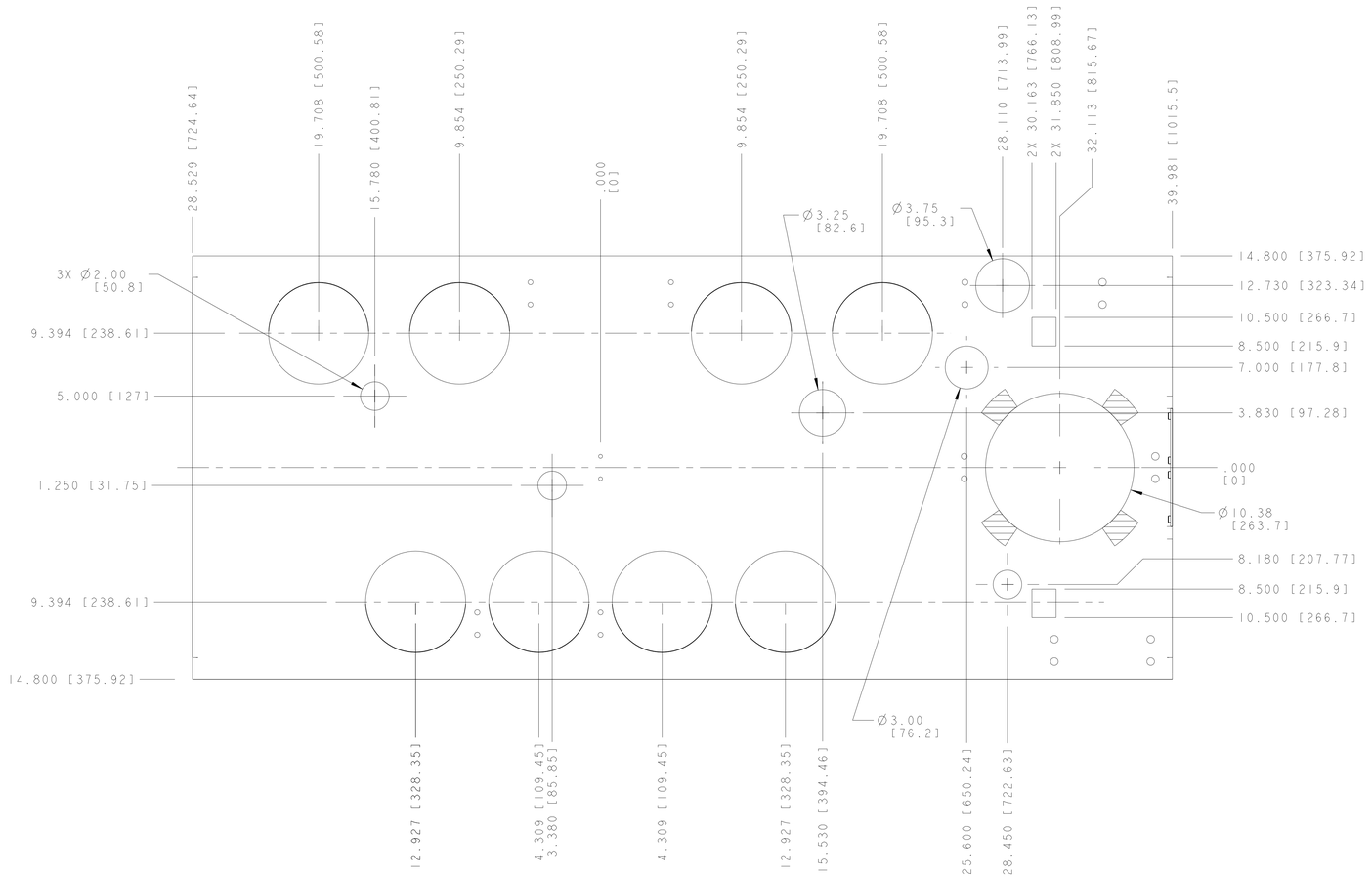

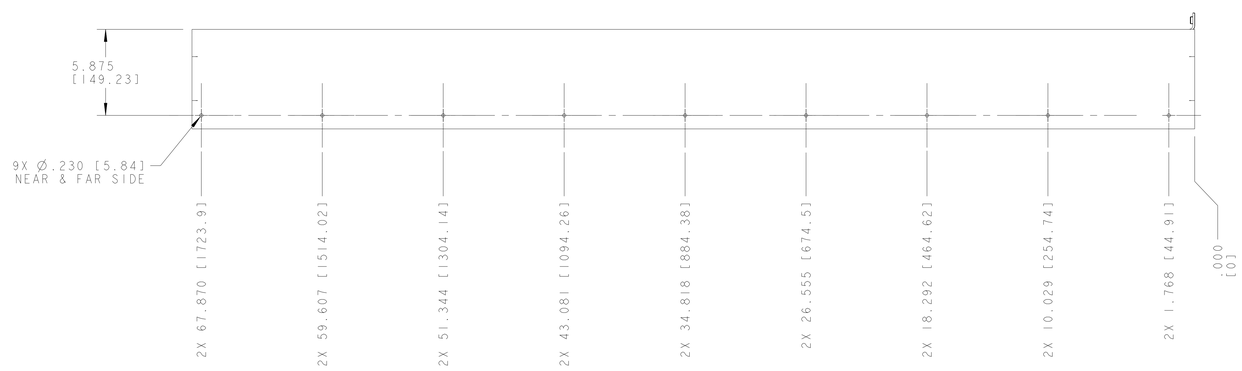

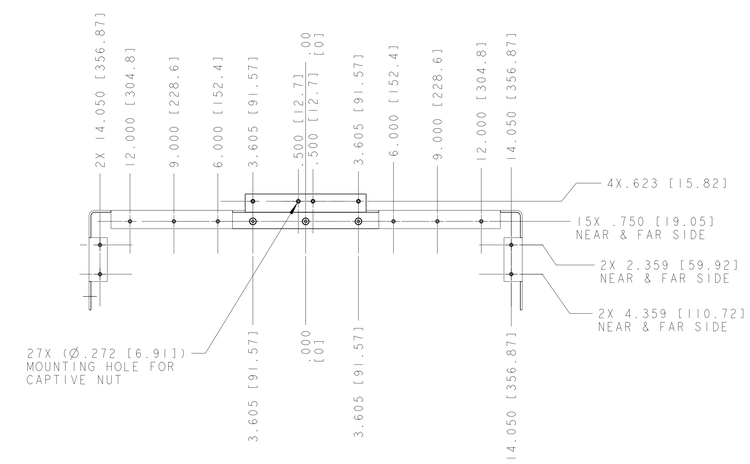

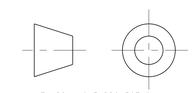

THIRD ANGLE PROJECTION

ERNEST ORLANDO LAWRENCE BERKELEY NATIONAL LABORATORY
UNIVERSITY OF CALIFORNIA - BERKELEY

LHC IR FEEDBOX
CRYOGENICS
TOP COVER, NEGATIVE SD, DFBXB

MICROFILMED:	DWG. TYPE	SHOWN ON	SCALE: 1/4	DO NOT SCALE PRINTS
	ASSEM	-	SHEET 2 OF 4	
PATENT CLEAR:	DESIGN ACCT. NO.	CATEGORY CODE	DWG. NO.	SIZE / REV.
	Z5LCE2	LH2003	2516286	A

DWG. NO. 2516286 SHT. 2 REV. A

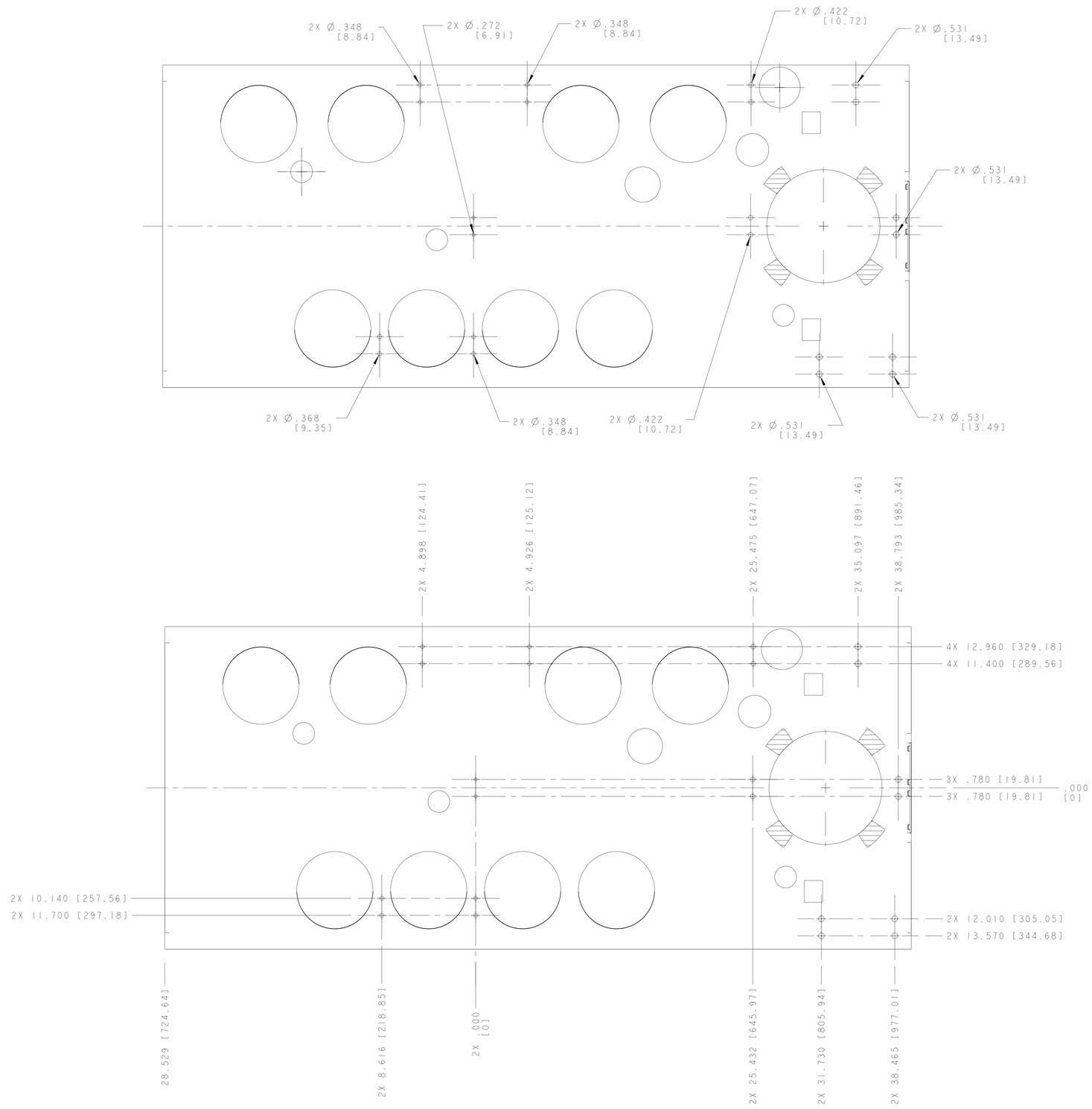

ERNEST ORLANDO LAWRENCE
BERKELEY NATIONAL LABORATORY
UNIVERSITY OF CALIFORNIA - BERKELEY

LHC IR FEEDBOX
CRYOGENICS
TOP COVER, NEGATIVE SD, DFBXB

MICROFILMED:	DWG. TYPE	SHOWN ON	SCALE: 1/4	DO NOT SCALE PRINTS
	ASSEM	-	SHEET 3 OF 4	
PATENT CLEAR:	DESIGN ACCT. NO.	CATEGORY CODE	DWG. NO.	SIZE / REV.
	Z5LCE2	LH2003	2516286	A

DWG. NO. 2516286 SIZE A REV. 3

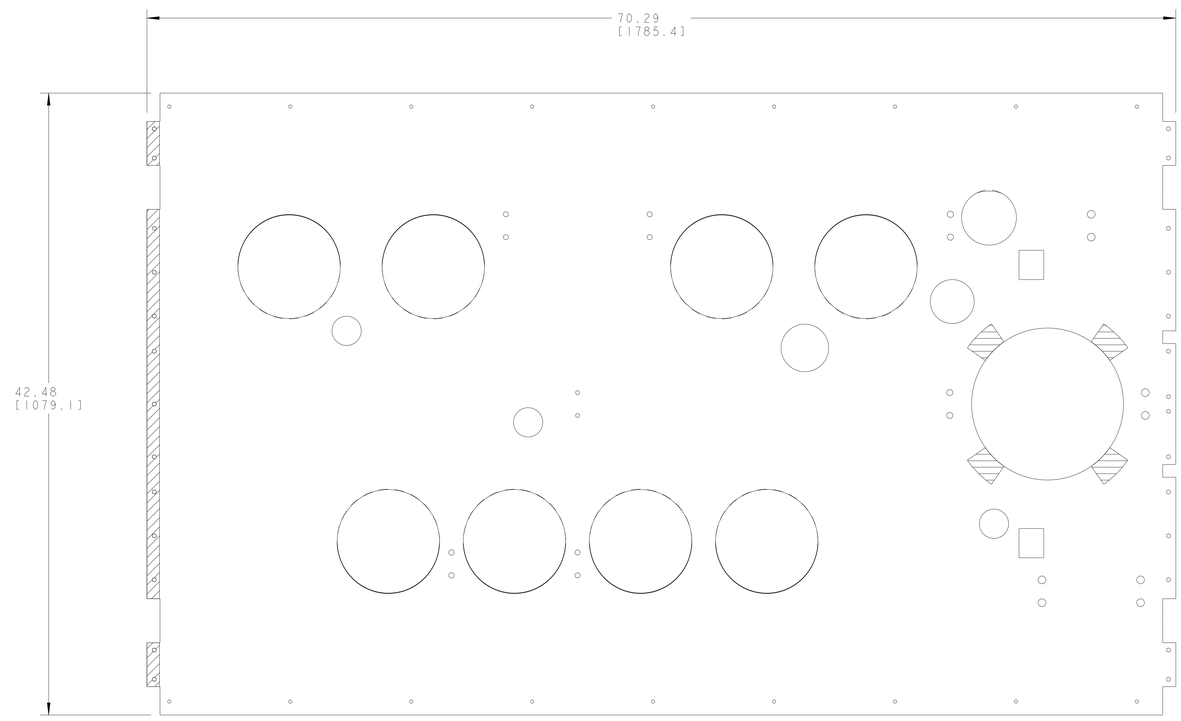

FLAT PATTERN
SCALE 1/4

ERNEST ORLANDO LAWRENCE
BERKELEY NATIONAL LABORATORY
UNIVERSITY OF CALIFORNIA - BERKELEY

LHC IR FEEDBOX
CRYOGENICS
TOP COVER, NEGATIVE SD, DFBXB

MICROFILMED:	DWG. TYPE	SHOWN ON	SCALE: 1/4	DO NOT SCALE PRINTS
	ASSEM	-	SHEET 4 OF 4	
PATENT CLEAR:	DESIGN ACCT. NO.	CATEGORY CODE	DWG. NO.	SIZE / REV.
	Z5LCE2	LH2003	2516286	A

DWG. NO. 2516286 SIZE A REV. 4