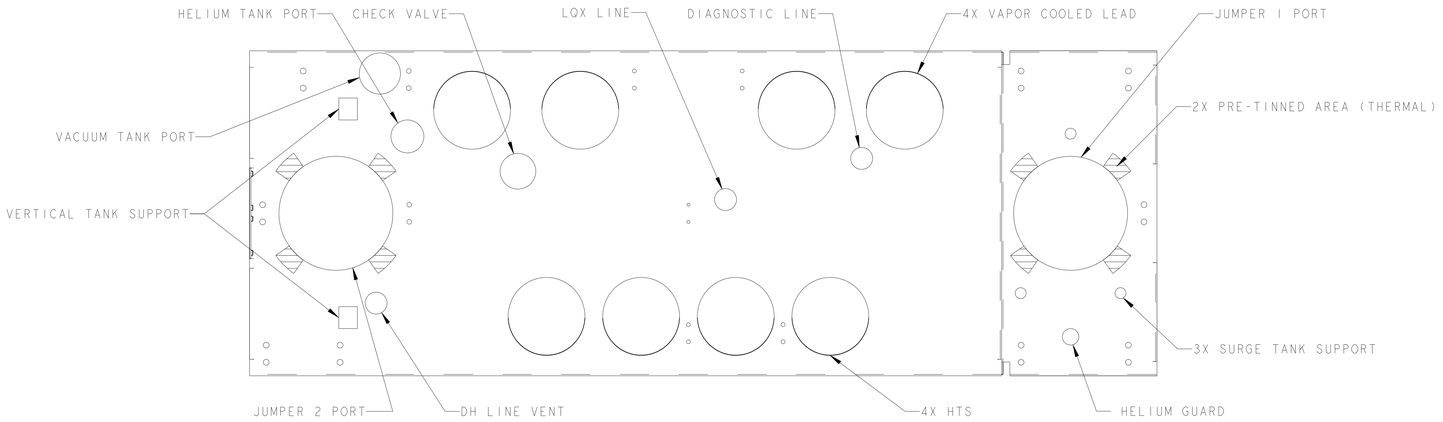

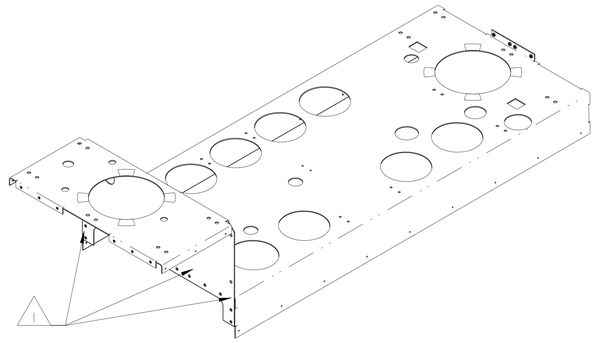

SCALE 1/8

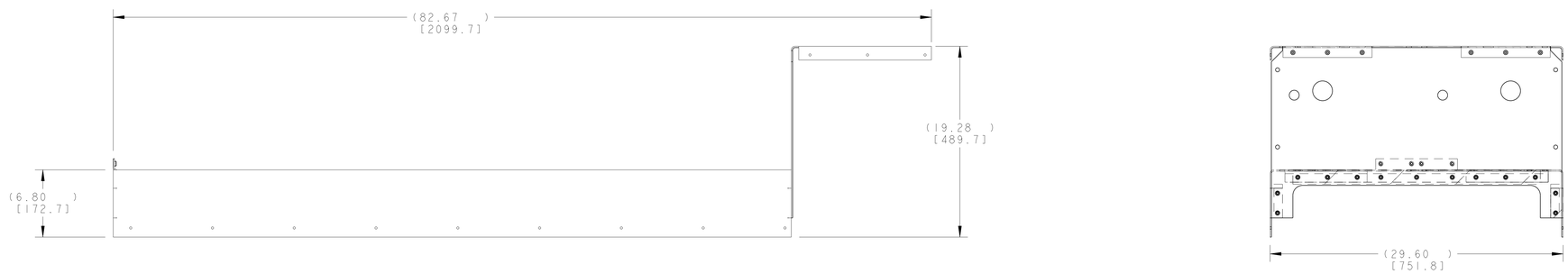

NOTES: (UNLESS OTHERWISE SPECIFIED)

1. ITEMS 1 AND 2 ASSEMBLED WITH FASTENERS IN NEXT ASSEMBLY, THEN RE-FLOW SOLDER FOR THERMAL CONDUCTIVITY.
2. THIS IS A CRYOGENIC VACUUM COMPONENT.
3. WELDING PROCEDURE: PER VENDOR SPECIFICATION WITH LBNL APPROVAL.
4. CLEANING PROCEDURE : PER VENDOR SPECIFICATION WITH LBNL APPROVAL.
5. PACKAGING AND STORAGE PROCEDURE OF THE COMPONENTS: PER VENDOR SPECIFICATION WITH LBNL APPROVAL.
6. DIMENSIONS AND TOLERANCING PER ANSI Y14.5M-1982. UNITS ARE IN INCHES [mm] UNLESS OTHERWISE SPECIFIED.
7. USE OF SULFUR OR SILICONE BEARING OILS, LUBRICANTS, OR COOLANTS ARE STRICTLY PROHIBITED.
8. USE OF RESIN OR RUBBER BONDED ABRASIVES UNDER POWER IS STRICTLY PROHIBITED. USE VITREOUS BONDED ABRASIVES ONLY.
9. PROTECT FINISHED PART BY BAGGING OR SIMILAR METHOD TO PROTECT AND MAINTAIN CLEANLINESS DURING SHIPMENT AND STORAGE.

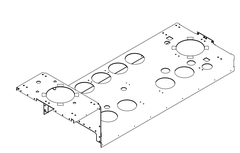

SCALE 3/64

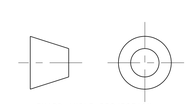

THIRD ANGLE PROJECTION

ITEM	PART NO	REQD	DESCRIPTION	MATERIAL
2	251071	1	TOP SHIELD, DFBXA/DFBXC/DFBXG	COPPER, OFHC, C101
1	251624	1	TOP COVER, NEGATIVE SD, DFBXA	COPPER, OFHC, C101

REV	DWG	CHK	ZONE	DATE	CHANGES
A	JDR	DPO		11-06-02	INITIAL RELEASE

UNLESS OTHERWISE SPECIFIED

TOLERANCES		
	X.X ± 0.1	FRAC. ± 1/64
	X.XX ± 0.03	Angles ± 1.00°
	X.XXX ± 0.010	FINISH 125/

DO NOT SCALE PRINT

THREADS ARE CLASS 2
CHAMFER ENDS OF ALL SCREW TREADS 30°
CUT ROUND, 1.5 THREAD RELIEF ON MACHINED THREADS
BREAK EDGES .016 MAX. ON MACHINED WORK
REMOVE BURRS, WELD SPLATTER & LOOSE SCALE
IN ACCORDANCE WITH ASME Y14.5M & B46.1

SHOP ORDERS

ACCT NO.	NO. REQD	SER NO.	-
DEL TO		DATE ISSD	-
		DATE REQD	-
SURFACE TREATMT	-		
IDENT METHOD	TAG		
PROJECT NUMBER	N/A		
PROJECT NAME	N/A		
DWG BY	R. LA MANTIA	DATE	04-Aug-02
CHK BY	Jon Zbasnik	DATE	13-AUG-02
APR BY	Jon Zbasnik	DATE	13-AUG-02

ERNEST ORLANDO LAWRENCE BERKELEY NATIONAL LABORATORY
UNIVERSITY OF CALIFORNIA - BERKELEY

LHC IR FEEDBOX
CRYOGENICS
THERMAL SHIELD ASSY, DFBXA

MICROFILMED:	DWG. TYPE	SHOWN ON	SCALE: 3/16	DO NOT SCALE PRINTS
	ASSEM	251150	SHEET 1 OF 1	
PATENT CLEAR:	DESIGN ACCT. NO.	CATEGORY CODE	DWG. NO.	SIZE / REV.
	Z5LCE2	LH2003	2515896	A

DWG. NO. 2515896 SIZE A REV. 1 SH. 1