DWG. NO.	SIZE	REV.	SH.
2515864		A	1

ITEM	PART NO	REQD	DESCRIPTION	MATERIAL
9	251588	1	CLAM SHELL 2, QQSD	CDA 101
8	251587	1	CLAM SHELL 1, QQSD	CDA 101
7	-	32	WASHER, M5	SS 18-8
6	-	17	SCH, M5X.8, 8LG, SILVER PLATED	SS 18-8
5	-	15	SCH, M5X.8, 10LG, SILVER PLATED, VENTED	SS 18-8
4	-	17	M5 CAPTIVE NUT, PEM AC-M5-1-SF	SS
3	251262	18	SPACER, QQS	NEMA G10

NOTES: (UNLESS OTHERWISE SPECIFIED)

1. THIS IS A CRYOGENIC VACUUM COMPONENT.
2. CLEANING PROCEDURE : PER VENDOR SPECIFICATION WITH LBNL APPROVAL.
3. PACKAGING AND STORAGE PROCEDURE OF THE COMPONENTS: PER VENDOR SPCIFICATION WITH LBNL APPROVAL.
4. DIMENSIONS AND TOLERANCING PER ANSI Y14.5M-1982. UNITS ARE IN INCHES UNLESS OTHERWISE SPECIFIED.
5. USE OF SULFUR OR SILICONE BEARING OILS, LUBRICANTS, OR COOLANTS ARE STRICTLY PROHIBITED.
6. USE OF RESIN OR RUBBER BONDED ABRASIVES UNDER POWER IS STRICTLY PROHIBITED. USE VITREOUS BONDED ABRASIVES ONLY.

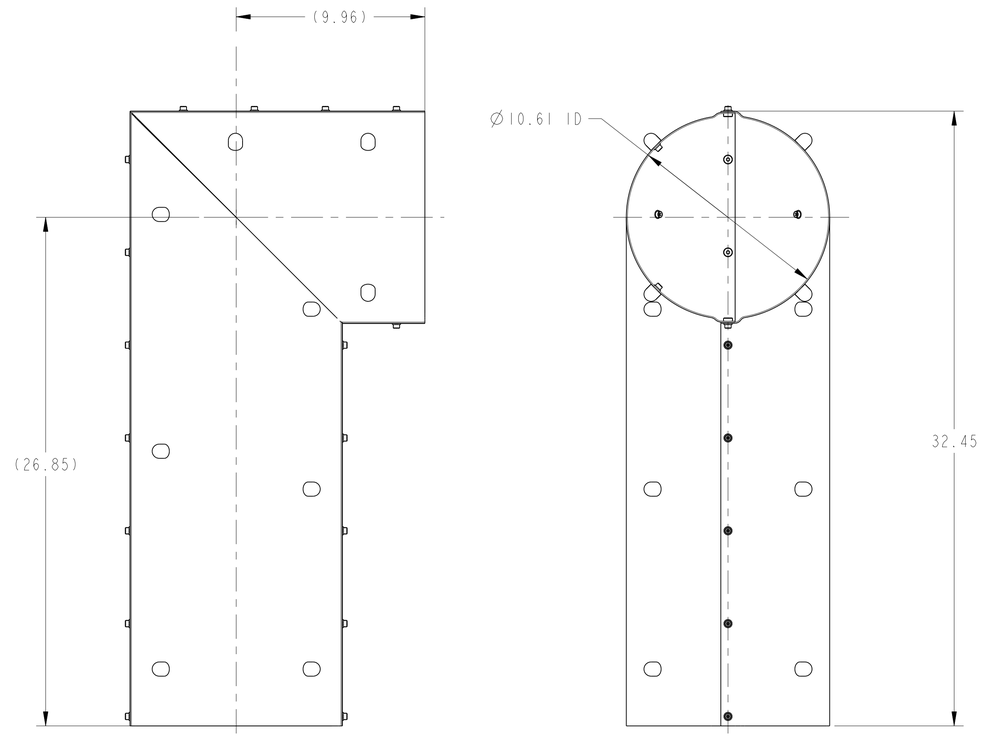

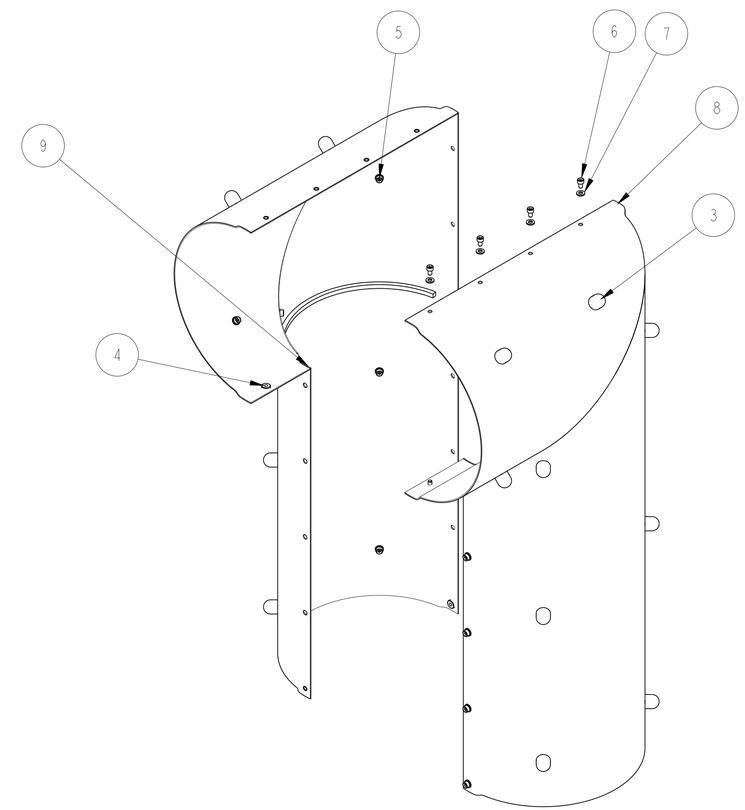

SCALE 0.250

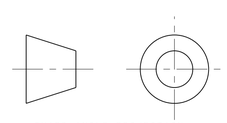

THIRD ANGLE PROJECTION

REV	DWG	CHK	ZONE	DATE	CHANGES
A	JDR	DPO		11-06-02	INITIAL RELEASE

UNLESS OTHERWISE SPECIFIED

TOLERANCES		
	X.X ± 0.1	FRAC. ± 1/64
	X.XX ± 0.03	Angles ± 1.00°
	X.XXX ± 0.010	FINISH 125 (μin)

DO NOT SCALE PRINT

THREADS ARE CLASS 2
CHAMFER ENDS OF ALL SCREW TREADS 30°
CUT ROUND, 1.5 THREAD RELIEF ON MACHINED THREADS
BREAK EDGES .016 MAX. ON MACHINED WORK
REMOVE BURRS, WELD SPLATTER & LOOSE SCALE
IN ACCORDANCE WITH ASME Y14.5M & B46.1

SHOP ORDERS

ACCT NO.	NO. REQD	SER NO.	-
DEL TO		DATE ISSD	-
SURFACE TREATMT	-	DATE REQD	-
IDENT METHOD	TAG		
PROJECT NUMBER	N/A		
PROJECT NAME	N/A		
DWG BY	DESIGNER:217	DATE	26-Feb-02
CHK BY	CHECKER:217	DATE	21-Apr-02
APR BY	APPROVER:217	DATE	21-Apr-02

ERNEST ORLANDO LAWRENCE
BERKELEY NATIONAL LABORATORY
UNIVERSITY OF CALIFORNIA - BERKELEY

LHC IR FEEDBOX
VACUUM
THERMAL SHIELD JUMPER, JC2

MICROFILMED:	DWG. TYPE	SHOWN ON	SCALE: 0.250	DO NOT SCALE PRINTS
	ASSEM	-	SHEET 1 OF 1	
PATENT CLEAR:	DESIGN ACCT. NO.	CATEGORY CODE	DWG. NO. 2515864	SIZE / REV. A
	Z5LCE2	LH2002		