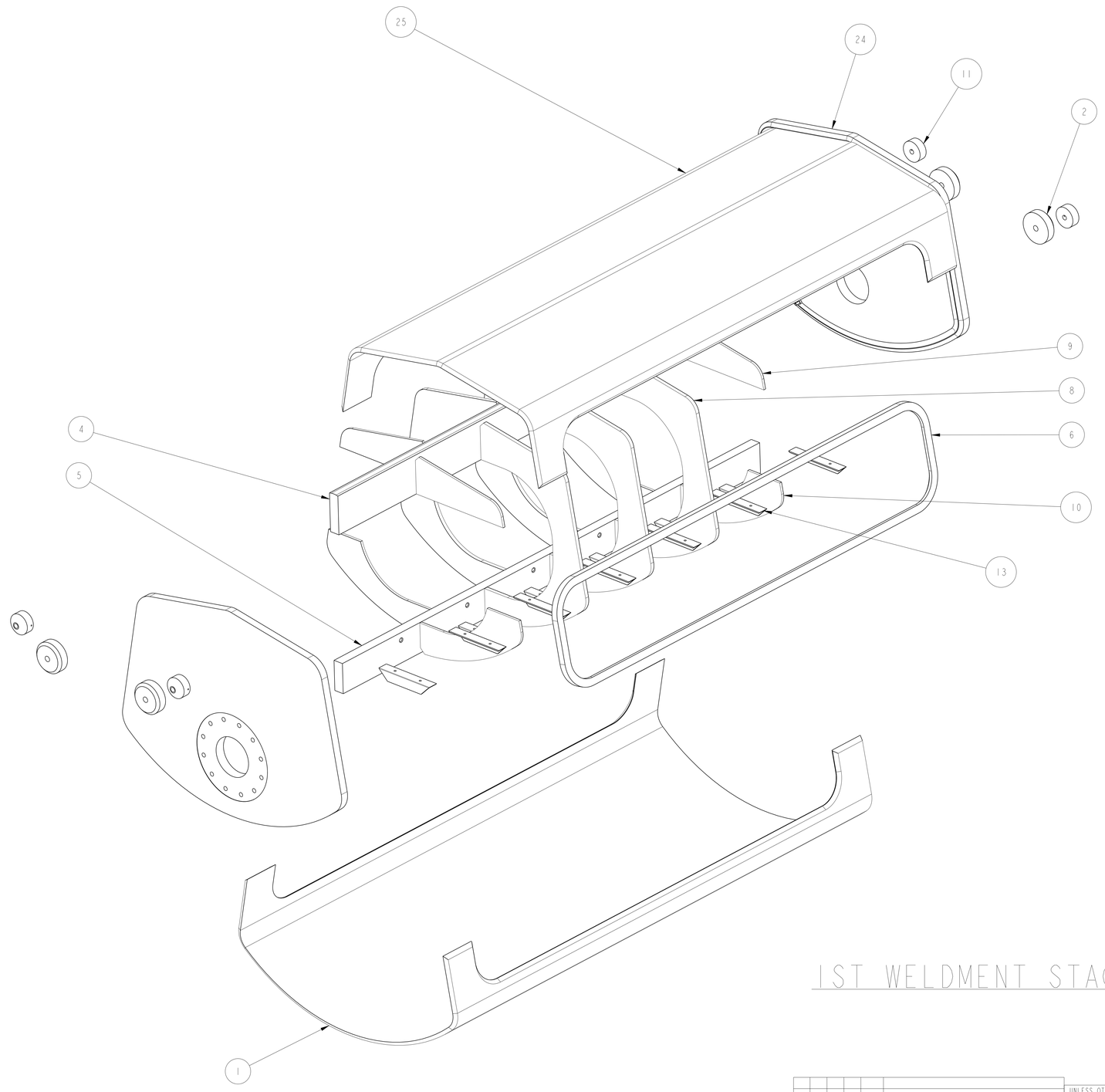

1ST WELDMENT STAGE

NOTES: UNLESS OTHERWISE SPECIFIED,

1. DIMENSIONS AND TOLERANCING PER ANSI Y14.5M-1982 UNITS ARE IN INCHES UNLESS OTHERWISE SPECIFIED.
2. USE OF SULFUR OR SILICONE BEARING OILS, LUBRICANTS, OR COOLANTS ARE STRICTLY PROHIBITED
3. USE OF RESIN OR RUBBER BONDED ADRASIVES UNDER POWER IS STRICTLY PROHIBITED. USE VITREOUS BONDED ABRASIVES ONLY.
4. CLEAN AFTER MACHINING PER VENDOR SPECIFICATION; SUBJECT TO LBNL APPROVAL.
5. VENDOR SUGGESTED CHANGES TO WELD PREPS; SUBJECT TO LBNL APPROVAL.
6. PROTECT FINISHED PART BY BAGGING OR SIMILAR METHOD TO PROTECT AND MAINTAIN CLEANLINESS DURING SHIPMENT AND STORAGE.
7. VENDOR SUGGESTED CHANGES TO TOLERANCES TO FACILITATE ASSEMBLY; SUBJECT TO LBNL APPROVAL
8. OPERATING CONDITIONS, 4.2k, 70 psig (4.4bar) TEST PRESSURE.
9. ESTIMATED WEIGHT: 768 LBS.
10. TACK WELD APPROPRIATE WELD BACKING STRIPS AROUND ENTIRE PERIMETER OF VESSEL OPENING. COVER SHOWN IN DRAWING 25M8026 WILL BE WELDED INTO OPENING DURING A LATER STEP PER DRAWING 24C3526.
11. TOOLING ITEM NOT SHOWN

ITEM	PART NO	REQD	DESCRIPTION	MATERIAL
32	25M969	1	THERMOMETER MOUNTING PAD	CDA 10100
31	251900	2	TANK SUPPORT BRACKET	SS 304L
30	25M813	2	CLAMP COVER 1"	OFHC, C101
29	251667	1	PUSH BLOCK	ALUM 6061
28	-	8	SCH, M5X.8, 12LG, SILVER PLATED	SS 18-8
27	-	8	LOCK WASHER, M5	SS
26	251110	10	LIQUID HELIUM TANK, WELDMENT RING	304L SS
25	251105	1	LIQUID HELIUM TANK, UPPER SHELL	304L SS
24	251115	2	LIQUID HELIUM TANK, END PLATE (1 PORT)	304L SS
23	251909	1	LIQUID HELIUM PORT STUB	304L SS
22	251908	1	CHECK VALVE STUB	304L SS
21	251907	1	RELIEF PORT PIPE STUB	304L SS
20	251899	2	PIPING SUPPORT PAD	SS 304L
19	251687	1	CABLE LOOM BASE-B ASSEMBLY	-
18	-	2	COPPER BRAID, 1" X 1/8"	-
17	251688	2	CABLE LOOM BASE ASSEMBLY	-
16	251685	2	HTS SOLDER JOINT ASSEMBLY-10	-
15	251669	2	HTS SOLDER JOINT ASSEMBLY-8	-
14	251689	3	CABLE LOOM BASE-A ASSEMBLY	-
13	251665	12	SOLDER BOX GUSSET	SS
12	25M900	2	CLAMP BASE PLATE	CDA 101
11	25M860	4	TANK SUPPORT BOSS	304L SS
10	251109	4	LIQUID HELIUM TANK, HALF RIB, LOWER	304L SS
9	251108	4	LIQUID HELIUM TANK , UPPER HALF RIB	SS 304L
8	251107	5	LIQUID HELIUM TANK, FULL RIB	SS 304L
7	251457	2	HTS SOLDER ASSEMBLY-8A	-
6	251104	1	LIQUID HELIUM TANK, PORT FRAME	SS 304L
5	251103	1	LIQUID HELIUM TANK, HORIZONTAL LOWER RIB	SS 304L
4	251102	1	LIQUID HELIUM TANK, , HORIZONTAL UPPER RIB	SS 304L
2	251898	4	LIFTING PAD	SS 304L
1	251106	1	LIQUID HELIUM TANK, LOWER SHELL,	304L SS

THIRD ANGLE PROJECTION

REV	DWG	CHK	ZONE	DATE	CHANGES
C	RLM	JPZ		6/23/03	ADDED 25M969 THERMOMETER MOUNTING PAD DELETED REDUNDANT DIMENSION
B	RLM	JPZ		6/9/03	HOLE Ø.485 WAS Ø.640; VIEWS CORRECTED
A	MJK	DPO		10/8/02	INITIAL RELEASE

UNLESS OTHERWISE SPECIFIED
TOLERANCES: X.X ± 0.1 FRAC. ± 1/64; X.XX ± 0.03 Angles ± 1.00°; X.XXX ± 0.010 FINISH 125 µin
DO NOT SCALE PRINT
THREADS ARE CLASS 2
CHAMFER ENDS OF ALL SCREW THREADS 30°
CUT ROUND, 1.5 THREAD RELIEF ON MACHINED THREADS
BREAK EDGES .016 MAX. ON MACHINED WORK
REMOVE BURRS, WELD SPLATTER & LOOSE SCALE
IN ACCORDANCE WITH ASME Y14.5M & B46.1

SHOP ORDERS
SER NO. -
ACCT NO. / NO. REQD
DATE ISSD
SEL TO
DATE REQD
SURFACE TREATMT -
IDENT METHOD TAG
PROJECT NUMBER N/A
PROJECT NAME N/A
DWN BY KNOLLS DATE 18-Jan-02
CHK BY Jon Zbasnik DATE 04-APR-02
APP BY Jon Zbasnik DATE 04-APR-02

ERNEST ORLANDO LAWRENCE BERKELEY NATIONAL LABORATORY
UNIVERSITY OF CALIFORNIA - BERKELEY

LHC IR FEEDBOX
CRYOGENICS
LIQUID HELIUM TANK - 10 PORT RIGHT

MICROFILMED: | PATENT CLEAR: | DWG. TYPE ASSEM | DESIGN ACCT. NO. Z5LCE2 | SHOWN ON | CATEGORY CODE LH2003 | SCALE: 1/4 | DO NOT SCALE PRINTS | SHEET 1 OF 4 | DWG. NO. 25I5736 | SIZE | REV. C

DWG. NO. 25I5736 SIZE C REV 1

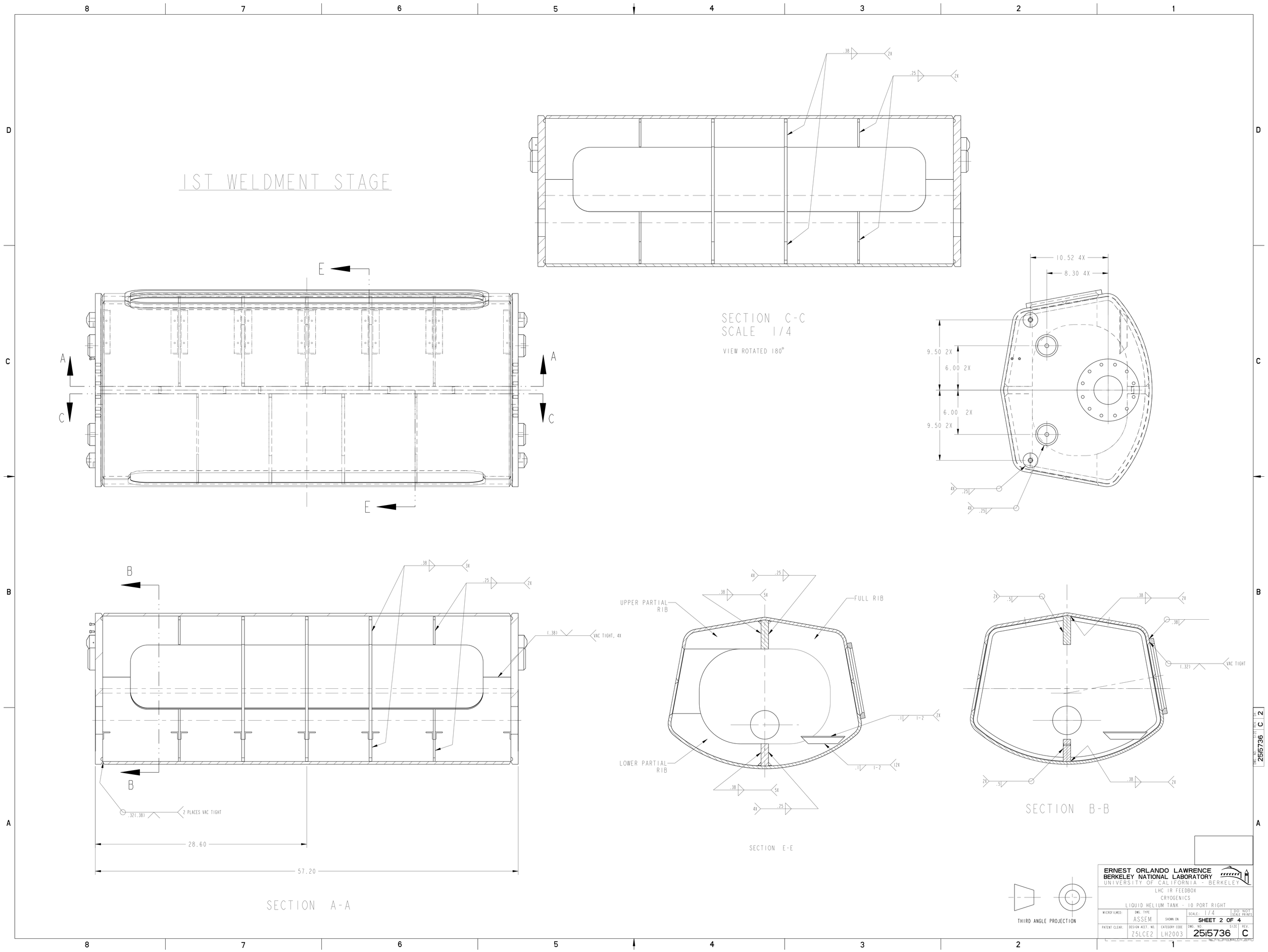

1ST WELDMENT STAGE
SECTION C-C
SCALE 1/4
VIEW ROTATED 180°
10.52 4X
8.30 4X
9.50 2X
6.00 2X
6.00 2X
9.50 2X
SECTION A-A
28.60
57.20
2 PLACES VAC TIGHT
VAC TIGHT, 4X
SECTION E-E
UPPER PARTIAL RIB
FULL RIB
LOWER PARTIAL RIB
SECTION B-B
VAC TIGHT
THIRD ANGLE PROJECTION
ERNEST ORLANDO LAWRENCE
BERKELEY NATIONAL LABORATORY
UNIVERSITY OF CALIFORNIA - BERKELEY
LHC IR FEEDBOX
CRYOGENICS
LIQUID HELIUM TANK - 10 PORT RIGHT
MICROFILMED:
DWG. TYPE
ASSEM
SHOWN ON
SCALE: 1/4
DO NOT SCALE PRINTS
SHEET 2 OF 4
PATENT CLEAR:
DESIGN ACCT. NO.
Z5LCE2
CATEGORY CODE
LH2003
DWG. NO.
25i5736
SIZE
REV.
C

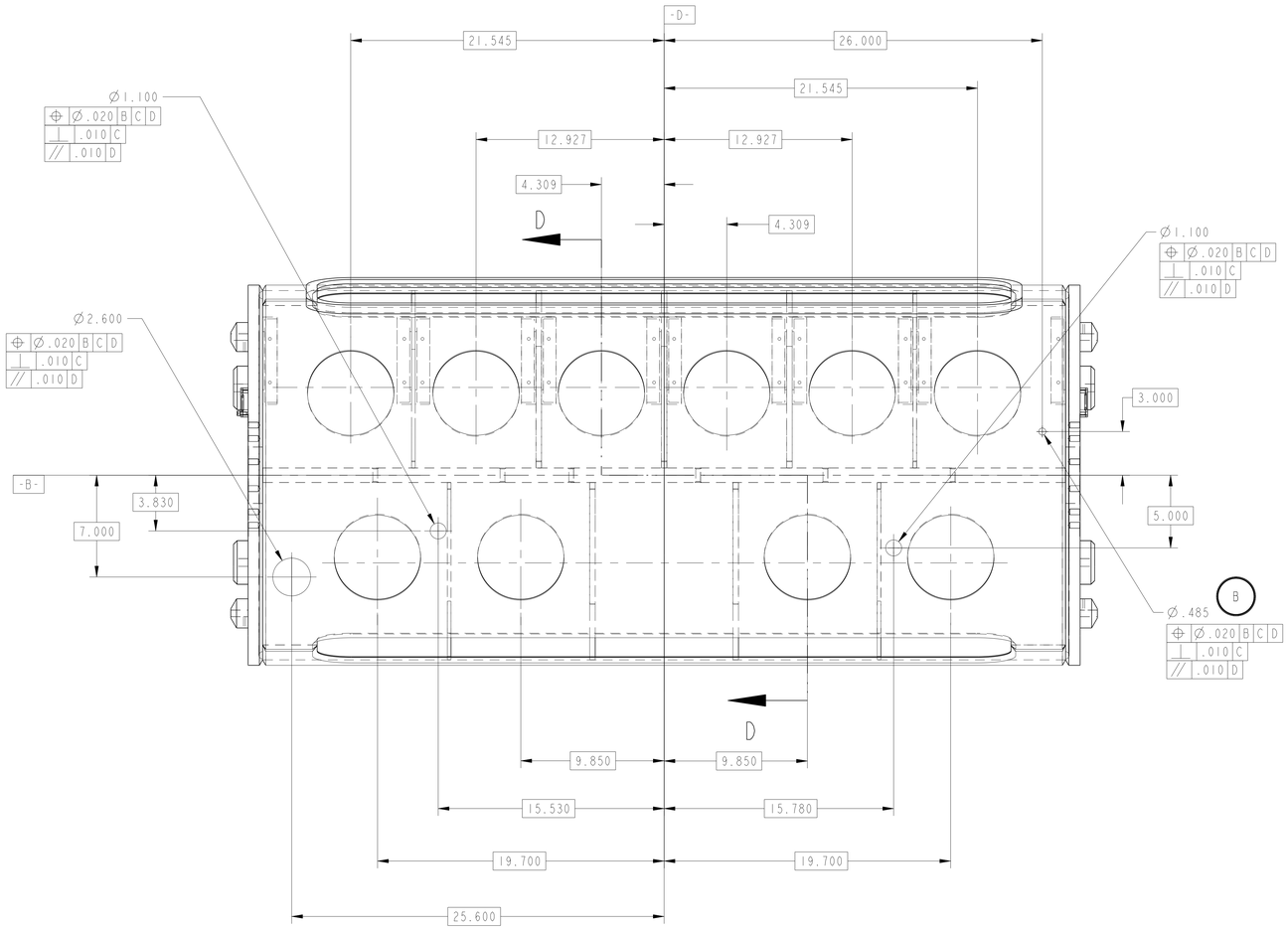

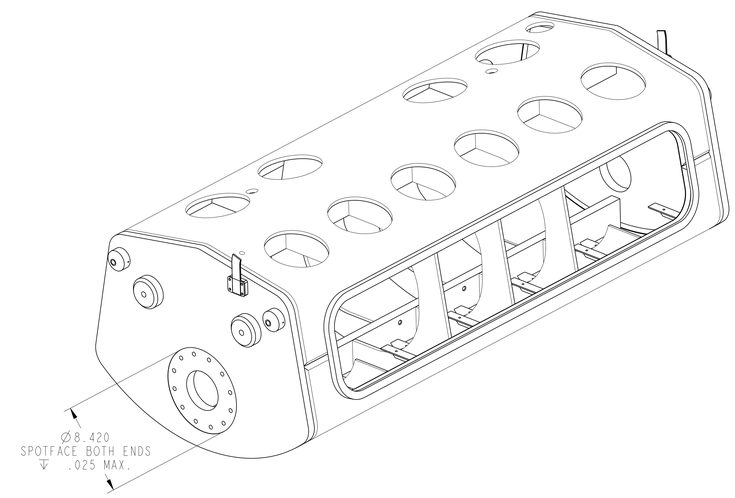

MACHINED STAGE

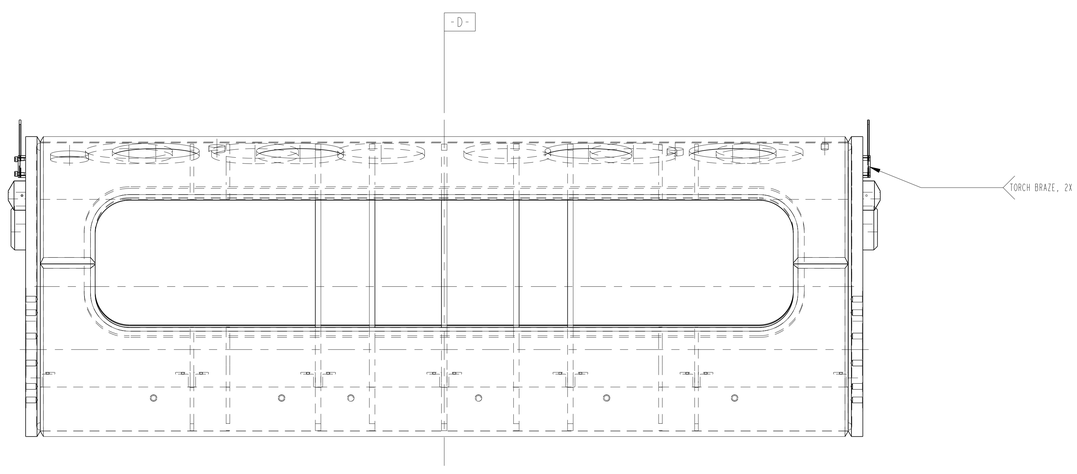

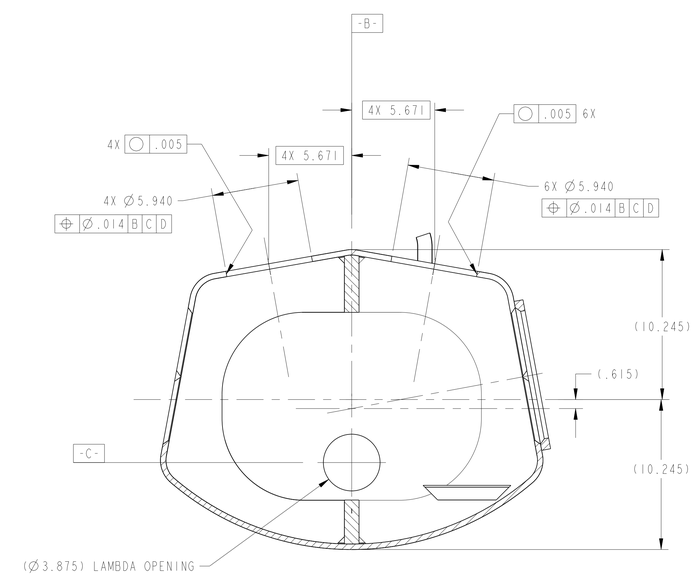

SECTION D-D

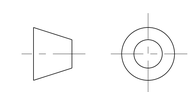

THIRD ANGLE PROJECTION

ERNEST ORLANDO LAWRENCE
BERKELEY NATIONAL LABORATORY
UNIVERSITY OF CALIFORNIA - BERKELEY

LHC IR FEEDBOX
CRYOGENICS
LIQUID HELIUM TANK - 10 PORT RIGHT

MICROFILMED:	DWG. TYPE ASSEM	SHOWN ON	SCALE: 1/4	DO NOT SCALE PRINTS
			SHEET 3 OF 4	
PATENT CLEAR:	DESIGN ACCT. NO. Z5LCE2	CATEGORY CODE LH2003	DWG. NO. 25i5736	SIZE REV. C

DWG. NO. 25i5736 SIZE C REV. 3

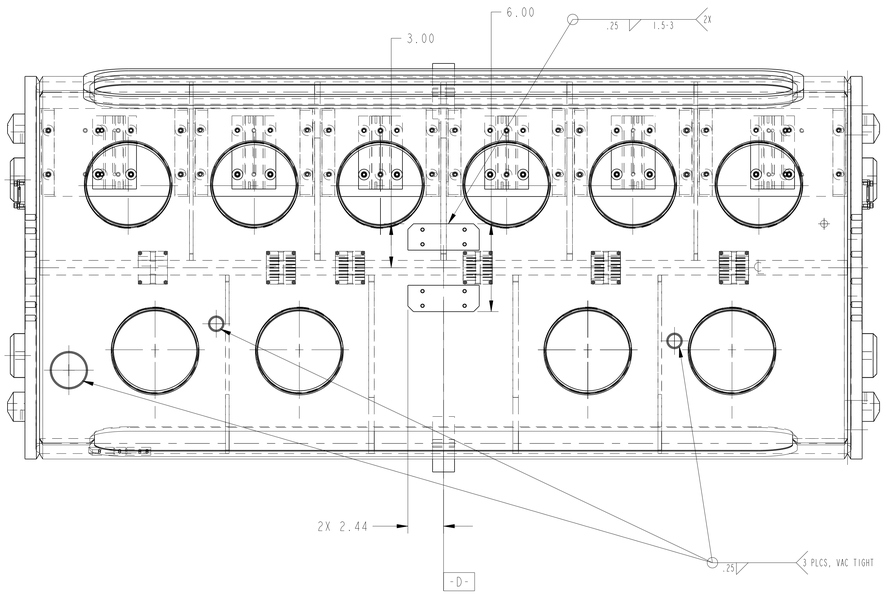

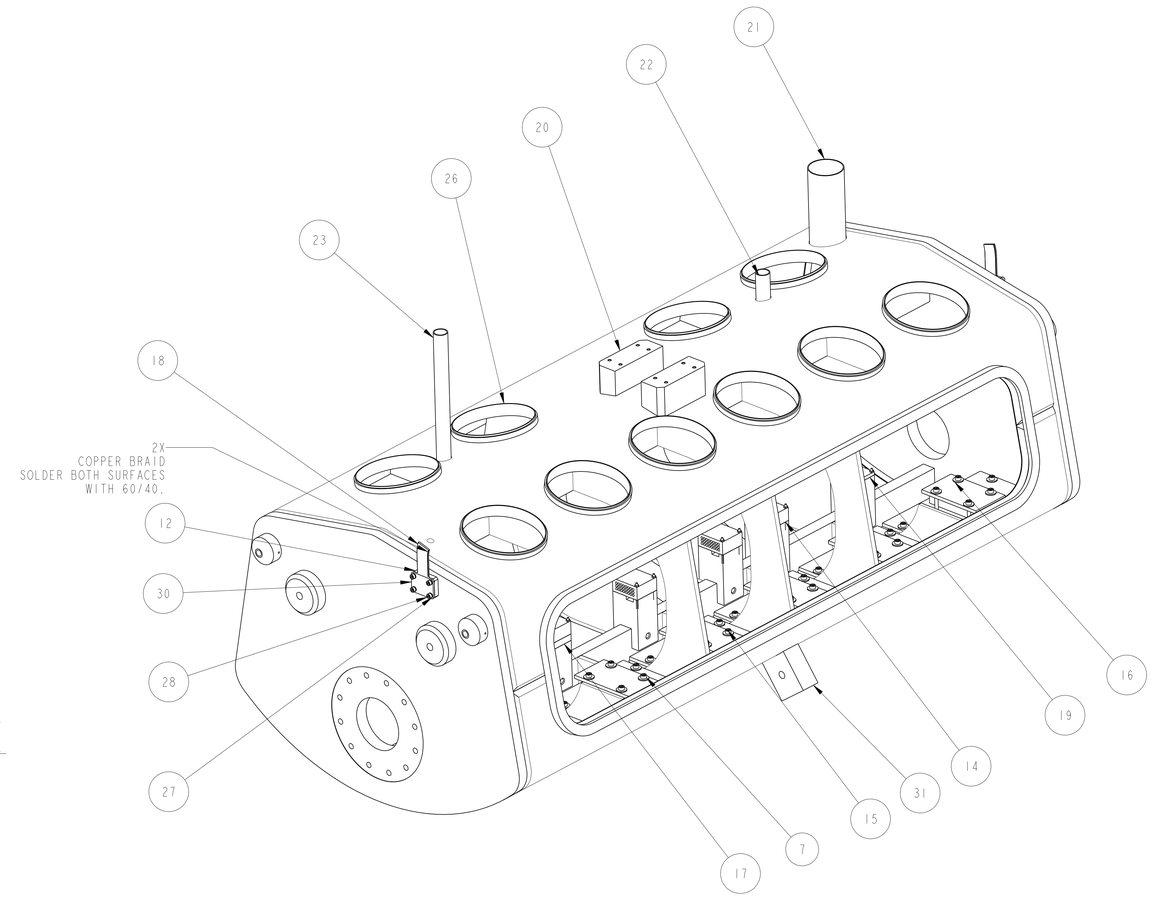

FINAL WELDMENT & ASSEMBLY STAGE

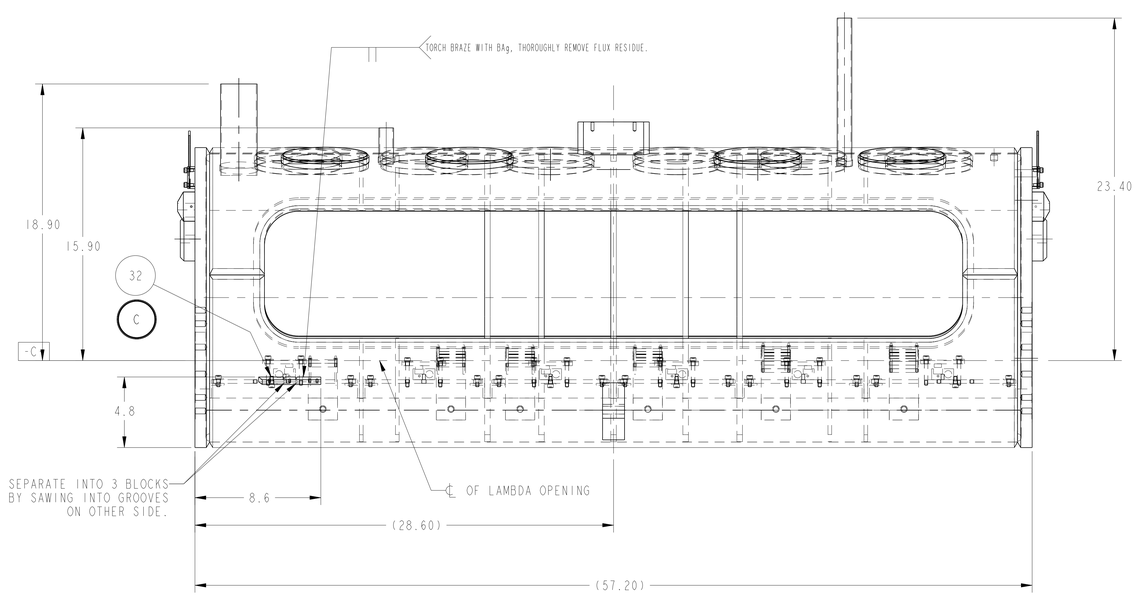

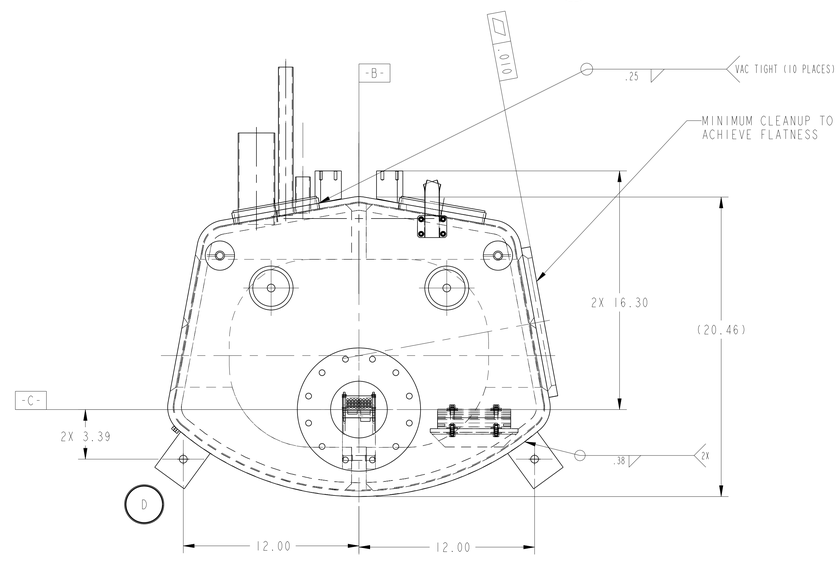

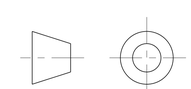

THIRD ANGLE PROJECTION

ERNEST ORLANDO LAWRENCE
BERKELEY NATIONAL LABORATORY
UNIVERSITY OF CALIFORNIA - BERKELEY

LHC IR FEEDBOX
CRYOGENICS
LIQUID HELIUM TANK - 10 PORT RIGHT

MICROFILMED:	DWG. TYPE ASSEM	SHOWN ON	SCALE: 1/4	DO NOT SCALE PRINTS
			SHEET 4 OF 4	
PATENT CLEAR:	DESIGN ACCT. NO. Z5LCE2	CATEGORY CODE LH2003	DWG. NO. 25i5736	SIZE C REV.

DWG. NO. 25i5736 SIZE C REV. 4