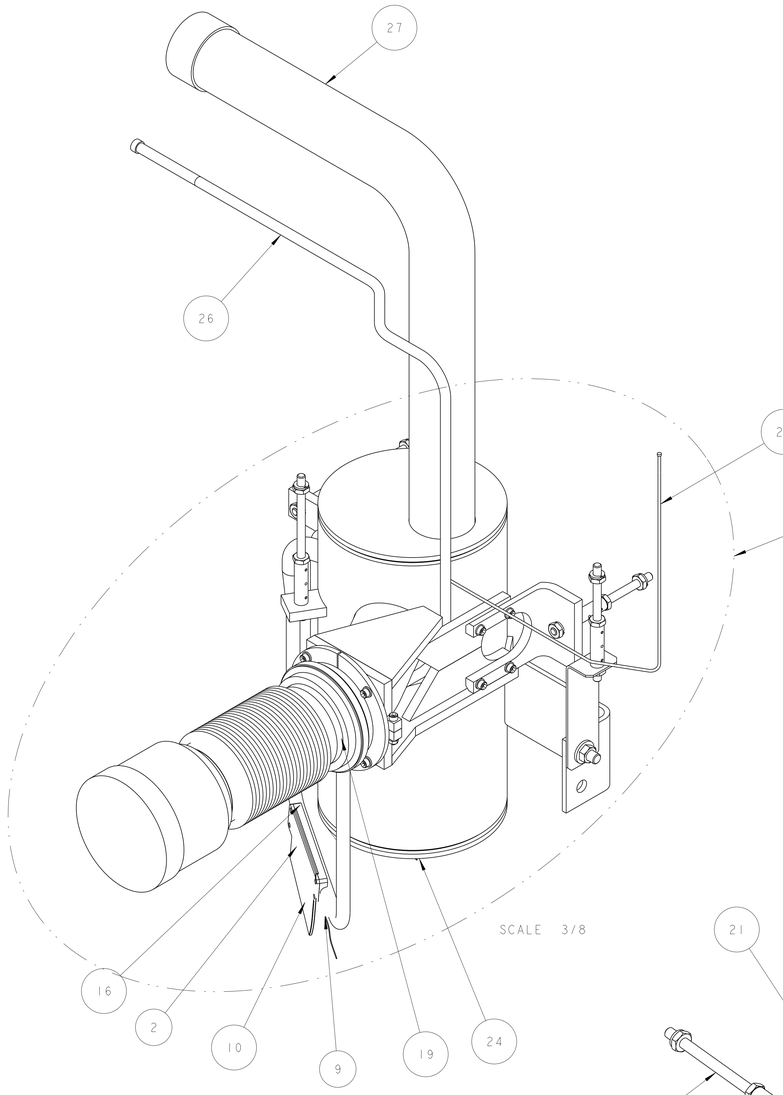

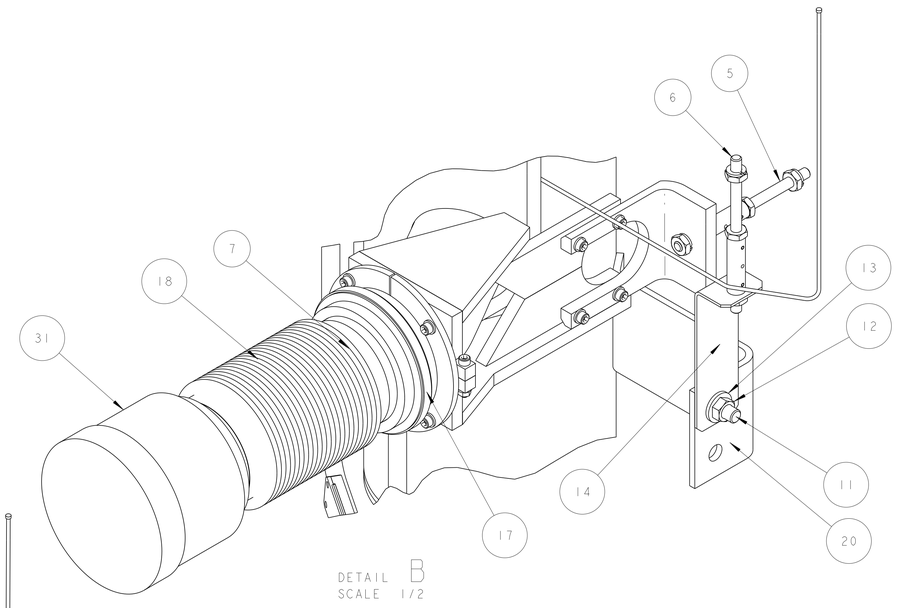

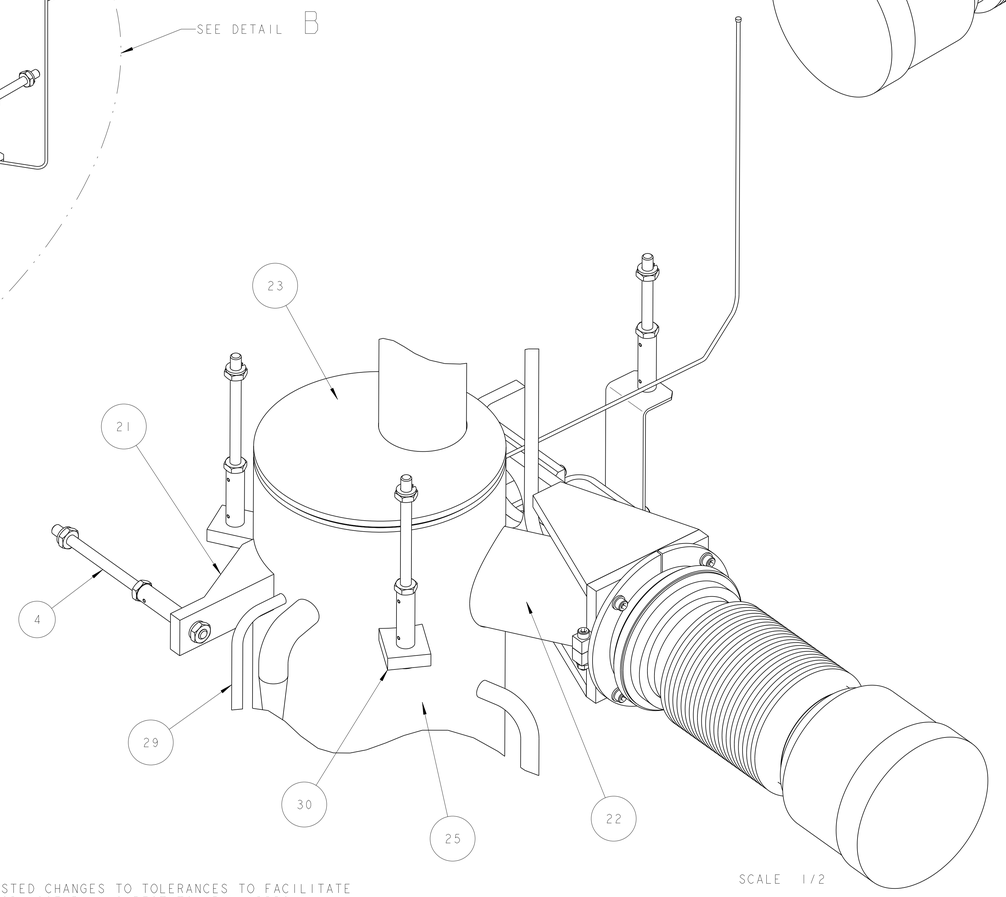

NOTES: (UNLESS OTHERWISE SPECIFIED)

1. THIS IS A CRYOGENIC VACUUM COMPONENT.
2. WELDING PROCEDURE: PER VENDOR SPECIFICATION WITH LBNL APPROVAL.
3. CLEANING PROCEDURE : PER VENDOR SPECIFICATION WITH LBNL APPROVAL.
4. PACKAGING AND STORAGE PROCEDURE OF THE COMPONENTS: PER VENDOR SPECIFICATION WITH LBNL APPROVAL.
5. DIMENSIONS AND TOLERANCING PER ANSI Y14.5M-1982. UNITS ARE IN INCHES [mm] UNLESS OTHERWISE SPECIFIED.
6. USE OF SULFUR OR SILICONE BEARING OILS, LUBRICANTS, OR COOLANTS ARE STRICTLY PROHIBITED.
7. USE OF RESIN OR RUBBER BONDED ABRASIVES UNDER POWER IS STRICTLY PROHIBITED. USE VITREOUS BONDED ABRASIVES ONLY.
8. VENDOR SUGGESTED CHANGES TO WELD PREPS; SUBJECT TO LBNL APPROVAL.
9. FITTINGS MAY BE USED IN PLACE OF BENDS; SUBJECT TO LBNL APPROVAL.
10. VENDOR SUGGESTED CHANGES TO TOLERANCES TO FACILITATE FABRICATION OR ASSEMBLY; SUBECT TO LBNL APPROVAL.
11. REMOVE ALL THE BURRS AND REAM THE ENDS FOR CIRCULARITY AND CLEAN ENDS.
12. TUBE END SURFACE MUST BE PERPENDICULAR TO THE TUBE AXIS WITHIN +/-.010.
13. PERFORM ACCEPTANCE TESTS PER LBNL SPECIFICATION M989.
14. A MARK DESIGNATING THE INSTALLED LENGTH WILL BE UTILIZED DURING FINAL INSTALLATION OF THE FEEDBOX ASSEMBLY. MARK, SCRIBE OR ETCH THIS LOCATION IN A PERMANENT MANNER, SUBJECT TO LBNL APPROVAL, TO AN ACCURACY OF ±0.063".
15. PROVIDE A MINIMUM LENGTH OF 4.0" OF STRAIGHT, SMOOTH PIPE ON THE INDICATED SIDE OF THE INSTALLED LENGTH MARK FOR PIPE WELDING DURING FINAL INSTALLATION OF THE FEEDBOX ASSEMBLY.
16. PIPE MUST BE STRAIGHT AND SMOOTH (NO BUMPS) FOR 0.5" ON EITHER SIDE OF THE CENTER-PLANE OF THE SUPPORT.
17. CAP BOTH ENDS OF PIPE TO FACILITATE ACCEPTANCE TESTS.
18. INSTALL TEMPERATURE SENSOR PER LHC SPECIFICATION LHC-QIT-ES-0002. SENSOR TO BE PROVIDED BY LBNL.

THIRD ANGLE PROJECTION

ITEM	PART NO	REQD	DESCRIPTION	MATERIAL
31	-	1	PIPE, PER ASTM A312	SS 304L
30	251913	2	SUPPORT BRACKET, SURGE TANK	SS 304L
29	251840	1	HEATER TUBE	SS 304L
28	251551	1	TRANSDUCER TUBING	SS 304L
27	251549	1	PIPE, XB, SURGE TANK ATTACHMENT	SS 304L
26	251548	1	PIPE, CY1	SS 304L
25	251547	1	SURGE TANK BODY	SS 304L
24	251358	1	SURGE TANK BOTTOM	SS 304L
23	251357	1	SURGE TANK TOP	SS 304L
22	251220	1	PIPE, XB, SURGE TANK ATTACHMENT	SS 304L
21	25M821	1	XB BELLOWS SUPPORT BRACKET	SS 304L
20	25M928	1	XB VERTICAL SUPORT BRACKET	SS 304L
19	25M862	1	WELD BRACKET	SS 304L
18	251314	1	BELLOWS, FNAL# 5520-MD-390065	SS 300 SERIES
17	251306	1	FLANGE, FNAL# 5520-MC-390032	SS 300 SERIES
16	25M877	1	CLAMP BASE PLATE, 5/8 TUBE X 5.00 "	OFHC C101
15	251426	1	CLAMP BASE PLATE	OFHC C101
14	25M926	1	XB HANGER, ANGLE PLATE	304 SS
13	-	1	1/2" FLAT WASHER	18-8 SS
12	-	1	1/2" HEX NUT	18-8 SS
11	-	1	HEX HD BOLT, 1/2-13 X 1-1/4 LG	18-8 SS
10	-	1	STANDARD BRAIDED COPPER CABLE 4"	-
9	-	1	CERNOX, TEMP SENSOR	-
8	-	1	CERNOX, TEMP SENSOR	-
7	25M863	1	XB BELLOWS SUPPORT BRACKET	-
6	25M810	1	THRUST SUPPORT WITH THERMAL BREAK	-
5	25M810	1	THRUST SUPPORT WITH THERMAL BREAK	-
4	25H413	3	THRUST SUPPORT WITH THERMAL BREAK	-
3	-	1	WELD RING, ID 134mm, FNAL SUPPLIED	-
2	25M814	1	CLAMP COVER 4"	OFHC, C101
1	25M813	1	CLAMP COVER 1"	OFHC, C101

REV	DWG	CHK	ZONE	DATE	CHANGES
A	ARH	DPO		9-16-02	INITIAL RELEASE

UNLESS OTHERWISE SPECIFIED
TOLERANCES: X.X ± 0.1 FRAC. ± 1/64; X.XX ± 0.03 Angles ± 1.00°; X.XXX ± 0.010 FINISH 125 √
DO NOT SCALE PRINT
THREADS ARE CLASS 2.
CHAMFER ENDS OF ALL SCREW THEADS 30°
CUT ROUND, 1.5 THREAD RELIEF ON MACHINED THREADS
BREAK EDGES .015 MAX. ON MACHINED WORK
REMOVE BURRS, WELD SPLATTER & LOOSE SCALE
IN ACCORDANCE WITH ASME Y14.5M & B46.1

SHOP ORDERS
ACCT NO. / NO. REQD
DEL TO
SERIAL NO. / DATE ISSD / DATE REQD
SURFACE TREATMT / IDENT METHOD / TAG
PROJECT NUMBER N/A
PROJECT NAME N/A
DWG BY KNOLLS DATE 07-Dec-01
CHK BY Jon Zbasnik DATE 4-02-02
APP BY Jon Zbasnik DATE 4-02-02

ERNEST ORLANDO LAWRENCE BERKELEY NATIONAL LABORATORY
UNIVERSITY OF CALIFORNIA : BERKELEY

LHC IR FEEDBOX
CRYOGENICS
PIPE, XB DFBXF

MICROFILMED: | DWG. TYPE: ASSEM | SHOWN ON: - | SCALE: 1/4 | DO NOT SCALE PRINTS
PATENT CLEAR: | DESIGN ACCT. NO.: Z5LCE2 | CATEGORY CODE: LH2003
SHEET 1 OF 3
DWG. NO. 25I5456 SIZE A REV.

DWG. NO. 25I5456 SHT. 1 REV. A

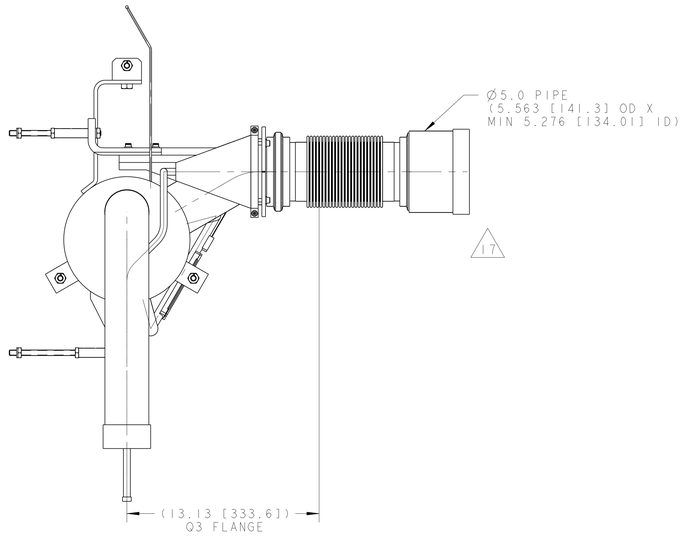

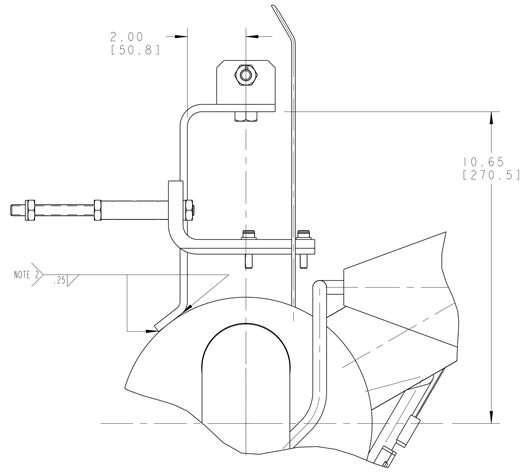

SCALE 1/2

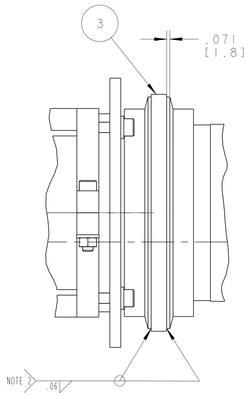

DETAIL B
SCALE 3/4

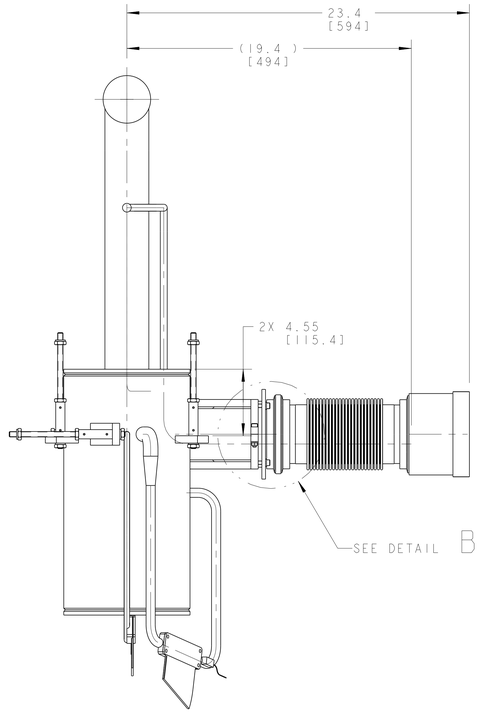

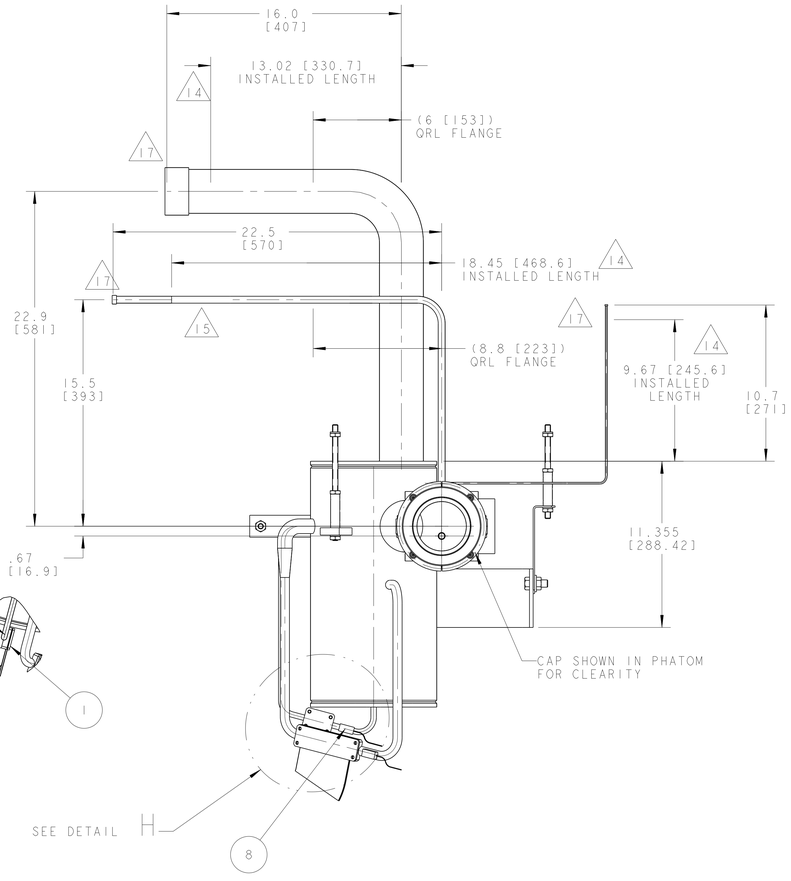

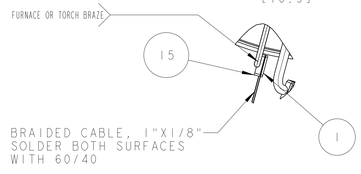

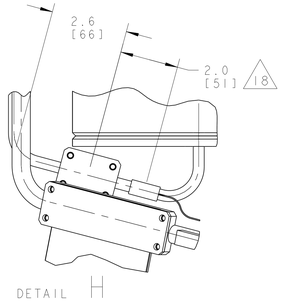

DETAIL H
SCALE 1/2

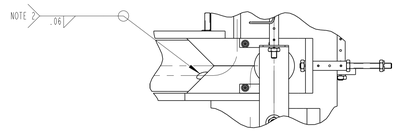

PARTIAL VIEW G - G

ERNEST ORLANDO LAWRENCE
BERKELEY NATIONAL LABORATORY
UNIVERSITY OF CALIFORNIA - BERKELEY

LHC IR FEEDBOX
CRYOGENICS
PIPE, XB DFBXF

MICROFILMED:	DWG. TYPE	SHOWN ON	SCALE: 1/4	DO NOT SCALE PRINTS
	ASSEM	-	SHEET 2 OF 3	
PATENT CLEAR:	DESIGN ACCT. NO.	CATEGORY CODE	DWG. NO.	SIZE / REV.
	Z5LCE2	LH2003	2515456	A

DWG. NO. 2515456 | SIZE | A | 2

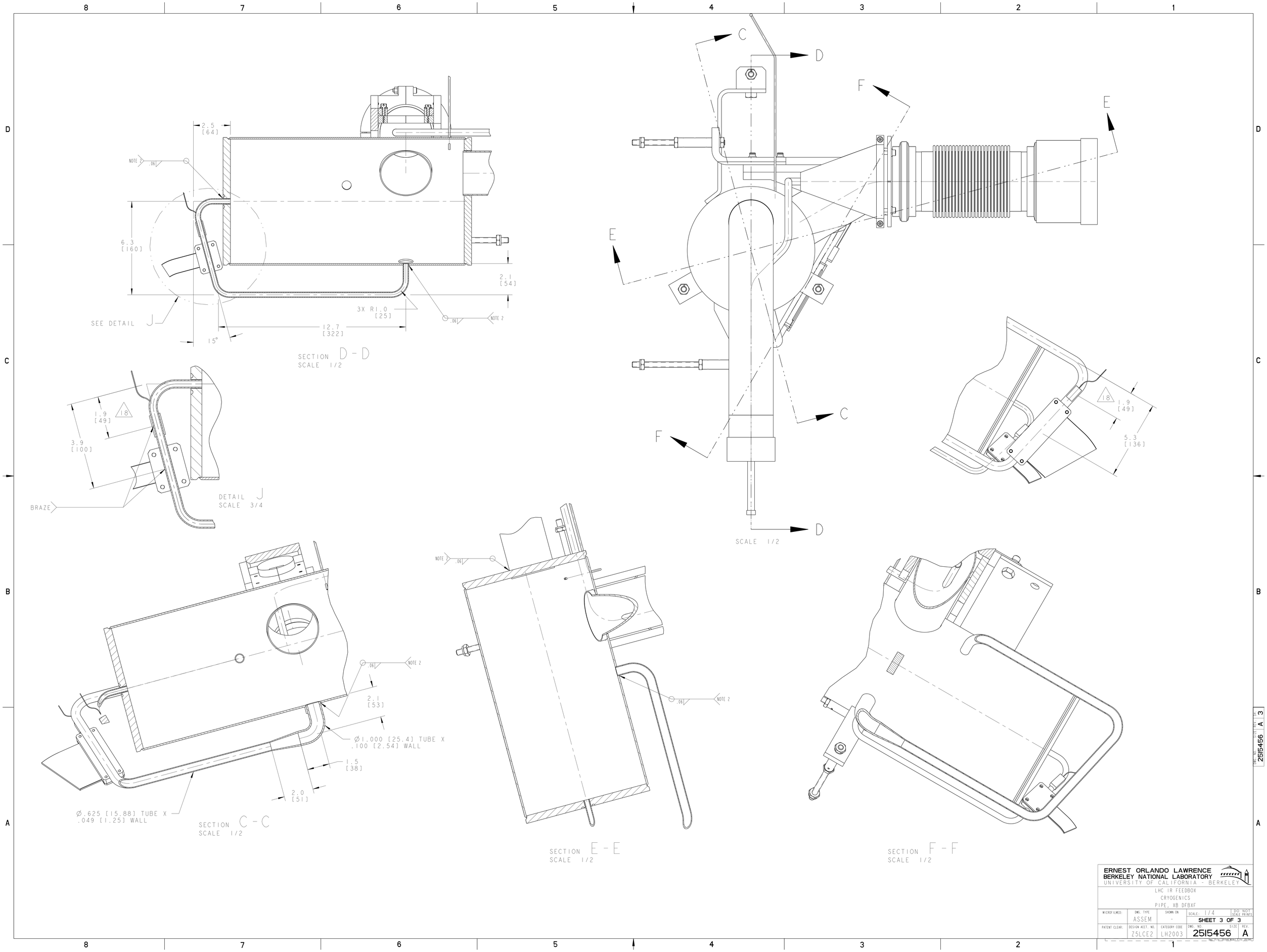

ERNEST ORLANDO LAWRENCE
BERKELEY NATIONAL LABORATORY
UNIVERSITY OF CALIFORNIA - BERKELEY

LHC IR FEEDBOX
CRYOGENICS
PIPE, XB DFBXF

MICROFILMED:	DWG. TYPE	SHOWN ON	SCALE: 1/4	DO NOT SCALE PRINTS
	ASSEM	-	SHEET 3 OF 3	
PATENT CLEAR:	DESIGN ACCT. NO.	CATEGORY CODE	DWG. NO.	SIZE / REV.
	Z5LCE2	LH2003	2515456	A

DWG. NO. 2515456 | SIZE A | REV. 3