DESCRIPTION	MATERIAL	MAT. LOCATION
ROUND, PER ASTM A479	SS 316L	-

B

NOTES: (UNLESS OTHERWISE SPECIFIED)

1. THIS IS A CRYOGENIC VACUUM COMPONENT.
2. CLEAN AND DEGREASE AFTER MACHINING. B
3. BAG AND TAG WITH 251534.
4. PACKAGING AND STORAGE PROCEDURE OF THE COMPONENTS: PER VENDOR SPCIFICATION WITH LBNL APPROVAL.
5. DIMENSIONS AND TOLERANCING PER ANSI Y14.5M-1982. UNITS ARE IN INCHES [mm] UNLESS OTHERWISE SPECIFIED.
6. USE OF SULFUR OR SILICONE BEARING OILS, LUBRICANTS, OR COOLANTS ARE STRICTLY PROHIBITED.
7. USE OF RESIN OR RUBBER BONDED ABRASIVES UNDER POWER IS STRICTLY PROHIBITED. USE VITREOUS BONDED ABRASIVES ONLY.

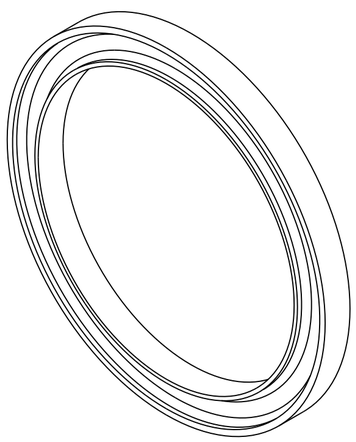

SCALE 1/1

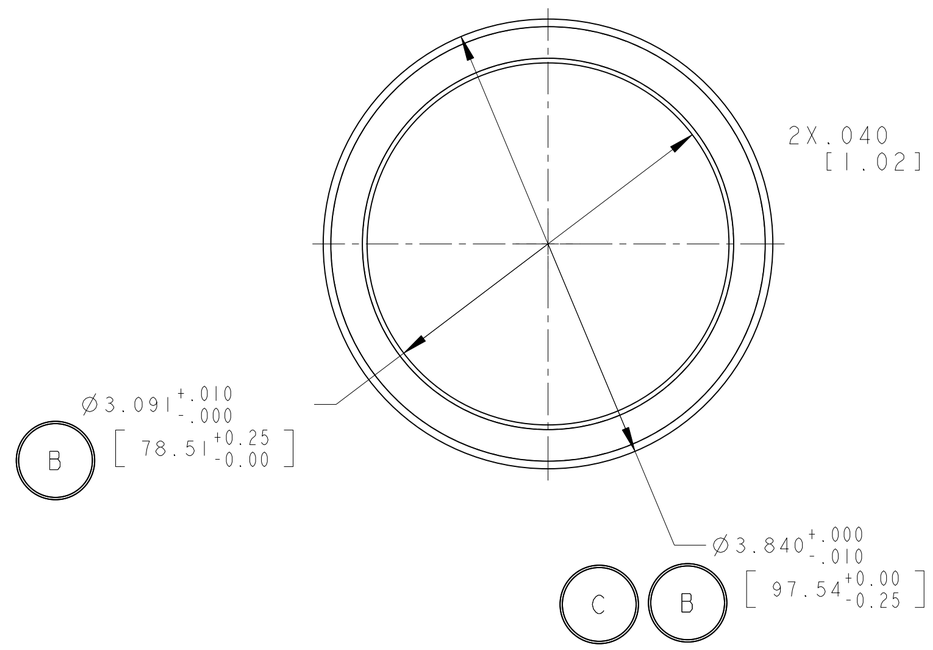

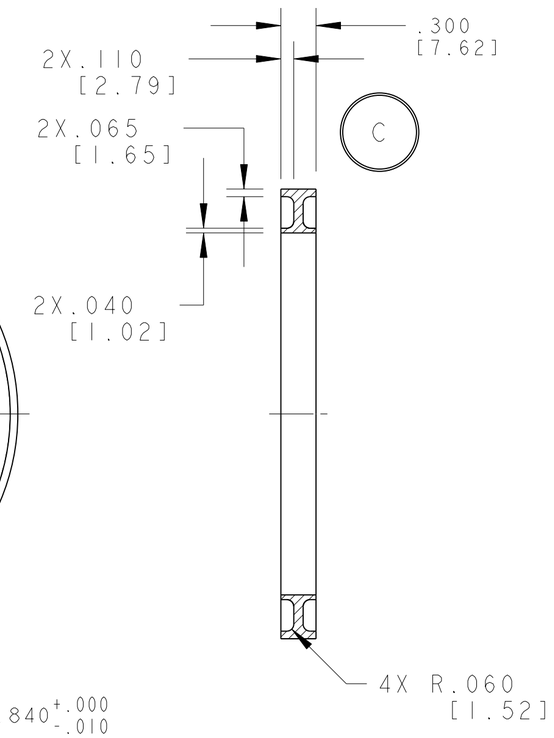

THIRD ANGLE PROJECTION

REV	DWG	CHK	ZONE	DATE	CHANGES
C	RLM	JPZ		6/23/03	Ø3.840 WAS Ø3.845; REDESIGNED RING SECTION
B	RLM	JPZ		1/23/03	ADDED TOLS TO ID AND OD, MAT FROM 304L TO 316L NOTE CHANGES.
A	ARH	DPO		9/19/02	INITIAL RELEASE

UNLESS OTHERWISE SPECIFIED

TOLERANCES	
X.X ± 0.1	FRAC. ± 1/64
X.XX ± 0.03	Angles ± 1.00°
X.XXX ± 0.010	FINISH 125 √(µin)

DO NOT SCALE PRINT

THREADS ARE CLASS 2
CHAMFER ENDS OF ALL SCREW TREADS 30°
CUT ROUND, 1.5 THREAD RELIEF ON MACHINED THREADS
BREAK EDGES .016 MAX. ON MACHINED WORK
REMOVE BURRS, WELD SPLATTER & LOOSE SCALE
IN ACCORDANCE WITH ASME Y14.5M & B46.1

SHOP ORDERS

ACCT NO.	NO. REQD	SER NO.	-
DEL TO		DATE ISSD	-
SURFACE TREATMT	-	DATE REQD	-
IDENT METHOD	TAG		
PROJECT NUMBER	N/A	(logo)	
PROJECT NAME			
DWG BY	KNOLLS	DATE	29-Jul-02
CHK BY	Jon Zbasnik	DATE	29-JUL-02
APR BY	Jon Zbasnik	DATE	29-JUL-02

ERNEST ORLANDO LAWRENCE
BERKELEY NATIONAL LABORATORY
UNIVERSITY OF CALIFORNIA - BERKELEY

LHC IR FEEDBOX
CRYOGENICS
JACKET WELD CAP

MICROFILMED:	DWG. TYPE	SHOWN ON	SCALE: 1/1	DO NOT SCALE PRINTS
	PART	-	SHEET 1 OF 1	
PATENT CLEAR:	DESIGN ACCT. NO.	CATEGORY CODE	DWG. NO.	SIZE / REV.
	Z5LCE2	LH2003	2515343	C

DWG. NO. 2515343 SIZE C REV. SH. 1

Dwg. File: 251534 Model File: 251534

Rev. 1/29/2000 J. C. Odwyer