| DESCRIPTION | MATERIAL | MAT. LOCATION |
|---|---|---|
| ROUND, PER ASTM A479 | SS 316L | - |

B

NOTES: (UNLESS OTHERWISE SPECIFIED)

1. THIS IS A CRYOGENIC VACUUM COMPONENT.
2. CLEAN AND DEGREASE AFTER MACHINING. B
3. BAG AND TAG WITH 251534.
4. PACKAGING AND STORAGE PROCEDURE OF THE COMPONENTS: PER VENDOR SPCIFICATION WITH LBNL APPROVAL.
5. DIMENSIONS AND TOLERANCING PER ANSI Y14.5M-1982. UNITS ARE IN INCHES [mm] UNLESS OTHERWISE SPECIFIED.
6. USE OF SULFUR OR SILICONE BEARING OILS, LUBRICANTS, OR COOLANTS ARE STRICTLY PROHIBITED.
7. USE OF RESIN OR RUBBER BONDED ABRASIVES UNDER POWER IS STRICTLY PROHIBITED. USE VITREOUS BONDED ABRASIVES ONLY.

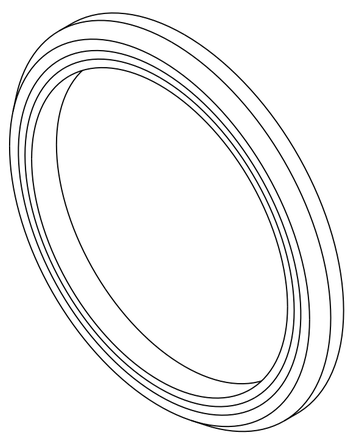

SCALE 1/1

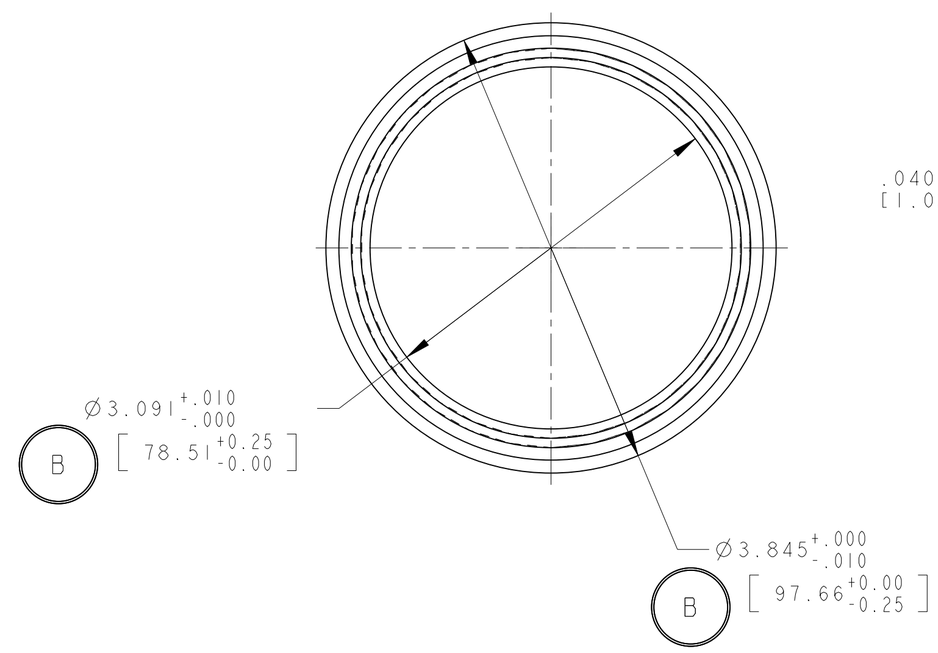


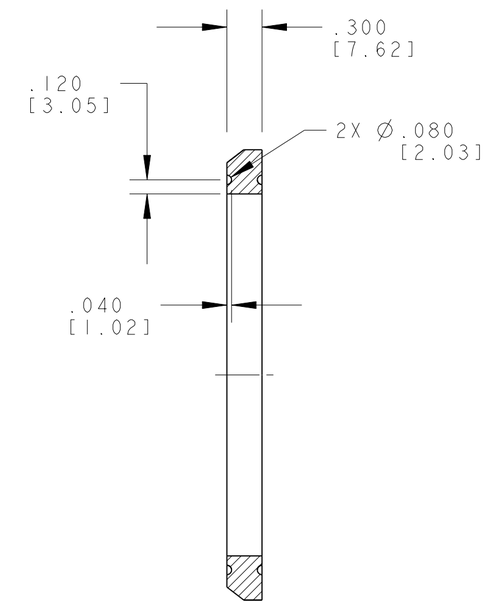


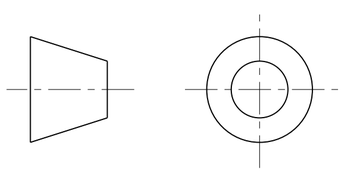

THIRD ANGLE PROJECTION

| REV | DWG | CHK | ZONE | DATE | CHANGES |
|---|---|---|---|---|---|
| B | RLM | JPZ | | 1/23/03 | ADDED TOLS TO ID AND OD, MAT FROM 304L TO 316L NOTE CHANGES. |
| A | ARH | DPO | | 9/19/02 | INITIAL RELEASE |

UNLESS OTHERWISE SPECIFIED

| TOLERANCES | | |
|---|---|---|
| | X.X ± 0.1 | FRAC. ± 1/64 |
| | X.XX ± 0.03 | Angles ± 1.00° |
| | X.XXX ± 0.010 | FINISH 125√(μin) |

DO NOT SCALE PRINT

THREADS ARE CLASS 2
CHAMFER ENDS OF ALL SCREW TREADS 30°
CUT ROUND, 1.5 THREAD RELIEF ON MACHINED THREADS
BREAK EDGES .016 MAX. ON MACHINED WORK
REMOVE BURRS, WELD SPLATTER & LOOSE SCALE
IN ACCORDANCE WITH ASME Y14.5M & B46.1

SHOP ORDERS

| | | | |
|---|---|---|---|
| ACCT NO. | NO. REQD | SER NO. | - |
| DEL TO | | DATE ISSD | - |
| SURFACE TREATMT | - | DATE REQD | - |
| IDENT METHOD | TAG | | |
| PROJECT NUMBER | N/A | (logo) | |
| PROJECT NAME | | | |
| DWG BY | KNOLLS | DATE | 29-Jul-02 |
| CHK BY | Jon Zbasnik | DATE | 29-JUL-02 |
| APR BY | Jon Zbasnik | DATE | 29-JUL-02 |

ERNEST ORLANDO LAWRENCE BERKELEY NATIONAL LABORATORY
UNIVERSITY OF CALIFORNIA - BERKELEY

LHC IR FEEDBOX
CRYOGENICS
JACKET WELD CAP

| MICROFILMED: | DWG. TYPE | SHOWN ON | SCALE: 1/1 | DO NOT SCALE PRINTS |
|---|---|---|---|---|
| | PART | - | SHEET 1 OF 1 | |
| PATENT CLEAR: | DESIGN ACCT. NO. | CATEGORY CODE | DWG. NO. SIZE | REV. |
| | Z5LCE2 | LH2003 | 2515343 | B |

DWG. NO. 2515343 SIZE B REV. SH. 1

Dwg. File: 251534 Model File: 251534

Rev. 1/29/2000 J. R. Osborn