NOTES: (UNLESS OTHERWISE SPECIFIED)

1. THIS IS A CRYOGENIC VACUUM COMPONENT.
2. WELDING PROCEDURE: PER VENDOR SPECIFICATION WITH LBNL APPROVAL.
3. CLEANING PROCEDURE : PER VENDOR SPECIFICATION WITH LBNL APPROVAL.
4. PACKAGING AND STORAGE PROCEDURE OF THE COMPONENTS: PER VENDOR SPECIFICATION WITH LBNL APPROVAL.
5. DIMENSIONS AND TOLERANCING PER ANSI Y14.5M-1982. UNITS ARE IN INCHES [mm] UNLESS OTHERWISE SPECIFIED.
6. USE OF SULFUR OR SILICONE BEARING OILS, LUBRICANTS, OR COOLANTS ARE STRICTLY PROHIBITED.
7. USE OF RESIN OR RUBBER BONDED ABRASIVES UNDER POWER IS STRICTLY PROHIBITED. USE VITREOUS BONDED ABRASIVES ONLY.
8. VENDOR SUGGESTED CHANGES TO WELD PREPS; SUBJECT TO LBNL APPROVAL.
9. FITTINGS MAY BE USED IN PLACE OF BENDS; SUBJECT TO LBNL APPROVAL.
10. VENDOR SUGGESTED CHANGES TO TOLERANCES TO FACILITATE FABRICATION OR ASSEMBLY; SUBECT TO LBNL APPROVAL.
11. REMOVE ALL THE BURRS AND REAM THE ENDS FOR CIRCULARITY AND CLEAN ENDS.
12. TUBE END SURFACE MUST BE PERPENDICULAR TO THE TUBE AXIS WITHIN +/-.010.
13. PERFORM ACCEPTANCE TESTS PER LBNL SPECIFICATION M989. B
14. A MARK DESIGNATING THE INSTALLED LENGTH WILL BE UTILIZED DURING FINAL INSTALLATION OF THE FEEDBOX ASSEMBLY. MARK, SCRIBE OR ETCH THIS LOCATION IN A PERMANENT MANNER, SUBJECT TO LBNL APPROVAL, TO AN ACCURACY OF ±0.063".
15. PROVIDE A MINIMUM LENGTH OF 4.0" OF STRAIGHT, SMOOTH PIPE ON THE INDICATED SIDE OF THE INSTALLED LENGTH MARK FOR PIPE WELDING DURING FINAL INSTALLATION OF THE FEEDBOX ASSEMBLY.
16. PIPE MUST BE STRAIGHT AND SMOOTH (NO BUMPS) FOR 1.5" ON EITHER SIDE OF THE CENTER-PLANE OF THE SUPPORT. B
17. CAP BOTH ENDS OF PIPE TO FACILITATE ACCEPTANCE TESTS. B

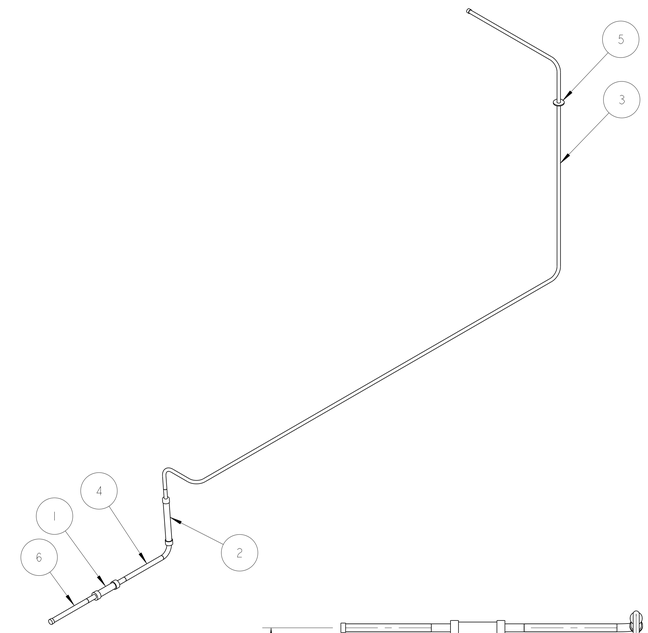

SCALE 1/8

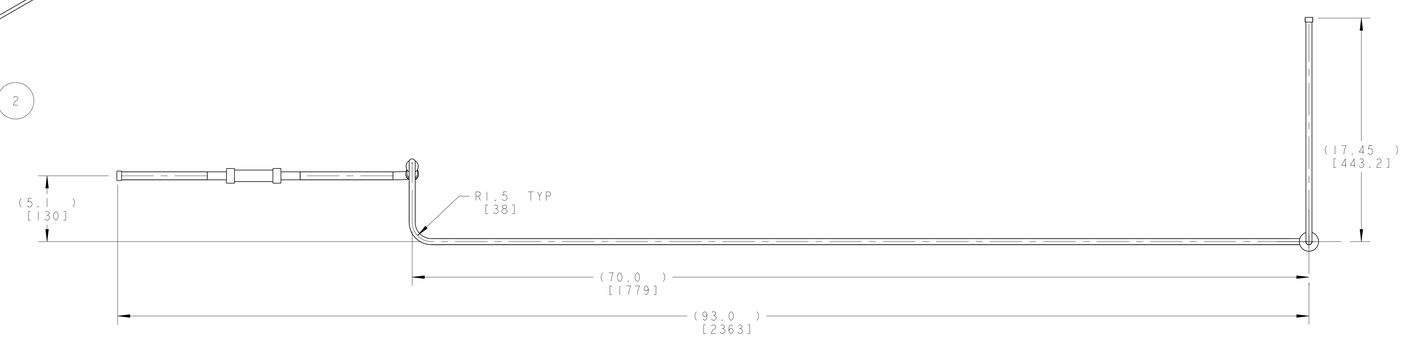

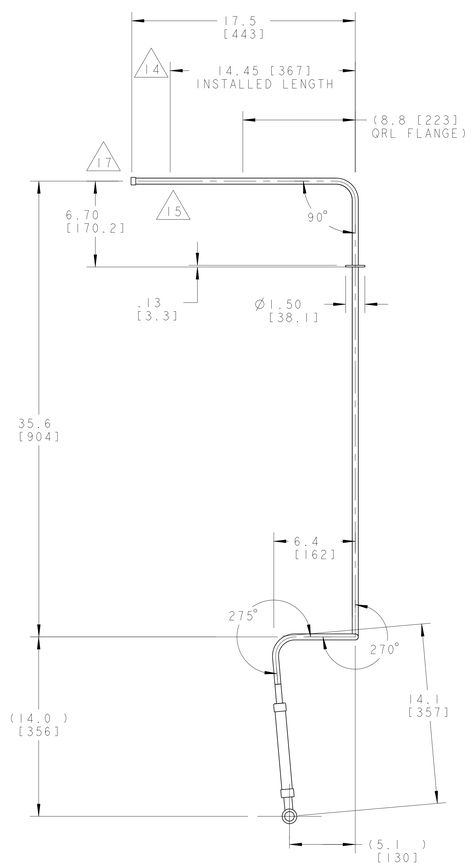

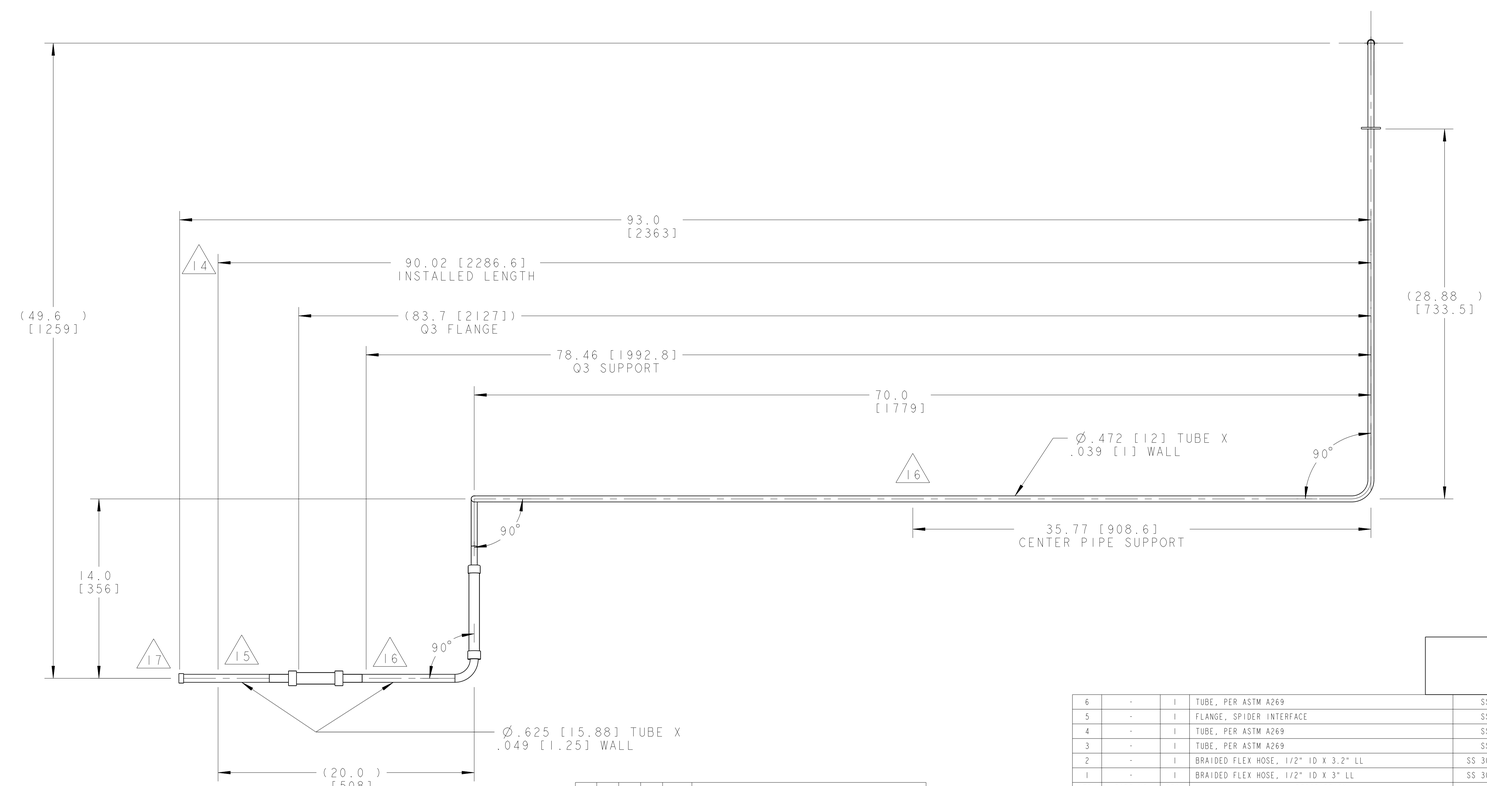

ITEM	PART NO	REQD	DESCRIPTION	MATERIAL
6	-	1	TUBE, PER ASTM A269	SS 304L
5	-	1	FLANGE, SPIDER INTERFACE	SS 304L
4	-	1	TUBE, PER ASTM A269	SS 304L
3	-	1	TUBE, PER ASTM A269	SS 304L
2	-	1	BRAIDED FLEX HOSE, 1/2" ID X 3.2" LL	SS 300 SERIES
1	-	1	BRAIDED FLEX HOSE, 1/2" ID X 3" LL	SS 300 SERIES

THIRD ANGLE PROJECTION

REV	DWG	CHK	ZONE	DATE	CHANGES
B	ARH	SPV		01/07/03	REVISED DRAWING NOTES 13, 16 & 17, MINOR DRAWING DIMENSIONAL CHANGES
A	ARH	SPV		11-04-02	INITIAL RELEASE

UNLESS OTHERWISE SPECIFIED
TOLERANCES
X.X ± 0.1 FRAC. ± 1/64
X.XX ± 0.03 Angles ± 1.00°
X.XXX ± 0.010 FINISH 125 √
DO NOT SCALE PRINT
THREADS ARE CLASS 2
CHAMFER ENDS OF ALL SCREW THREADS 30°
CUT ROUND, 1.5 THREAD RELIEF ON MACHINED THREADS
BREAK EDGES .015 MAX. ON MACHINED WORK
REMOVE BURRS, WELD SPLATTER & LOOSE SCALE
IN ACCORDANCE WITH ASME Y14.5M & BNL1

SHOP ORDERS
ACCT NO. / NO. REQD
DEL TO
SURFACE TREATMT.
IDENT METHOD TAG
PROJECT NUMBER N/A
PROJECT NAME N/A
DWG BY R.A.MANTIA DATE 13-Dec-01
CHK BY Jon Zbasnik/S.Virostek DATE 29-Sep-02
APR BY Jon Zbasnik/S.Virostek DATE 29-Sep-02
DEN NO. -
ISSD. -
DATE -
REQD. -

ERNEST ORLANDO LAWRENCE BERKELEY NATIONAL LABORATORY
UNIVERSITY OF CALIFORNIA - BERKELEY

LHC IR FEEDBOX
CRYOGENICS
PIPE, KD2

MICROFILMED: | DWG. TYPE: ASSEM | SHOWN ON: - | SCALE: 1/32 | DO NOT SCALE PRINTS
PATENT CLEAR: | DESIGN ACCT. NO.: Z5LCE2 | CATEGORY CODE: LH2003 | DWG. NO.: 2515206 | SIZE: B | REV.: B
SHEET 1 OF 1

DWG. NO. 2515206 | SIZE B | REV 1