NOTES: (UNLESS OTHERWISE SPECIFIED)

1. THIS IS A CRYOGENIC VACUUM COMPONENT.
2. CLEANING PROCEEDURE: PER APPLICABLE LBNL TRAVELER.
3. DIMENSIONS AND TOLERANCES PER ANSI Y14.5M-1982. UNITS ARE IN INCHES [mm] UNLESS OTHERWISE SPECIFIED.
4. USE OF SULFUR OR SILICONE BEARING OILS, LUBRICANTS, OR COOLANTS ARE STRICTLY PROHIBITED.
5. USE OF RESIN OR RUBBER BONDED ABRASIVES UNDER POWER IS STRICTLY PROHIBITED. USE VITREOUS BONDED ABRASIVES ONLY.
6. PERFORM ACCEPTANCE TESTS PER APPLICBLE LBNL TRAVELER.
7. MARK THE CUT LOCATION FOR FLANGES TO BE INSTALLED AT CERN BY AN INDELIBLE SCRIBE LINE.
8. MARK THE CUT LOCATION FOR INSTALLATION INTO THE DFBX BY AN INDELIBLE SCRIBE LINE.
9. GUIDE RING MAY BE SPLIT ON HORIZONTAL AXIS TO FACILITATE INSTALLATION.
10. DIMENSIONS IN mm AND PERTAIN TO TUBE INNER DIAMETER.

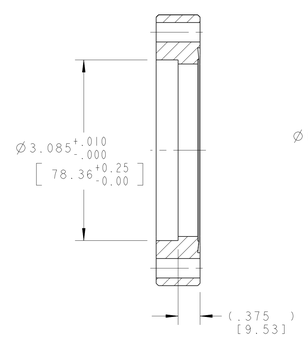

4.625 CF, MODIFIED

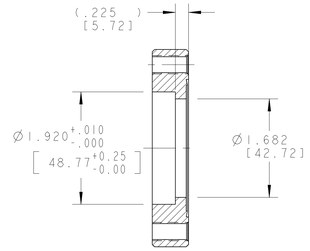

3.325 CF, MODIFIED

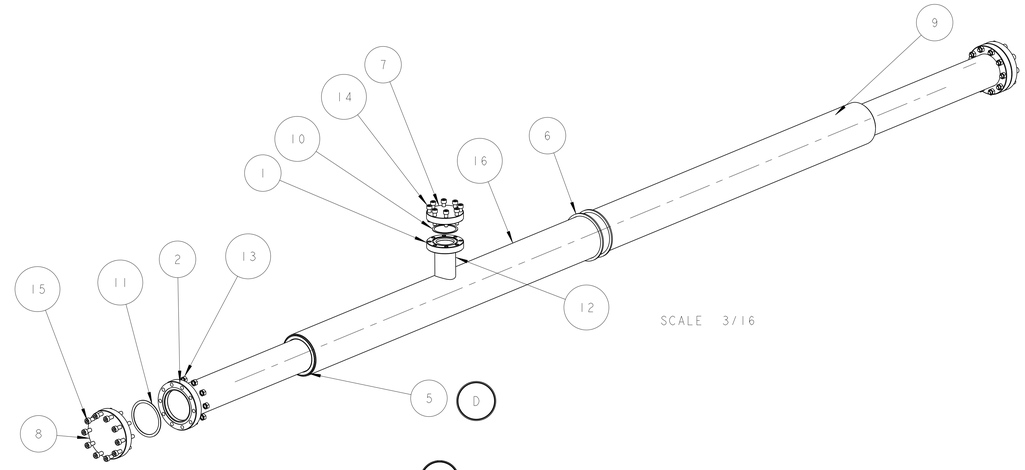

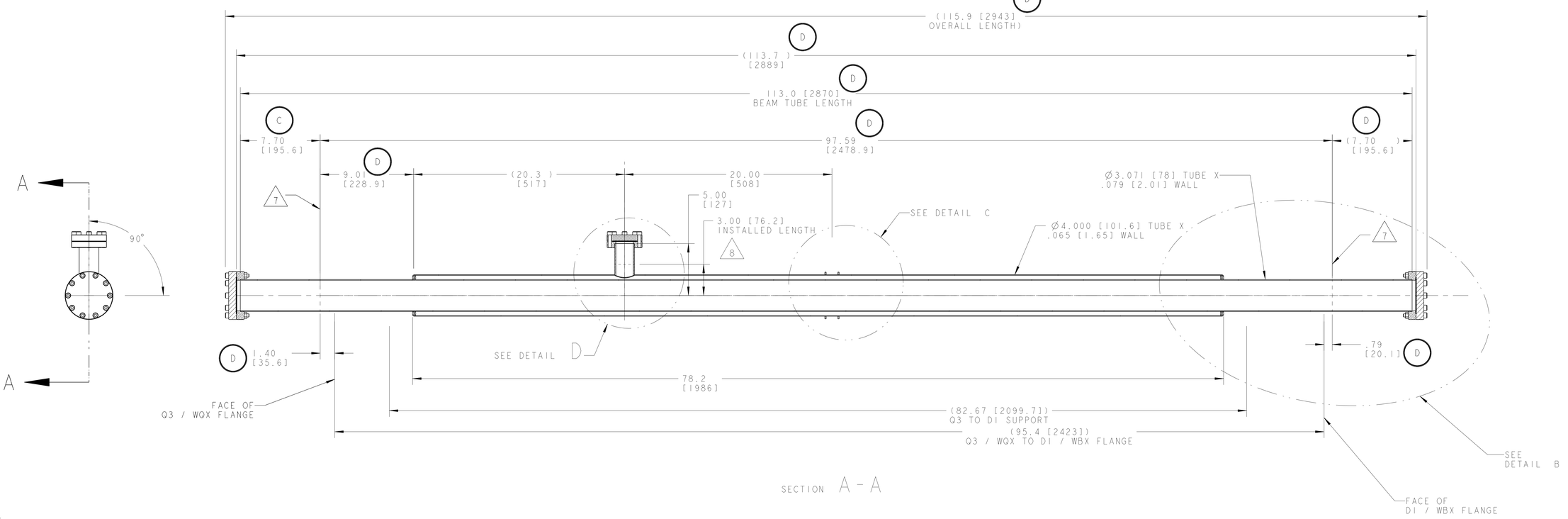

SECTION A - A

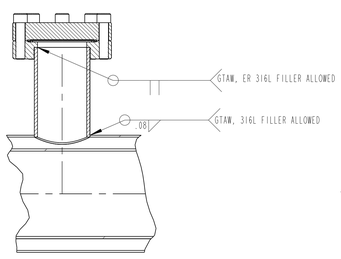

DETAIL D
SCALE 1/2

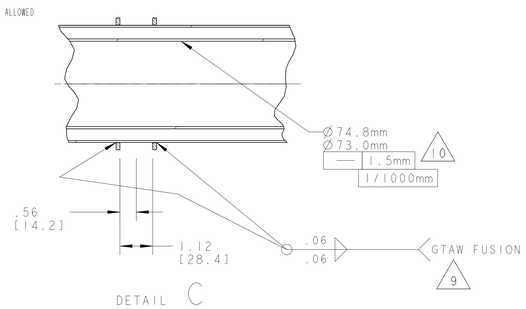

DETAIL C
SCALE 1/2

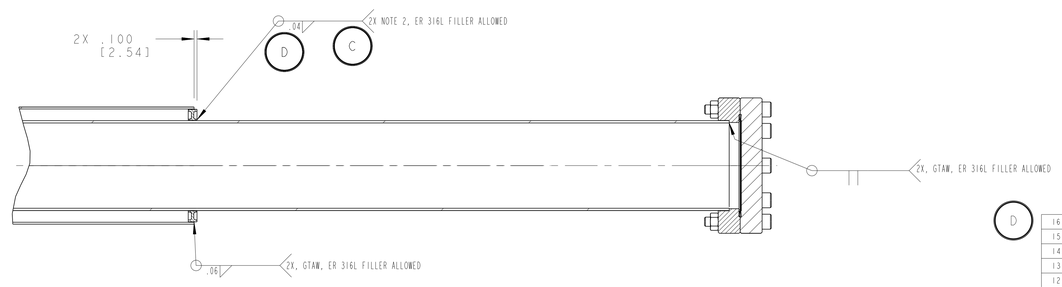

DETAIL B
SCALE 1/2

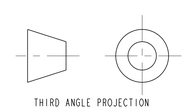

THIRD ANGLE PROJECTION

REV	DWG	CHK	ZONE	DATE	CHANGES
D	RLM	JPZ		6/23/03	REDESIGNED 251534; .04 WAS .06 115.9 WAS 114.5; 113.7 WAS 112.4; 113 WAS 111.6; 97.59 WAS 94.05; 1.40 WAS -1.55; 7.70 WAS 9.88; .79 WAS .20 ADDED 90.01, MDC # WAS 110022, TUBE WAS ASTM A312; REMOVED SKIP WELD.
C	RLM	JPZ		3/18/03	CHANGED BEAM TUBE LENGTH AND CUT MARK LOCATIONS: 114.5 WAS 122.1, 112.4 WAS 119.9, 7.70 WAS 4.13, 94.05 WAS 110.94, 1.55 WAS 2.03, SOME NEW DIMS. WELD WAS .08 ON ARROW SIDE, NO SKIP WELD.
B	RLM	JPZ		1-24-03	COMPLETE OVERHAUL. DRW NOW REFERS TO AN INSTANCE OF 251855. SEE 251855 FOR MORE INFORMATION.
A	ARH	SPV		10-25-02	INITIAL RELEASE

UNLESS OTHERWISE SPECIFIED

TOLERANCES		
	X.X ± 0.1	FRAC. ± 1/64
	X.XX ± 0.03	Angles ± 1.00°
	X.XXX ± 0.010	FINISH 125 √(µin)

DO NOT SCALE PRINT

THREADS ARE CLASS 2
CHAMFER ENDS OF ALL SCREW THREADS 30°.
CUT ROUND, 1.5 THREAD RELIEF ON MACHINED THREADS
BREAK EDGES .016 MAX. ON MACHINED WORK
REMOVE BURRS, WELD SPLATTER & LOOSE SCALE
IN ACCORDANCE WITH ASME Y14.5M & B46.1

SHOP ORDERS

ACCT NO.	NO. REQD	DATE	-
REL		JOB NO.	-
ID		DATE	-
		REQD	-
SURFACE TREATMT	-		
IDENT METHOD	TAG		
PROJECT NUMBER	N/A		
PROJECT NAME	N/A		
DWG BY	KNOLLS	DATE	19-Dec-02
CHK BY	Jon Zbasnik	DATE	04-02-02
APR BY	Jon Zbasnik	DATE	04-02-02

ERNEST ORLANDO LAWRENCE BERKELEY NATIONAL LABORATORY
UNIVERSITY OF CALIFORNIA - BERKELEY

LHC IR FEEDBOX
CRYOGENICS
V PIPE & JACKET ASSEMBLY, IP 1 & 5

MICROFILMED:	DWG. TYPE	SHOWN ON	SCALE: 1/4	DO NOT SCALE PRINTS
	ASSEM	-	SHEET 1 OF 1	

PATENT CLEAR:	DESIGN ACCT. NO.	CATEGORY CODE	DWG. NO.	SIZE	REV.
	Z5LCE2	LH2003	2515106	D	D

ITEM	PART NO	REQD	DESCRIPTION	MATERIAL
16	-	1	TUBE, PER ASTM A269	SS 304L
15	-	20	SHCS, M8, 50LG, McMASTER #91292A154	ST 18-8
14	-	8	SHCS 5/16-24 UNF, 1.25LG, McMASTER #92196A343	SS 18-8
13	-	20	NUT, M8, McMASTER #91828A410	ST 18-8
12	-	1	NIPPLE, 1.50" PIPE, SCH 10	SS 304L
11	-	2	GASKET, COPPER, MDC #191011	Cu
10	-	1	GASKET, COPPER, MDC #191007	Cu
9	-	1	BEAM TUBE, BNL SPEC LHC-MAG-M-1016	-
8	-	2	4.625" CONFLAT, MDC #110022	-
7	-	1	3.375" CONFLAT, BLANK, MDC #110015	-
6	251536	2	GUIDE RING	SS 304L
5	251534	2	JACKET WELD CAP	SS 316L
2	-	2	4.625" CONFLAT, MDC #110024, MODIFIED	-
1	-	1	3.375" CONFLAT, MDC # 130016, MODIFIED	-

DWG. NO. 2515106 SIZE D REV. D