NOTES: (UNLESS OTHERWISE SPECIFIED)

1. THIS IS A CRYOGENIC VACUUM COMPONENT.
2. CLEANING PROCEEDURE: PER APPLICABLE LBNL TRAVELER.
3. DIMENSIONS AND TOLERANCES PER ANSI Y14.5M-1982. UNITS ARE IN INCHES [mm] UNLESS OTHERWISE SPECIFIED.
4. USE OF SULFUR OR SILICONE BEARING OILS, LUBRICANTS, OR COOLANTS ARE STRICTLY PROHIBITED.
5. USE OF RESIN OR RUBBER BONDED ABRASIVES UNDER POWER IS STRICTLY PROHIBITED. USE VITREOUS BONDED ABRASIVES ONLY.
6. PERFORM ACCEPTANCE TESTS PER APPLICBLE LBNL TRAVELER.
7. MARK THE CUT LOCATION FOR FLANGES TO BE INSTALLED AT CERN BY AN INDELIBLE SCRIBE LINE.
8. MARK THE CUT LOCATION FOR INSTALLATION INTO THE DFBX BY AN INDELIBLE SCRIBE LINE.
9. GUIDE RING MAY BE SPLIT ON HORIZONTAL AXIS TO FACILITATE INSTALLATION.
10. DIMENSIONS IN mm AND PERTAIN TO TUBE INNER DIAMETER.

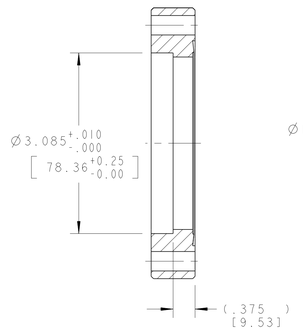

4.625 CF, MODIFIED

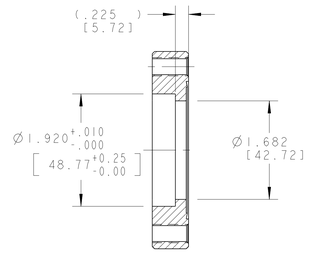

3.325 CF, MODIFIED

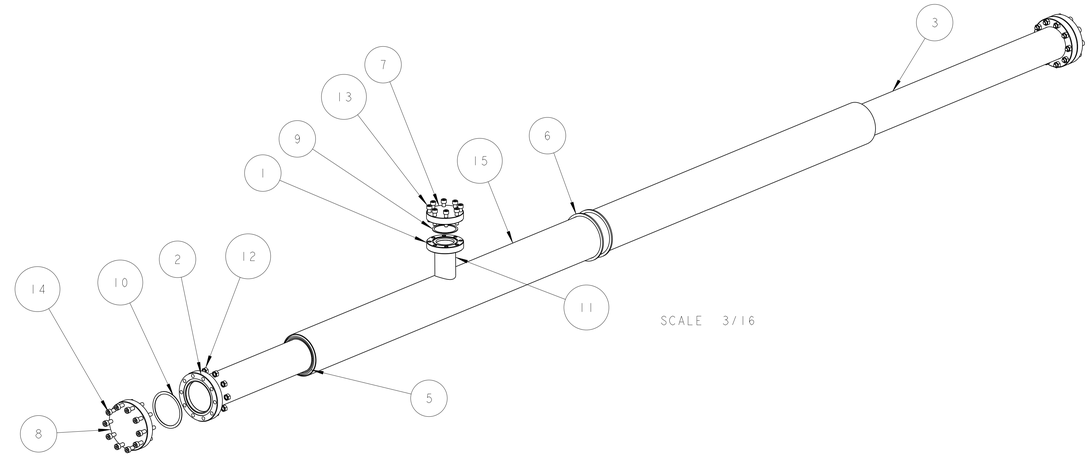

SCALE 3/16

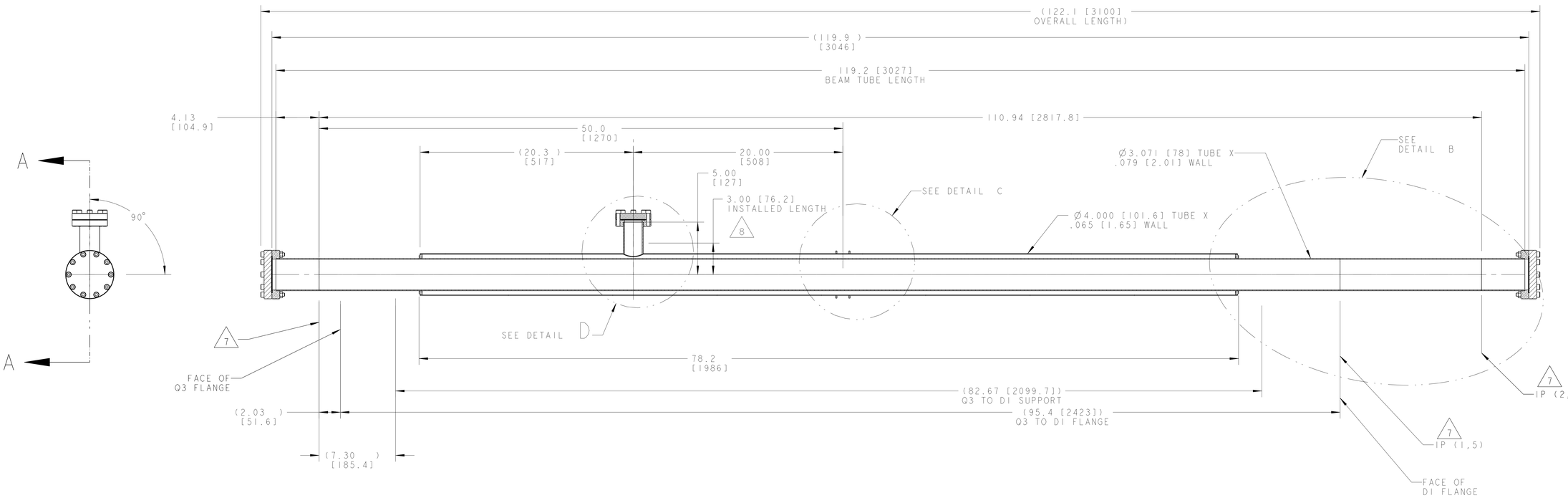

SECTION A - A

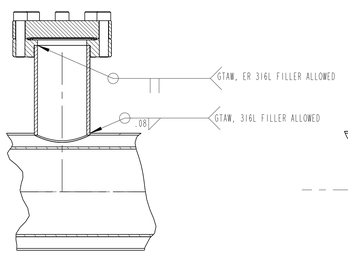

DETAIL D
SCALE 1/2

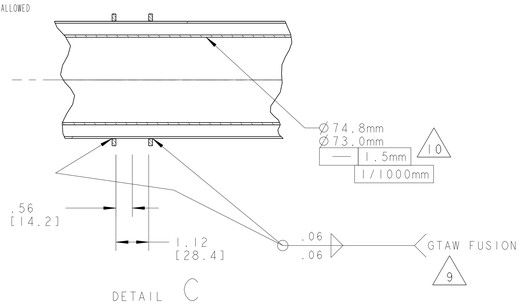

DETAIL C
SCALE 1/2

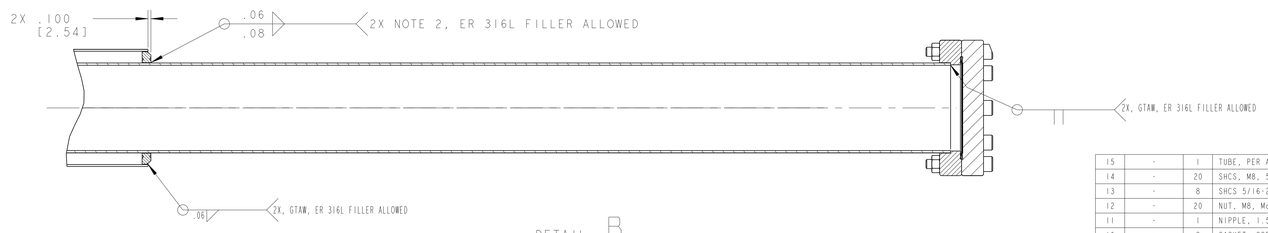

DETAIL B
SCALE 1/2

ITEM	PART NO	REQD	DESCRIPTION	MATERIAL
15	-	1	TUBE, PER ASTM A312	SS 304L
14	-	20	SHCS, M8, 50LG, McMASTER #91292A154	ST 18-8
13	-	8	SHCS 5/16-24 UNF, 1.25LG, McMASTER #92196A343	SS 18-8
12	-	20	NUT, M8, McMASTER #91828A410	ST 18-8
11	-	1	NIPPLE, 1.50" PIPE, SCH 10	SS 304L
10	-	2	GASKET, COPPER, MDC #191011	Cu
9	-	1	GASKET, COPPER, MDC #191007	Cu
8	-	2	4.625" CONFLAT, MDC #110022	-
7	-	1	3.375" CONFLAT, BLANK, MDC #110015	-
6	251536	2	GUIDE RING	SS 304L
5	251534	2	JACKET WELD CAP	SS 316L
3	-	1	BEAM TUBE, BNL SPEC LHC-MAG-M-1016	-
2	-	2	4.625" CONFLAT, MDC #110022, MODIFIED	-
1	-	1	3.375" CONFLAT, MDC # 130016, MODIFIED	-

REV	DWG	CHK	ZONE	DATE	CHANGES
B	RLM	JPZ		1-24-03	COMPLETE OVERHAUL. DRW NOW REFERS TO AN INSTANCE OF 251855. SEE 251855 FOR MORE INFORMATION.
A	ARH	SPV		10-25-02	INITIAL RELEASE

THIRD ANGLE PROJECTION

UNLESS OTHERWISE SPECIFIED
TOLERANCES: X.X ± 0.1 FRAC. ± 1/64; X.XX ± 0.03 Angles ± 1.00°; X.XXX ± 0.010 FINISH 125 μin
DO NOT SCALE PRINT
THREADS ARE CLASS 2
CHAMFER ENDS OF ALL SCREW THREADS 30°
CUT ROUND, 1.5 THREAD RELIEF ON MACHINED THREADS
BREAK EDGES .016 MAX. ON MACHINED WORK
REMOVE BURRS, WELD SPLATTER & LOOSE SCALE
IN ACCORDANCE WITH ASME Y14.5M & B46.1

SHOP ORDERS
ACCT NO. / NO. REQD / DATE / ISSUED / DATE / REQD
SURFACE TREATMENT:
IDENT METHOD: TAG
PROJECT NUMBER: N/A
PROJECT NAME: N/A
DWG BY: KNOLLS DATE 19-Dec-02
CHK BY: Jon Zbasnik DATE 04-02-02
APR BY: Jon Zbasnik DATE 04-02-02

ERNEST ORLANDO LAWRENCE BERKELEY NATIONAL LABORATORY
UNIVERSITY OF CALIFORNIA - BERKELEY

LHC IR FEEDBOX
CRYOGENICS
V PIPE & JACKET ASSEMBLY

MICROFILMED: | DWG. TYPE: ASSEM | SHOWN ON: - | SCALE: 1/4 | DO NOT SCALE PRINTS
PATENT CLEAR: | DESIGN ACCT. NO.: Z5LCE2 | CATEGORY CODE: LH2003 | DWG. NO.: 2515106 | SIZE: B | REV.:
SHEET 1 OF 1

DWG. NO. 2515106 B 1