NOTES: (UNLESS OTHERWISE SPECIFIED)

1. THIS IS A CRYOGENIC VACUUM COMPONENT.
2. WELDING PROCEDURE: PER VENDOR SPECIFICATION WITH LBNL APPROVAL.
3. CLEANING PROCEDURE : PER VENDOR SPECIFICATION WITH LBNL APPROVAL.
4. PACKAGING AND STORAGE PROCEDURE OF THE COMPONENTS: PER VENDOR SPECIFICATION WITH LBNL APPROVAL.
5. DIMENSIONS AND TOLERANCING PER ANSI Y14.5M-1982. UNITS ARE IN INCHES [mm] UNLESS OTHERWISE SPECIFIED.
6. USE OF SULFUR OR SILICONE BEARING OILS, LUBRICANTS, OR COOLANTS ARE STRICTLY PROHIBITED.
7. USE OF RESIN OR RUBBER BONDED ABRASIVES UNDER POWER IS STRICTLY PROHIBITED. USE VITREOUS BONDED ABRASIVES ONLY.
8. VENDOR SUGGESTED CHANGES TO WELD PREPS; SUBJECT TO LBNL APPROVAL.
9. FITTINGS MAY BE USED IN PLACE OF BENDS; SUBJECT TO LBNL APPROVAL.
10. VENDOR SUGGESTED CHANGES TO TOLERANCES TO FACILITATE FABRICATION OR ASSEMBLY; SUBECT TO LBNL APPROVAL.
11. REMOVE ALL THE BURRS AND REAM THE ENDS FOR CIRCULARITY AND CLEAN ENDS.
12. TUBE END SURFACE MUST BE PERPENDICULAR TO THE TUBE AXIS WITHIN +/-.010.
13. PERFORM ACCEPTANCE TESTS PER LBNL SPECIFICATION M989.
14. A MARK DESIGNATING THE INSTALLED LENGTH WILL BE UTILIZED DURING FINAL INSTALLATION OF THE DEEDBOX ASSEMBLY. MARK, SCRIBE OR ETCH THIS LOCATION IN A PERMANENT MANNER, SUBJECT TO LBNL APPROVAL, TO AN ACCURACY OF 0.063".
15. PROVIDE A MINIMUM LENGTH OF 4.0" OF STRAIGHT, SMOOTH PIPE ON THE INDICATED SIDE OF THE INSTALLED LENGTH MARK FOR PIPE WELDING DURING FINAL INSTALLATION OF THE FEEDBOX ASSEMBLY.
16. PIPE MUST BE STRAIGHT AND SMOOTH (NO BUMPS) FOR 1.5" ON EITHER SIDE OF THE CENTER-PLANE OF THE SUPPORT. (B)
17. CAP BOTH ENDS OF PIPE TO FACILITATE ACCEPTANCE TESTS.

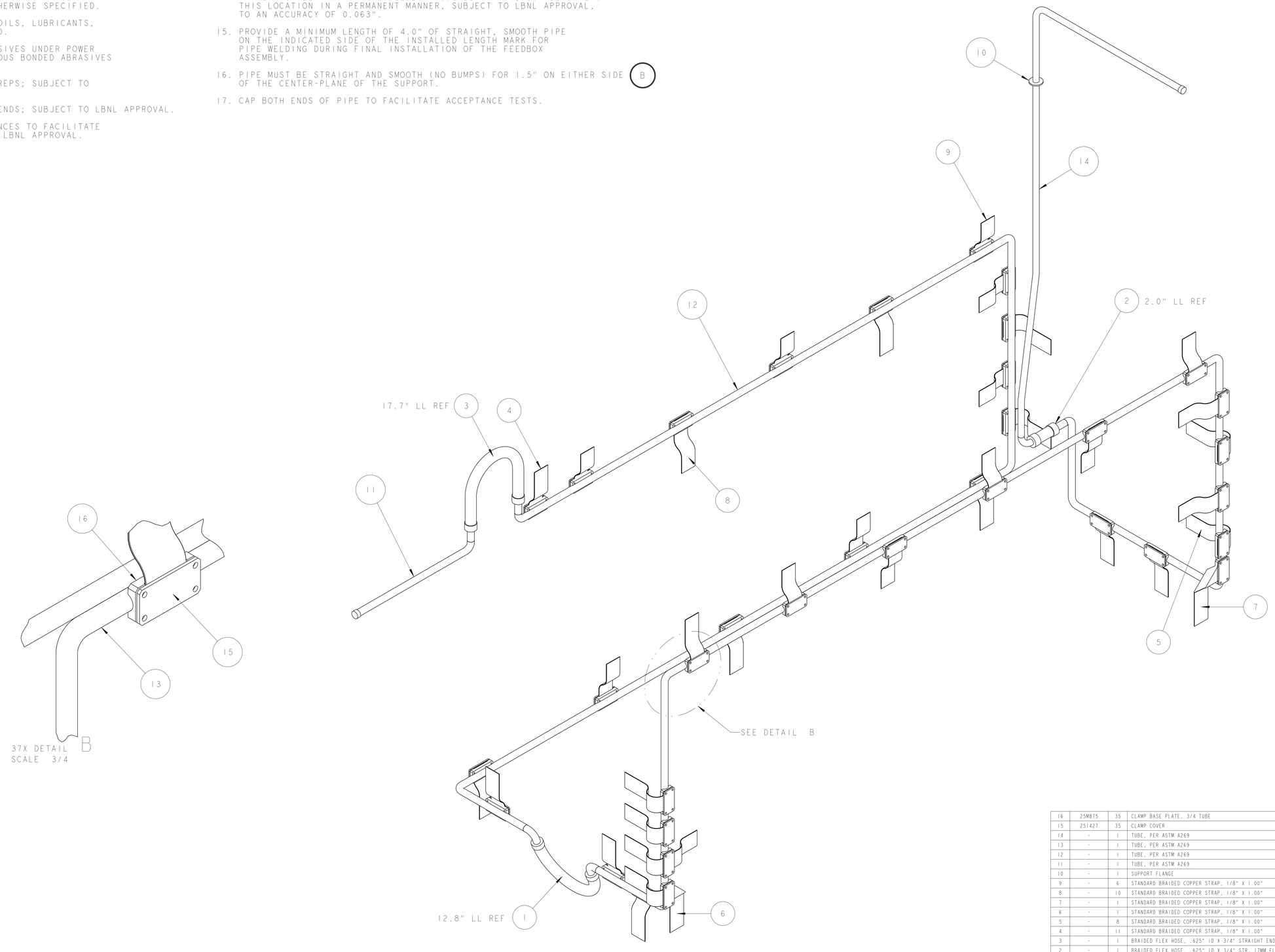

ITEM	PART NO	REQD	DESCRIPTION	MATERIAL
16	25M875	35	CLAMP BASE PLATE, 3/4 TUBE	COPPER, OFHC, C101
15	251427	35	CLAMP COVER	OFHC, C101
14	-	1	TUBE, PER ASTM A269	SS 304L
13	-	1	TUBE, PER ASTM A269	SS 304L
12	-	1	TUBE, PER ASTM A269	SS 304L
11	-	1	TUBE, PER ASTM A269	SS 304L
10	-	1	SUPPORT FLANGE	SS 304L
9	-	6	STANDARD BRAIDED COPPER STRAP, 1/8" X 1.00"	OFC COPPER BRAID
8	-	10	STANDARD BRAIDED COPPER STRAP, 1/8" X 1.00"	OFC COPPER BRAID
7	-	1	STANDARD BRAIDED COPPER STRAP, 1/8" X 1.00"	OFC COPPER BRAID
6	-	1	STANDARD BRAIDED COPPER STRAP, 1/8" X 1.00"	OFC COPPER BRAID
5	-	8	STANDARD BRAIDED COPPER STRAP, 1/8" X 1.00"	OFC COPPER BRAID
4	-	11	STANDARD BRAIDED COPPER STRAP, 1/8" X 1.00"	OFC COPPER BRAID
3	-	1	BRAIDED FLEX HOSE, .625" ID X 3/4" STRAIGHT ENDS	SS 300 SERIES
2	-	1	BRAIDED FLEX HOSE, .625" ID X 3/4" STR, 17MM ELBOW	SS 300 SERIES
1	-	1	BRAIDED FLEX HOSE, .625" ID X 3/4" ELBOW WELD ENDS	SS 300 SERIES

THIRD ANGLE PROJECTION

REV	DWG	CHK	ZONE	DATE	CHANGES
B	ARH	SPV		01/30/03	REVISED DRAWING NOTE 16
A	ARH	SPV		10-29-02	INITIAL RELEASE

UNLESS OTHERWISE SPECIFIED
TOLERANCES: X.X ± 0.1 FRAC. ± 1/64; X.XX ± 0.03 Angles ± 1.00°; X.XXX ± 0.010 FINISH 125 √Ra
DO NOT SCALE PRINT
THREADS ARE CLASS 2
CHAMFER ENDS OF ALL SCREW THREADS 30°
CUT ROUND, 1.5 THREAD RELIEF ON MACHINED THREADS
BREAK EDGES .016 MAX. ON MACHINED WORK
REMOVE BURRS, WELD SPLATTER & LOOSE SCALE
IN ACCORDANCE WITH ASME Y14.5M & BAG.1

SHOP ORDERS
ACCT NO. / NO. REQD / DATE ISSD / DATE REQD / SURFACE TREATMT. / IDENT METHOD TAG / PROJECT NUMBER N/A / PROJECT NAME N/A
DWN BY R.LA MANITIA DATE 29-Jul-02
CHK BY S.VIROSTEK DATE 29-Oct-02
APR BY Jon Zbasnik/D.Oshatz DATE 4-02-02

ERNEST ORLANDO LAWRENCE BERKELEY NATIONAL LABORATORY
UNIVERSITY OF CALIFORNIA - BERKELEY

LHC IR FEEDBOX
CRYOGENICS
PIPE, EX

MICROFILMED: | PATENT CLEAR: | DWG. TYPE ASSEM | DESIGN ACCT. NO. Z5LCE2 | SHOWN ON - | CATEGORY CODE LH2003 | SCALE: 1/32 | DO NOT SCALE PRINTS | SHEET 1 OF 5 | DWG. NO: 2515026 | SIZE B | REV. B

DWG. NO. 2515026 B 1

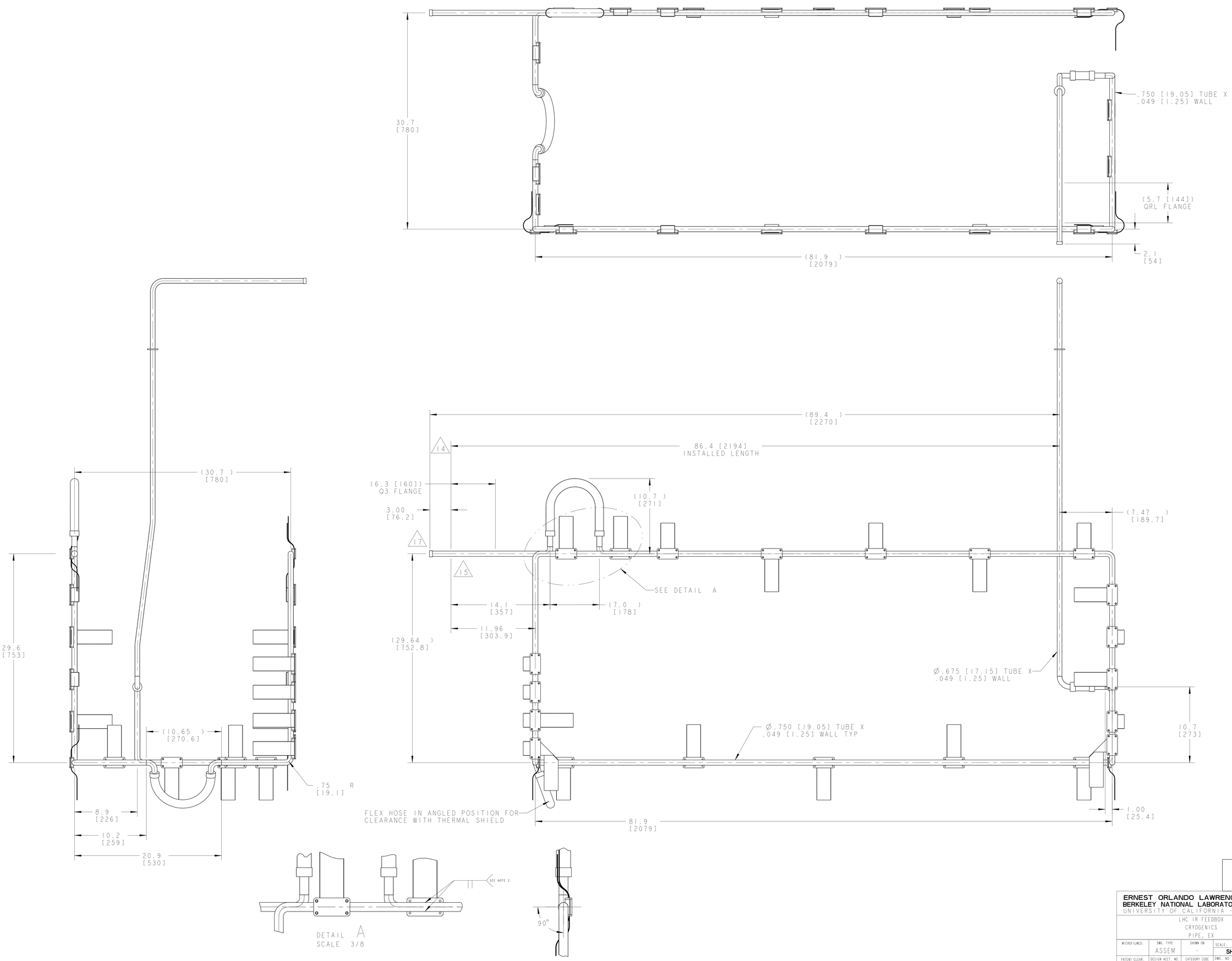

ERNEST ORLANDO LAWRENCE
BERKELEY NATIONAL LABORATORY
UNIVERSITY OF CALIFORNIA · BERKELEY

LHC IR FEEDBOX
CRYOGENICS
PIPE, EX

MICROFILMED:	DWG. TYPE	SHOWN ON	SCALE: 7/32	DO NOT SCALE PRINTS
	ASSEM	-	SHEET 2 OF 5	
PATENT CLEAR:	DESIGN ACCT. NO.	CATEGORY CODE	DWG. NO.	SIZE / REV.
	Z5LCE2	LH2003	2515026	B

DWG. NO. 2515026 SIZE B SHT. 2 OF 5

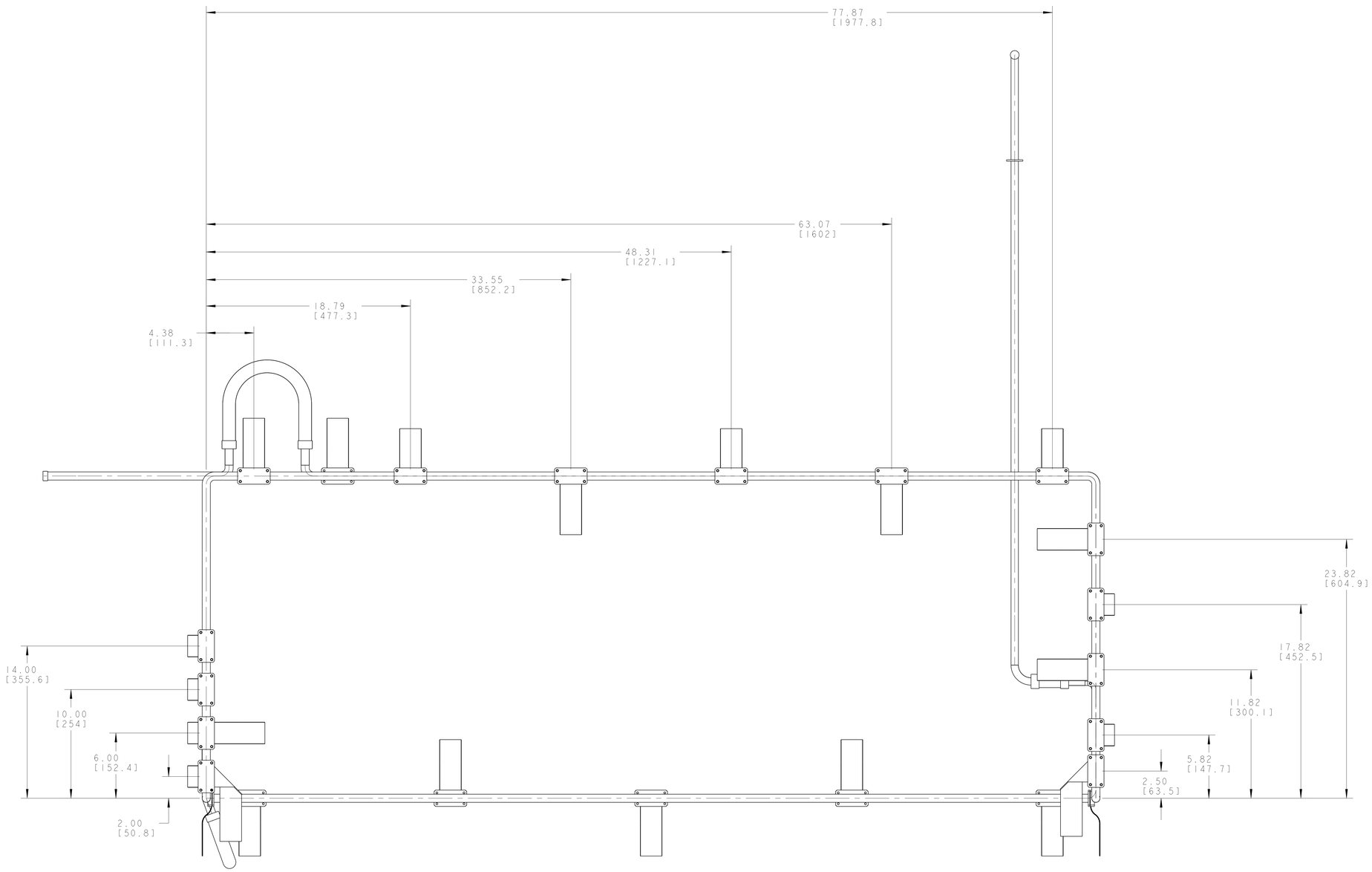

RIGHT SIDE VIEW SCALE 1/4

ERNEST ORLANDO LAWRENCE
BERKELEY NATIONAL LABORATORY
UNIVERSITY OF CALIFORNIA - BERKELEY

LHC IR FEEDBOX
CRYOGENICS
PIPE, EX

MICROFILMED:	DWG. TYPE	SHOWN ON	SCALE: 7/32	DO NOT SCALE PRINTS
	ASSEM	-	SHEET 3 OF 5	
PATENT CLEAR:	DESIGN ACCT. NO.	CATEGORY CODE	DWG. NO.	SIZE / REV.
	Z5LCE2	LH2003	2515026	B

DWG. NO. 2515026 SIZE/REV. B 3

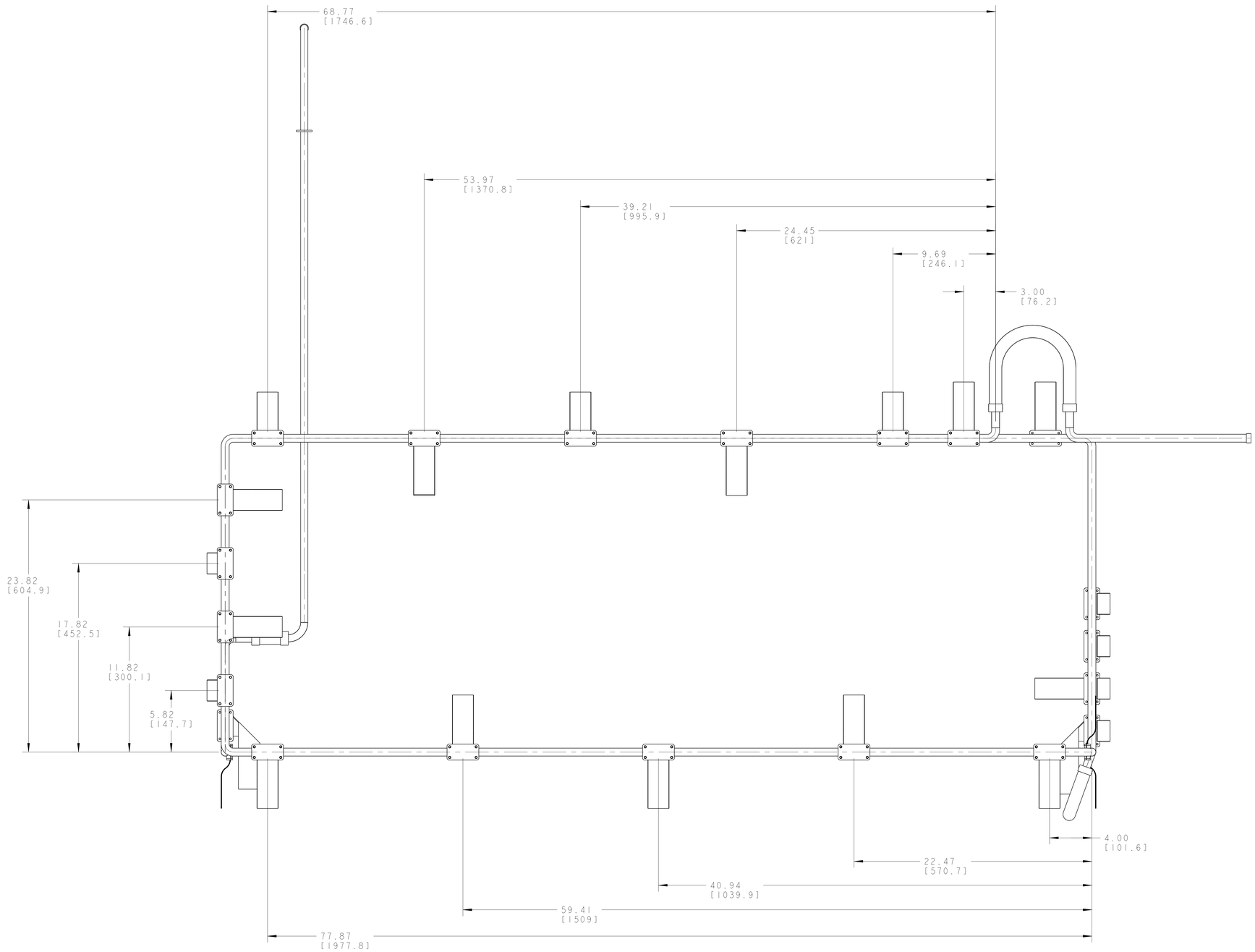

LEFT SIDE VIEW SCALE 1/4

ERNEST ORLANDO LAWRENCE
BERKELEY NATIONAL LABORATORY
UNIVERSITY OF CALIFORNIA - BERKELEY

LHC IR FEEDBOX
CRYOGENICS
PIPE, EX

MICROFILMED:	DWG. TYPE	SHOWN ON	SCALE: 7/32	DO NOT SCALE PRINTS
	ASSEM	-	SHEET 4 OF 5	
PATENT CLEAR:	DESIGN ACCT. NO.	CATEGORY CODE	DWG. NO.	SIZE / REV.
	Z5LCE2	LH2003	2515026	B

DWG. NO. 2515026 SHEET REV. 4 B

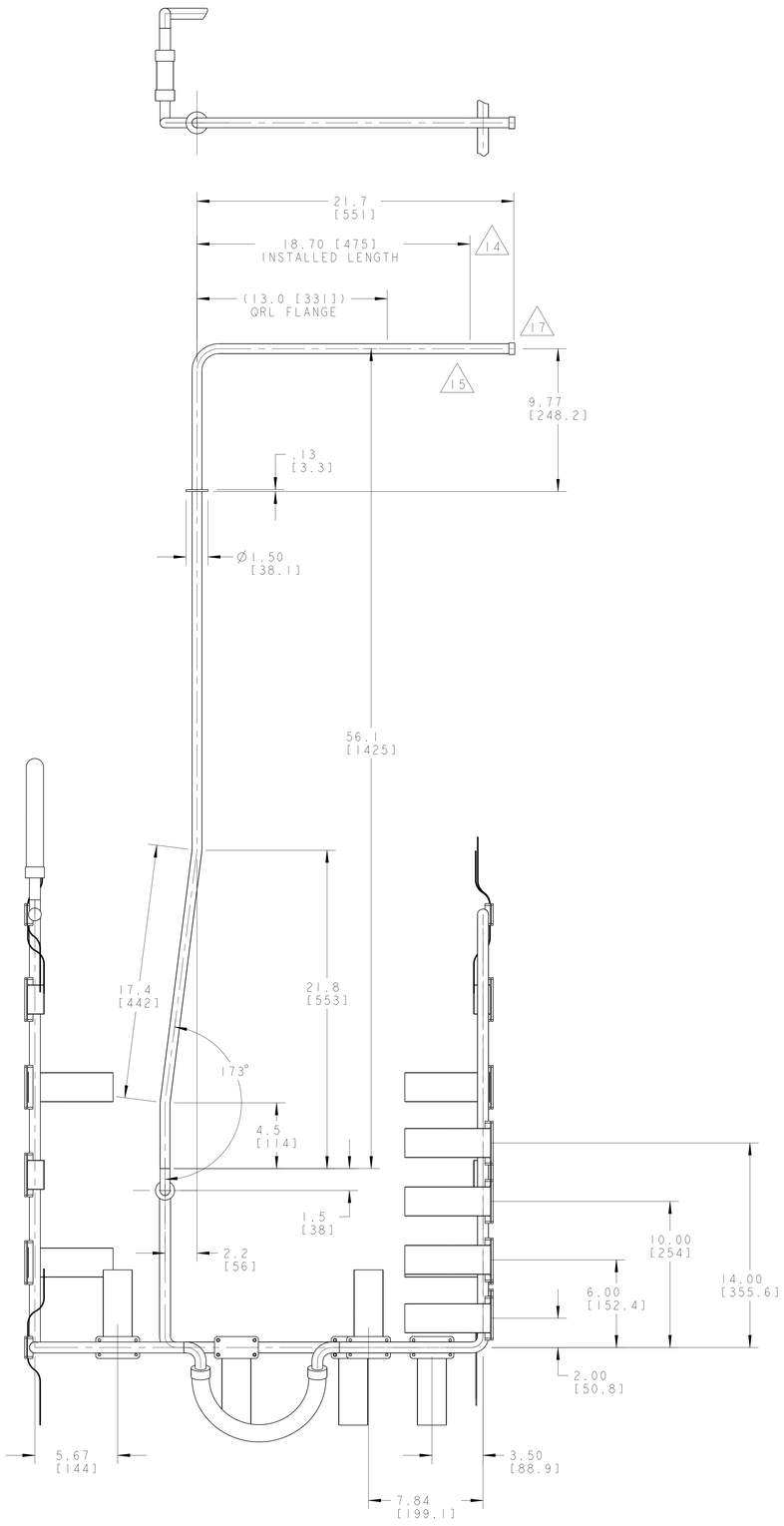

FRONT VIEW SCALE 1/4

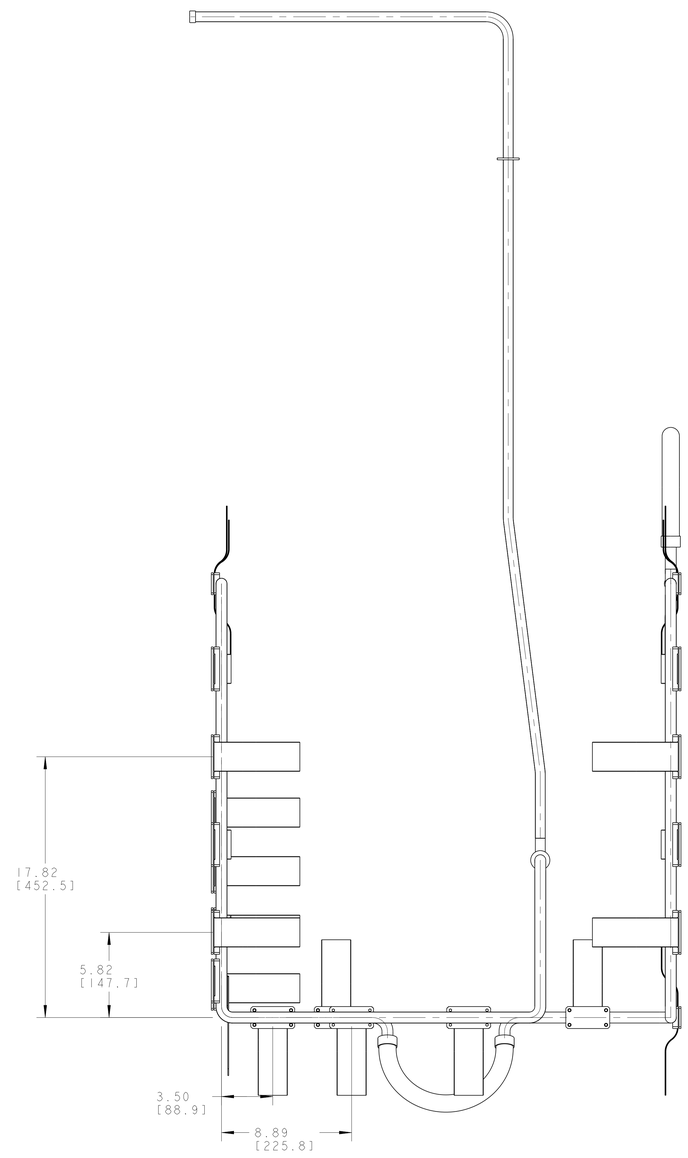

REAR VIEW SCALE 1/4

ERNEST ORLANDO LAWRENCE
BERKELEY NATIONAL LABORATORY
UNIVERSITY OF CALIFORNIA - BERKELEY

LHC IR FEEDBOX
CRYOGENICS
PIPE, EX

MICROFILMED:	DWG. TYPE	SHOWN ON	SCALE: 7/32	DO NOT SCALE PRINTS
	ASSEM	-	SHEET 5 OF 5	
PATENT CLEAR:	DESIGN ACCT. NO.	CATEGORY CODE	DWG. NO.	SIZE / REV.
	Z5LCE2	LH2003	2515026	B

DWG. NO. 2515026 SHEET 5 B