DWG. NO.	SIZE	REV.	SH.
2514384	C	1	

ITEM	PART NO	REQD	DESCRIPTION	MATERIAL
4	-	1	SUPPORT FLANGE	SS 304L
3	-	1	PIPE, PER ASTM A312	SS 304L
2	-	1	PIPE, PER ASTM A312	SS 304L
1	-	1	BRAIDED FLEX HOSE, 2" ID X 6.1 LL	SS 300 SERIES

NOTES: (UNLESS OTHERWISE SPECIFIED)

1. THIS IS A CRYOGENIC VACUUM COMPONENT.
2. WELDING PROCEDURE: PER VENDOR SPECIFICATION WITH LBNL APPROVAL.
3. CLEANING PROCEDURE : PER VENDOR SPECIFICATION WITH LBNL APPROVAL.
4. PACKAGING AND STORAGE PROCEDURE OF THE COMPONENTS: PER VENDOR SPECIFICATION WITH LBNL APPROVAL.
5. DIMENSIONS AND TOLERANCING PER ANSI Y14.5M-1982. UNITS ARE IN INCHES [mm] UNLESS OTHERWISE SPECIFIED.
6. USE OF SULFUR OR SILICONE BEARING OILS, LUBRICANTS, OR COOLANTS ARE STRICTLY PROHIBITED.
7. USE OF RESIN OR RUBBER BONDED ABRASIVES UNDER POWER IS STRICTLY PROHIBITED. USE VITREOUS BONDED ABRASIVES ONLY.
8. VENDOR SUGGESTED CHANGES TO WELD PREPS; SUBJECT TO LBNL APPROVAL.
9. FITTINGS MAY BE USED IN PLACE OF BENDS; SUBJECT TO LBNL APPROVAL.
10. VENDOR SUGGESTED CHANGES TO TOLERANCES TO FACILITATE FABRICATION OR ASSEMBLY; SUBECT TO LBNL APPROVAL.
11. REMOVE ALL THE BURRS AND REAM THE ENDS FOR CIRCULARITY AND CLEAN ENDS.
12. TUBE END SURFACE MUST BE PERPENDICULAR TO THE TUBE AXIS WITHIN +/-.010.
13. PERFORM ACCEPTANCE TESTS PER LBNL SPECIFICATION M989. (B)
14. A MARK DESIGNATING THE INSTALLED LENGTH WILL BE UTILIZED DURING FINAL INSTALLATION OF THE FEEDBOX ASSEMBLY. MARK, SCRIBE OR ETCH THIS LOCATION IN A PERMANENT MANNER, SUBJECT TO LBNL APPROVAL, TO AN ACCURACY OF ±0.063".
15. PROVIDE A MINIMUM LENGTH OF 4.0" OF STRAIGHT, SMOOTH PIPE ON THE INDICATED SIDE OF THE INSTALLED LENGTH MARK FOR PIPE WELDING DURING FINAL INSTALLATION OF THE FEEDBOX ASSEMBLY.
16. PIPE MUST BE STRAIGHT AND SMOOTH (NO BUMPS) FOR 1.5" ON EITHER SIDE OF THE CENTER-PLANE OF THE SUPPORT. (B)
17. CAP BOTH ENDS OF PIPE TO FACILITATE ACCEPTANCE TESTS. (B)

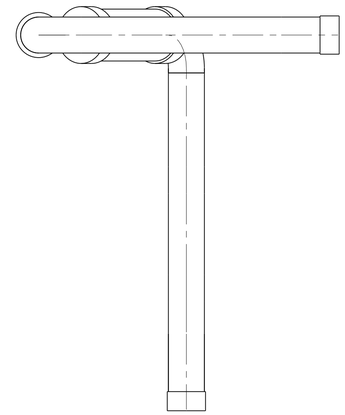

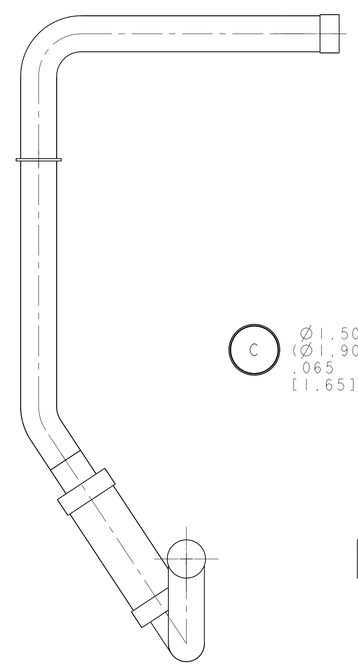

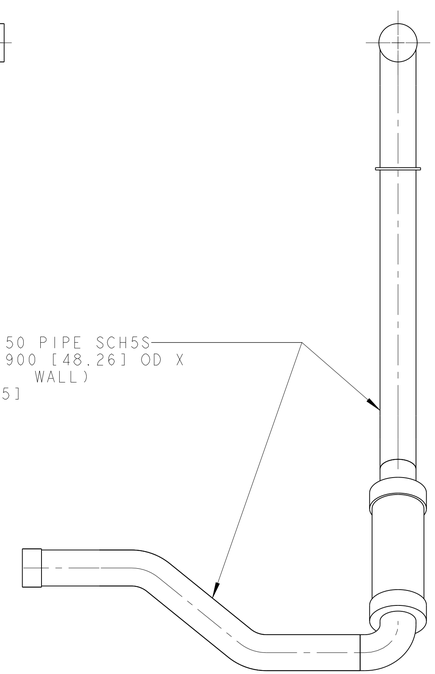

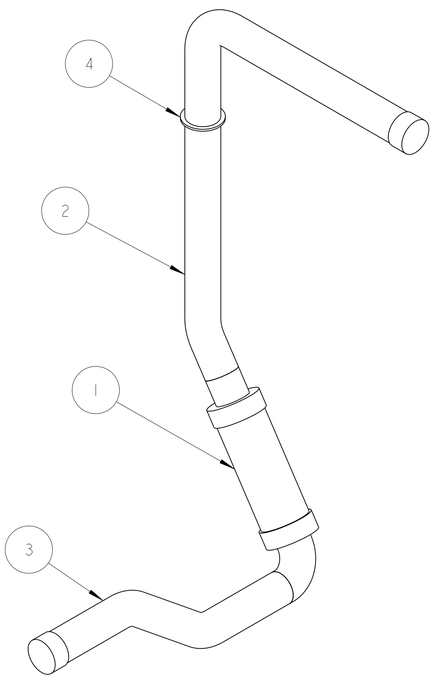

***FOR ADDITIONAL TUBE DIMENSIONS, SEE SHEET 2

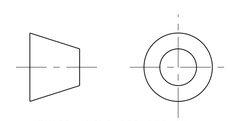

THIRD ANGLE PROJECTION

REV	DWG	CHK	ZONE	DATE	CHANGES
C	RLM	JPZ		5/28/03	RADIUS 2.25 WAS 3.5, PIPE CALL OUT
B	ARH	SPV		01/07/03	REVISED DRAWING NOTES 13, 16 & 17, MINOR DRAWING DIMENSIONAL CHANGES
A	ARH	SPV		11-06-02	INITIAL RELEASE

UNLESS OTHERWISE SPECIFIED

TOLERANCES: X.X ± 0.1 | FRAC. ± 1/64 | X.XX ± 0.03 | Angles ± 1.00° | X.XXX ± 0.010 | FINISH 125 √ (Ra)

DO NOT SCALE PRINT

THREADS ARE CLASS 2
CHAMFER ENDS OF ALL SCREW TREADS 30°
CUT ROUND, 1.5 THREAD RELIEF ON MACHINED THREADS
BREAK EDGES .016 MAX. ON MACHINED WORK
REMOVE BURRS, WELD SPLATTER & LOOSE SCALE
IN ACCORDANCE WITH ASME Y14.5M & B46.1

SHOP ORDERS

ACCT NO.	NO. REQD	SER NO.	-
DEL TO		DATE ISSD	-
SURFACE TREATMT	-	DATE REQD	-
IDENT METHOD	TAG		
PROJECT NUMBER	N/A		
PROJECT NAME	N/A		
DWG BY	R LA MANTIA	DATE	15-Jul-02
CHK BY	Jon Zbasnik/S.Virostek	DATE	06-Nov-02
APR BY	Jon Zbasnik/D.Ohsatz	DATE	4-02-02

ERNEST ORLANDO LAWRENCE BERKELEY NATIONAL LABORATORY
UNIVERSITY OF CALIFORNIA - BERKELEY

LHC IR FEEDBOX
CRYOGENICS
PIPE, LD2

MICROFILMED:	DWG. TYPE	SHOWN ON	SCALE: 1/4	DO NOT SCALE PRINTS
	ASSEM	-	SHEET 1 OF 2	
PATENT CLEAR:	DESIGN ACCT. NO.	CATEGORY CODE	DWG. NO.	SIZE / REV.
	Z5LCE2	LH2003	2514384	C

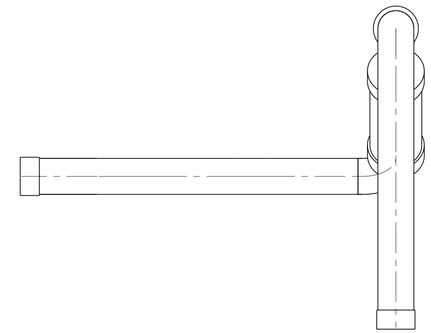

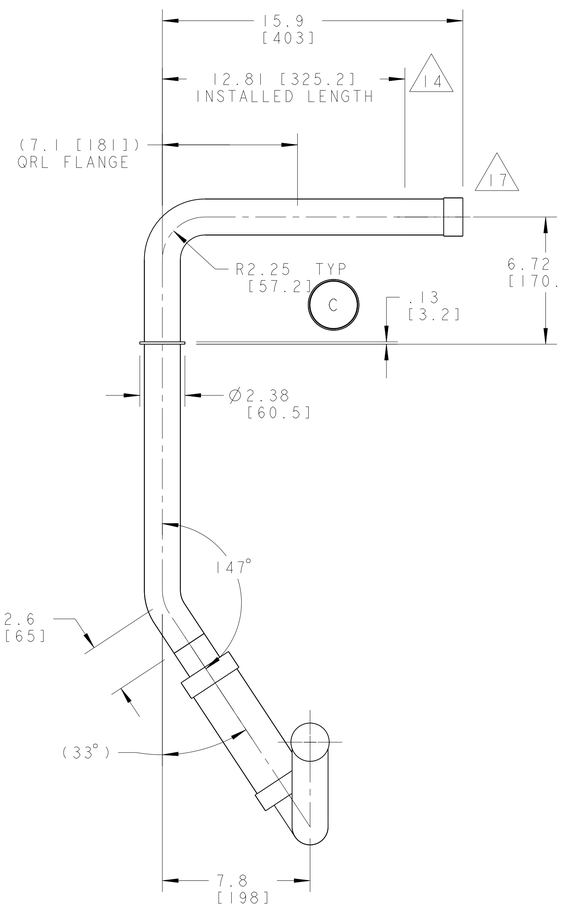

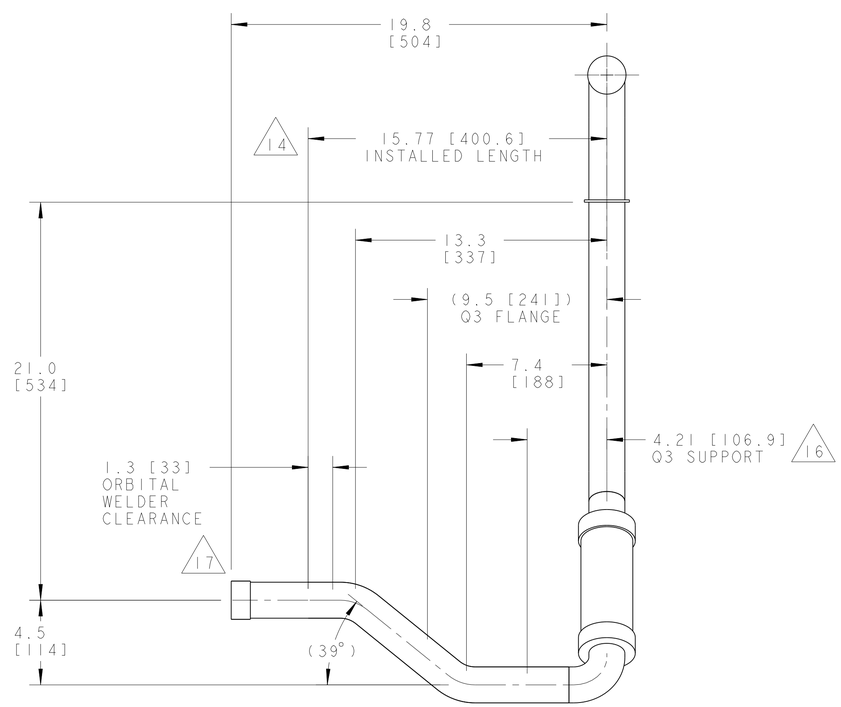

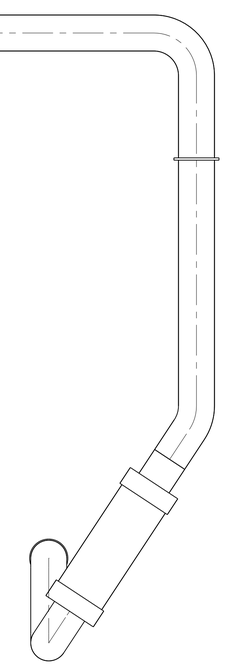

ERNEST ORLANDO LAWRENCE
BERKELEY NATIONAL LABORATORY
UNIVERSITY OF CALIFORNIA - BERKELEY

LHC IR FEEDBOX
CRYOGENICS
PIPE, LD2

MICROFILMED:	DWG. TYPE	SHOWN ON	SCALE: 1/4	DO NOT SCALE PRINTS
	ASSEM	-	SHEET 2 OF 2	
PATENT CLEAR:	DESIGN ACCT. NO.	CATEGORY CODE	DWG. NO.	SIZE / REV.
	Z5LCE2	LH2003	2514384	C