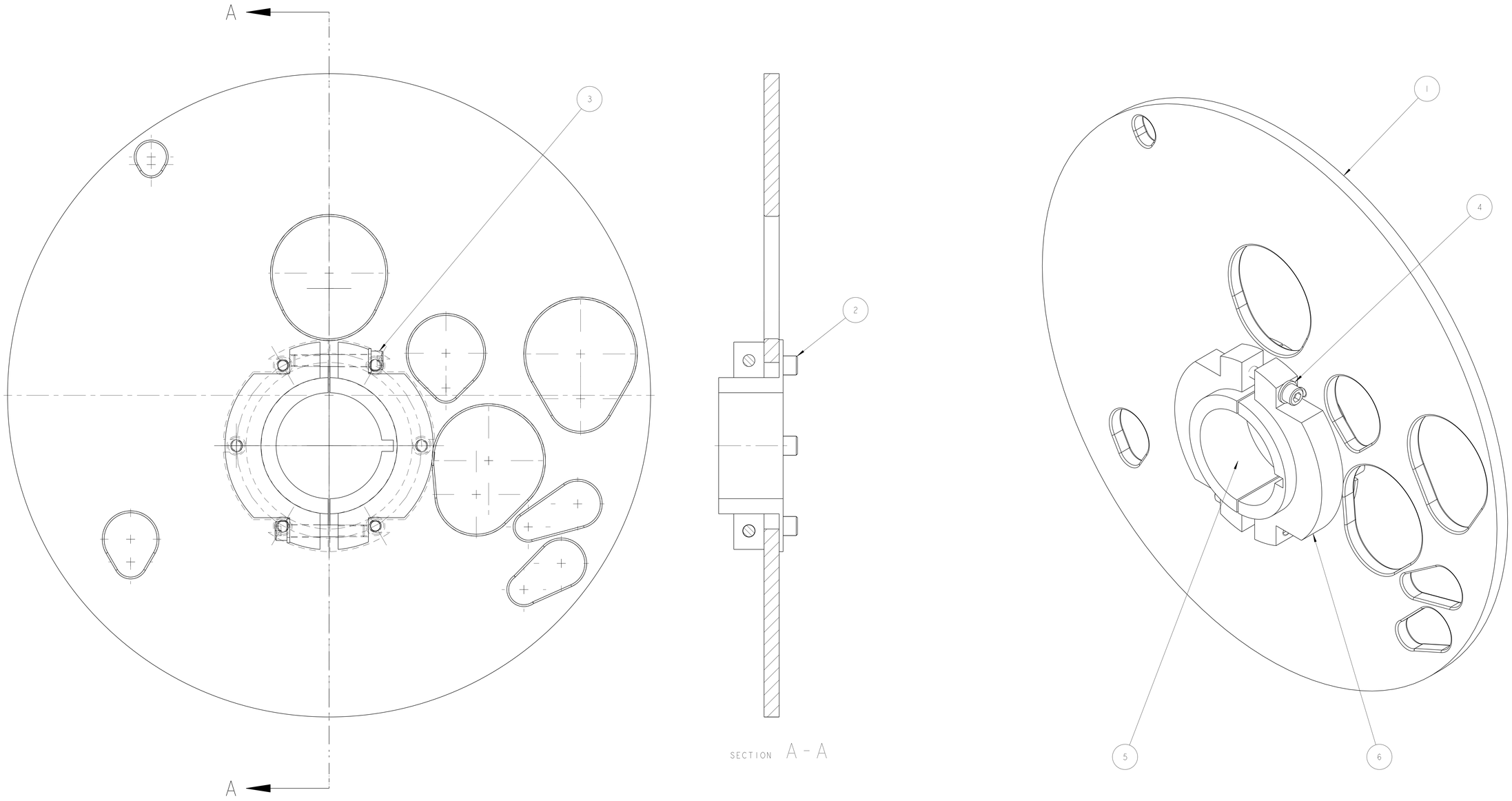

NOTES: UNLESS OTHERWISE SPECIFIED,

1. DIMENSIONS AND TOLERANCING PER ANSI Y14.5M-1982 UNITS ARE IN INCHES UNLESS OTHERWISE SPECIFIED.
2. PART IS PARALLEL TO PLANE OF REINFORCEMENT,
3. PROTECT FINISHED PART BY BAGGING OR SIMILAR METHOD TO PROTECT AND MAINTAIN CLEANLINESS DURING SHIPMENT AND STORAGE.
4. TAG WITH DRAWING NUMBER

ITEM	PART NO	REQD	DESCRIPTION	MATERIAL
6	25M801	2	SPLIT CLAMP	SS 304L
5	25M800	1	SPLIT HUB	SS 304L
4	-	2	WASHER, M10, SILVER PLATED	SS 18-8
3	-	2	SCH M10x1.5, 65mm LG,SILVER PLATE	SS 18-8
2	-	6	SCH, M10x1.5, 16mm LG, SILVER PLATED	SS 18-8
1	-	1	SUPPORT PLATE	NEMA G10

THIRD ANGLE PROJECTION

REV	DWG	CHK	ZONE	DATE	CHANGES
A	MJK	SPV		11-22-02	INITIAL RELEASE

UNLESS OTHERWISE SPECIFIED

TOLERANCES: X.X ± 0.1 FRAC. ± 1/64; X.XX ± 0.02 Angles ± 1.00°; X.XXX ± 0.005 FINISH 125/ 1/64

DO NOT SCALE PRINT

THREADS ARE CLASS 2
CHAMFER ENDS OF ALL SCREW TREADS 30°
CUT ROUND, 1.5 THREAD RELIEF ON MACHINED THREADS
BREAK EDGES .016 MAX. ON MACHINED WORK
REMOVE BURRS, WELD SPLATTER & LOOSE SCALE
IN ACCORDANCE WITH ASME Y14.5M & B46.1

SHOP ORDERS

ACCT NO.	NO. REQD	DATE ISSD	-
DEL TO		DATE REQD	-
SURFACE TREATMT	-		
IDENT METHOD	TAG		
PROJECT NUMBER	N/A		
PROJECT NAME	N/A		
DWG BY	R LA MANTIA	DATE	18-July-02
CHK BY	S.Virostek	DATE	11/22/02
APR BY	OSHATZ	DATE	9/18/02

ERNEST ORLANDO LAWRENCE BERKELEY NATIONAL LABORATORY
UNIVERSITY OF CALIFORNIA - BERKELEY

LHC IR FEEDBOX
CRYOGENICS
SUPPORT, DI SIDE, DFBXD / DFBXH

MICROFILMED:	DWG. TYPE	SHOWN ON	SCALE: 3/4	DO NOT SCALE PRINTS
	ASSEM	-	SHEET 1 OF 2	
PATENT CLEAR:	DESIGN ACCT. NO.	CATEGORY CODE	DWG. NO.	SIZE / REV.
	Z5LCE2	LH2003	25I4136	A

DWG. NO. 25I4136 SIZE A REV. 1

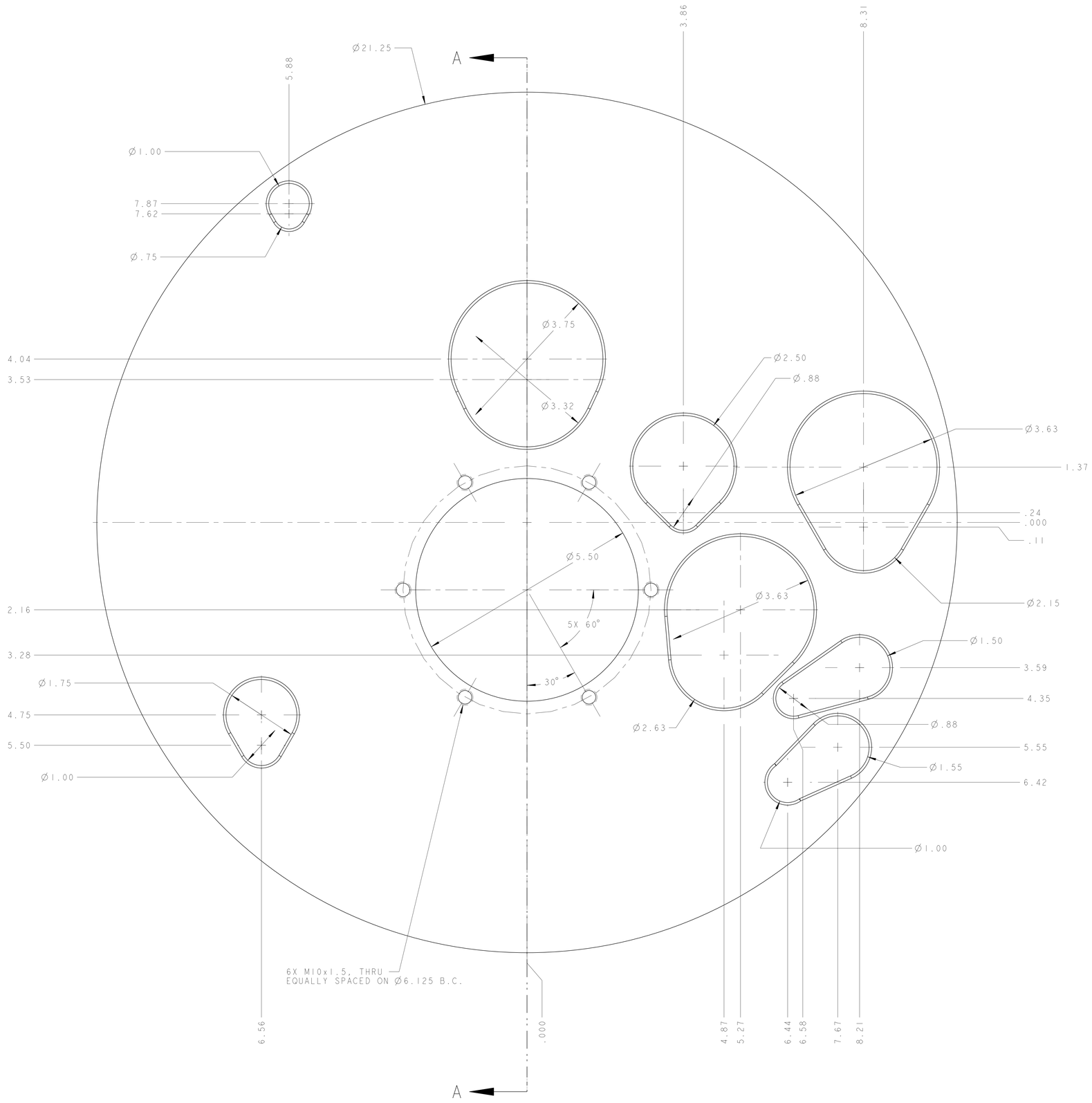

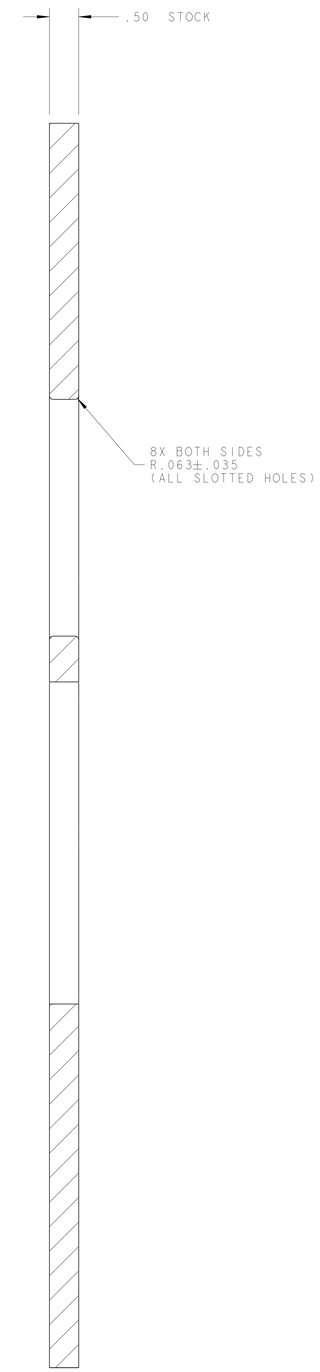

SECTION A-A

ERNEST ORLANDO LAWRENCE
BERKELEY NATIONAL LABORATORY
UNIVERSITY OF CALIFORNIA · BERKELEY

LHC IR FEEDBOX
CRYOGENICS
SUPPORT, D1 SIDE, DFBXD / DFBXH

MICROFILMED:	DWG. TYPE	SHOWN ON	SCALE: 1/2	DO NOT SCALE PRINTS
	ASSEM	-	SHEET 2 OF 2	
PATENT CLEAR:	DESIGN ACCT. NO.	CATEGORY CODE	DWG. NO.	SIZE / REV.
	Z5LCE2	LH2003	2514136	A

DWG. NO. 2514136 SHEET REV. A 2