ITEM	PART NO	REQD	DESCRIPTION	MATERIAL
3	251365	1	CERAMASEAL SEAT, 7 PIN	304L STAINLESS
2	-	7	4275-21-W CERAMASEAL INSUL.	-
1	-	7	14419-01-A HIGH VOLTAGE PLUG	-

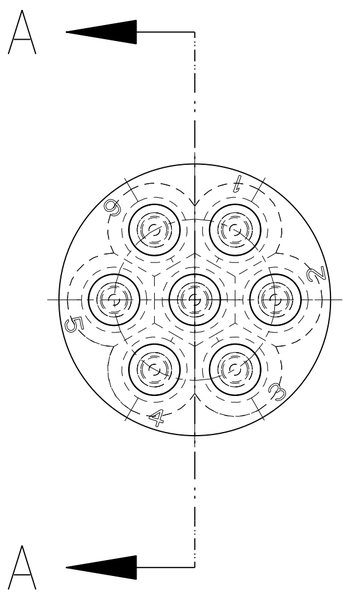

NOTES: UNLESS OTHERWISE SPECIFIED,

1. DIMENSIONS AND TOLERANCING PER ANSI Y14.5M-1982 UNITS ARE IN INCHES UNLESS OTHERWISE SPECIFIED.
2. USE OF SULFUR OR SILICONE BEARING OILS, LUBRICANTS, OR COOLANTS ARE STRICTLY PROHIBITED
3. USE OF RESIN OR RUBBER BONDED ADRASIVES UNDER POWER IS STRICTLY PROHIBITED. USE VITREOUS BONDED ABRASIVES ONLY.
4. VENDOR WELD SPECIFICATION SUBJECT TO LBNL APPROVAL.
5. CLEAN AFTER WELDING PER VENDOR SPECIFICATION; SUBJECT TO LBNL APPROVAL.
6. PROTECT FINISHED PART BY BAGGING OR SIMILAR METHOD TO PROTECT AND MAINTAIN CLEANLINESS DURING SHIPMENT AND STORAGE.
7. REQUEST CERAMASEAL TO PROVIDE 1.0 INCH ELECTRODE STICKOUT AS SHOWN ON SECTION A-A.

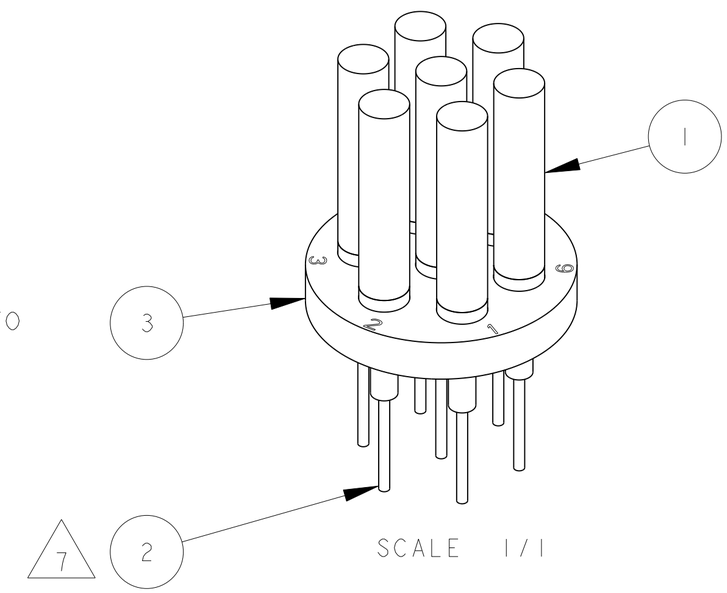

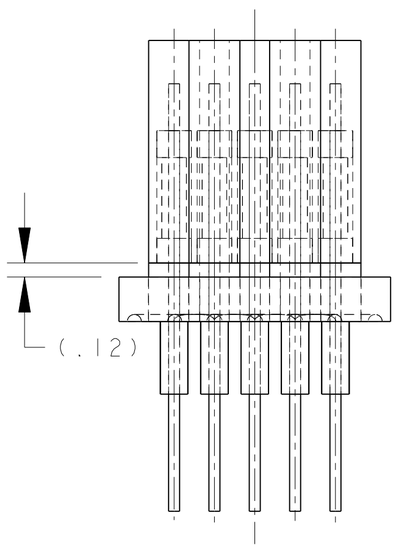

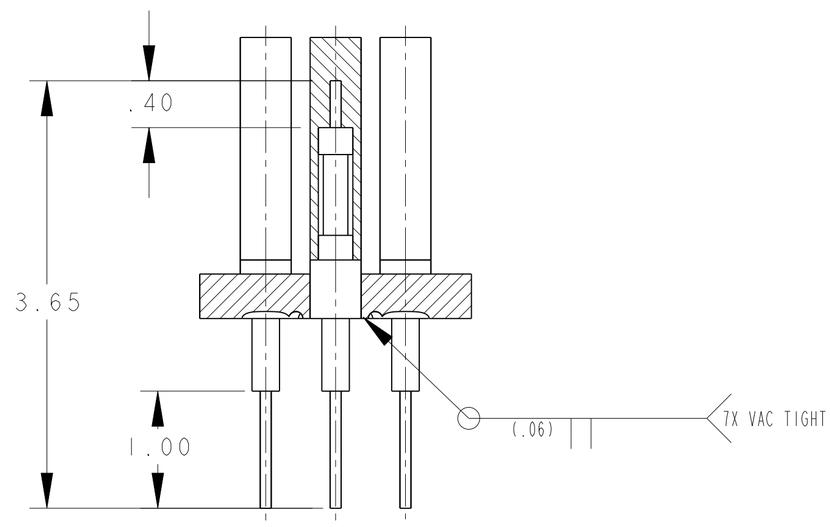

SECTION A - A

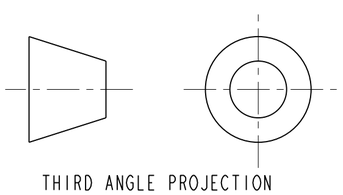

THIRD ANGLE PROJECTION

REV	DWG	CHK	ZONE	DATE	CHANGES
B	ARH	DPO		12/17/02	BOM DESCRIPTION CHANGE: ITEM 1 IS 14419-01-A HIGH VOLT. PLUG, WAS 4275-21-W, ITEM 2 IS 4275-21-W CERAMASEAL INSUL., WAS 4275-14-W
A	RLM	DPO		10-4-02	INITIAL RELEASE

UNLESS OTHERWISE SPECIFIED

TOLERANCES		
	X.X ± 0.1	FRAC. ± 1/64
	X.XX ± 0.03	Angles ± 1.00°
	X.XXX ± 0.010	FINISH 125 √(µin)

DO NOT SCALE PRINT

THREADS ARE CLASS 2
CHAMFER ENDS OF ALL SCREW TREADS 30°
CUT ROUND, 1.5 THREAD RELIEF ON MACHINED THREADS
BREAK EDGES .016 MAX. ON MACHINED WORK
REMOVE BURRS, WELD SPLATTER & LOOSE SCALE
IN ACCORDANCE WITH ASME Y14.5M & B46.1

SHOP ORDERS			
SER NO.	-		
ACCT NO.		NO. REQD	DATE ISSD -
DEL TO			DATE REQD -
SURFACE TREATMT	-		
IDENT METHOD	TAG		
PROJECT NUMBER	N/A		
PROJECT NAME	N/A		
DWG BY	KNOLLS		DATE 13-Sep-01
CHK BY	Jon Zbasnik		DATE 21-Apr-02
APR BY	Jon Zbasnik		DATE 21-Apr-02

ERNEST ORLANDO LAWRENCE BERKELEY NATIONAL LABORATORY
UNIVERSITY OF CALIFORNIA - BERKELEY

LHC IR FEEDBOX
ELECTRICAL
CERAMASEAL, 7 PIN ASSEMBLY

MICROFILMED:	DWG. TYPE	SHOWN ON	SCALE: 1/1	DO NOT SCALE PRINTS
	ASSEM	-	SHEET 1 OF 1	
PATENT CLEAR:	DESIGN ACCT. NO.	CATEGORY CODE	DWG. NO.	SIZE / REV.
	Z5LCE2	LH2004	2513663	B

Dwg. File: 251366 Model File: CERAMASEAL_2

Rev. 11/8/2000 JL Odenal

DWG. NO. 2513663 SIZE B REV. SH. 1