DWG. NO.	SIZE	REV.	SH.
2513614	A	1	

DESCRIPTION	MATERIAL	MAT. LOCATION
PLATE, 1.00" THICK	304L STAINLESS	-

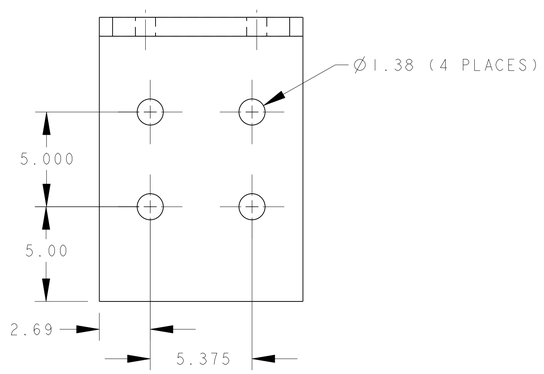

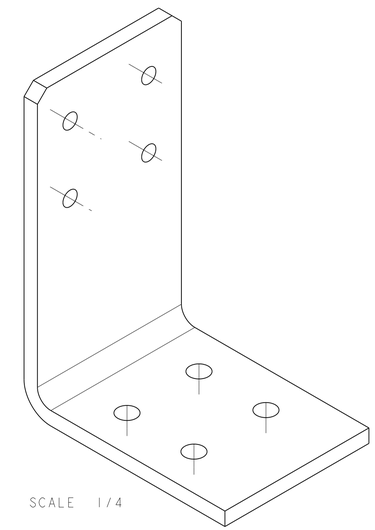

SCALE 1/4

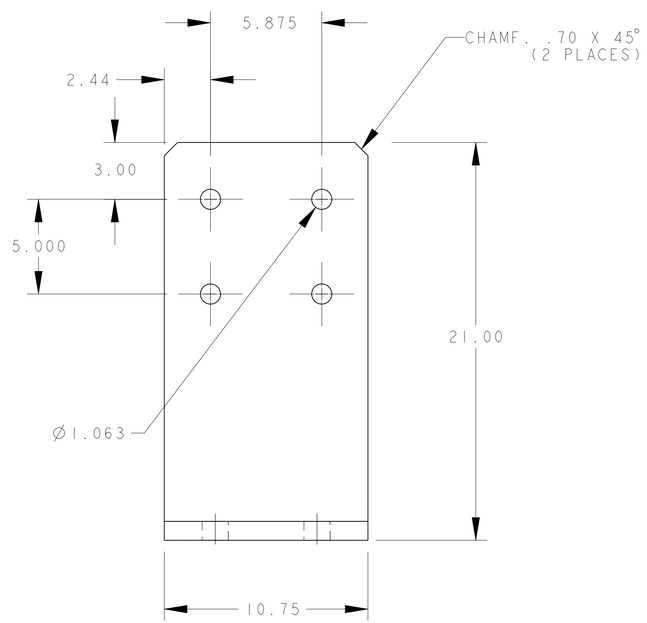

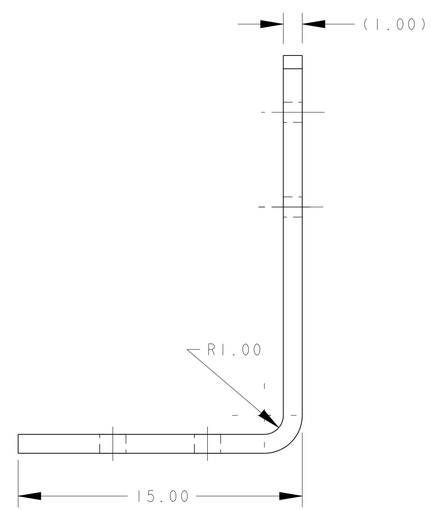

NOTES: UNLESS OTHERWISE SPECIFIED,

1) POSITIONAL TOLERANCES AND DATUM FEATURES OF SIZE APPLY REGARDLESS OF FEATURE SIZE.

2) THIS IS A CRYOGENIC/VACUUM COMPONENT. CLEAN PRIOR TO WELDING PER ENGINEERING SPECIFICATION (M). ALTERNATE METHODS SUBJECT TO LBNL APPROVAL.

3) USE OF SULFUR OR SILICONE BEARING OILS, LUBRICANTS OR COOLANTS ARE STRICTLY PROHIBITED.

4) USE OF RESIN OR RUBBER BONDED ABRASIVES UNDER POWER IS STRICTLY PROHIBITED. USE VITREOUS BONDED ABRASIVES ONLY.

5) PROTECT FINISHED PART BY BAGGING OR SIMILAR METHOD PROTECT AND MAINTAIN CLEANLINESS DURING SHIPMENT AND STORAGE.)

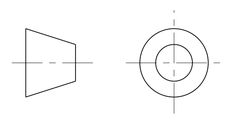

THIRD ANGLE PROJECTION

REV	DWG	CHK	ZONE	DATE	CHANGES
A	MJK	DPO		9/11/02	INITIAL RELEASE

UNLESS OTHERWISE SPECIFIED

TOLERANCES		
	X.X ± 0.1	FRAC. ± 1/64
	X.XX ± 0.03	Angles ± 1.00°
	X.XXX ± 0.010	FINISH 125 √ (μin)

DO NOT SCALE PRINT

THREADS ARE CLASS 2

CHAMFER ENDS OF ALL SCREW TREADS 30°

CUT ROUND, 1.5 THREAD RELIEF ON MACHINED THREADS

BREAK EDGES .016 MAX. ON MACHINED WORK

REMOVE BURRS, WELD SPLATTER & LOOSE SCALE

IN ACCORDANCE WITH ASME Y14.5M & B46.1

SHOP ORDERS

ACCT NO.	NO. REQD	SER NO.	-
DEL TO		DATE ISSD	-
		DATE REQD	-
SURFACE TREATMT			
IDENT METHOD	TAG		
PROJECT NUMBER	N/A		
PROJECT NAME	N/A		
DWG BY	KNOLLS	DATE	8/7/02
CHK BY	OSHATZ	DATE	8/10/02
APR BY	OSHATZ	DATE	8/10/02

ERNEST ORLANDO LAWRENCE
BERKELEY NATIONAL LABORATORY
UNIVERSITY OF CALIFORNIA - BERKELEY

LHC IR FEEDBOX
MAJOR ASSEMBLY
THRUST LOAD BUMPER BRACKET

MICROFILMED:	DWG. TYPE	SHOWN ON	SCALE: 1/4	DO NOT SCALE PRINTS
	PART		SHEET 1 OF 1	
PATENT CLEAR:	DESIGN ACCT. NO.	CATEGORY CODE	DWG. NO.	SIZE / REV.
	Z5LCE2	LH2001	2513614	A

Dwg. File: 2513614_MAJOR2.FIG_2513614