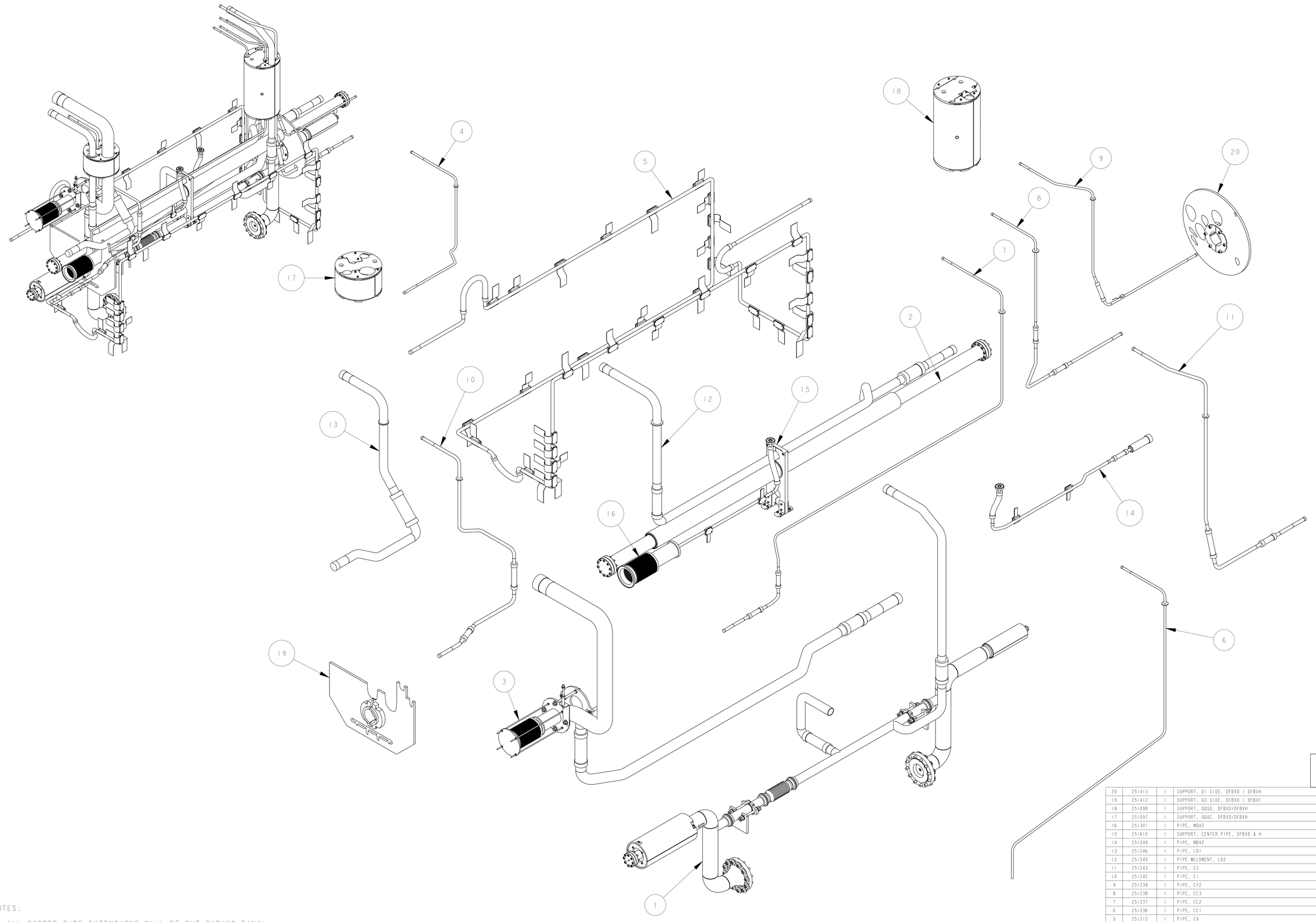

NOTES:

1. ALL CAPPED PIPE EXTENSIONS WILL BE CUT DURING FINAL INSTALLATION OF THE FEEDBOX.
2. DIMENSIONS ARE IN INCHES [mm] UNLESS OTHERWISE SPECIFIED.
3. ALL PIPES TO BE INSULATED PER MLI SPECIFICATION PROVIDED BY VENDOR AND SUBJECT TO LBNL APPROVAL. IN LOCATIONS WHERE PIPES PASS THROUGH SUPPORT ASSEMBLIES, INSULATION IS TO BE WRAPPED WITH KAPTON TAPE FOR PROTECTION FROM ABRASION DURING THERMAL CYCLING.

ITEM	PART NO	REQD	DESCRIPTION	MATERIAL
20	251413	1	SUPPORT, D1 SIDE, DFBXD / DFBXH	NEMA G10
19	251412	1	SUPPORT, Q3 SIDE, DFBXA / DFBXF	NEMA G10
18	251098	1	SUPPORT, QQSD, DFBXD/DFBXH	NEMA G10
17	251097	1	SUPPORT, QQSC, DFBXD/DFBXH	NEMA G10
16	251301	1	PIPE, MQX2	-
15	251610	1	SUPPORT, CENTER PIPE, DFBXD & H	-
14	251249	1	PIPE, MBX2	-
13	251246	1	PIPE, LD1	-
12	251245	1	PIPE WELDMENT, LD2	-
11	251243	1	PIPE, E2	-
10	251242	1	PIPE, E1	-
9	251239	1	PIPE, CY2	-
8	251238	1	PIPE, CC3	-
7	251237	1	PIPE, CC2	-
6	251236	1	PIPE, CC1	-
5	251212	1	PIPE, EX	-
4	251303	1	PIPE, CY1	-
3	251253	1	PIPE WELDMENT, XB	-
2	251855	1	V PIPE & JACKET ASSEMBLY	-
1	251247	1	PIPE WELDMENT, LD3 AND BUS DUCT	-

THIRD ANGLE PROJECTION

REV	DWG	CHK	ZONE	DATE	CHANGES
B	ARH	DPO		02/20/03	UPDATED SUBASSEMBLY VIEWS
A	MJK	DPO		11/25/02	INITIAL RELEASE

UNLESS OTHERWISE SPECIFIED
TOLERANCES: X.X ± 0.1 FRAC. ± 1/64; X.XX ± 0.03 Angles ± 1.00°; X.XXX ± 0.010 FINISH 125/ 1/64
DO NOT SCALE PRINT
THREADS ARE CLASS 2
CHAMFER ENDS OF ALL SCREW TREADS 30°
CUT ROUND, 1.5 THREAD RELIEF ON MACHINED THREADS
BREAK EDGES .016 MAX. ON MACHINED WORK
REMOVE BURRS, WELD SPLATTER & LOOSE SCALE
IN ACCORDANCE WITH ASME Y14.5M & B46.1

SHOP ORDERS
ACCT NO. | NO. REQD | DATE ISSD | DEL TO | DATE REQD
SURFACE TREATMT | IDENT METHOD TAG
PROJECT NUMBER N/A
PROJECT NAME N/A
DWG BY M KNOLLS DATE 13-Mar-02
CHK BY D.OSHATZ DATE 11/25/02
APR BY D.OSHATZ DATE 11/25/02

ERNEST ORLANDO LAWRENCE BERKELEY NATIONAL LABORATORY
UNIVERSITY OF CALIFORNIA - BERKELEY
LHC IR FEEDBOX
CRYOGENICS
PIPING DFBXD&H IP2,8 RH 24C362

MICROFILMED: | DWG. TYPE ASSEM | SHOWN ON 24C3626 | SCALE: 13/100 | DO NOT SCALE PRINTS
PATENT CLEAR: | DESIGN ACCT. NO. Z5LCE2 | CATEGORY CODE LH2003 | DWG. NO. 2512356 | SIZE B | REV. B
SHEET 1 OF 10

DWG. NO. 2512356 SIZE B REV. 1

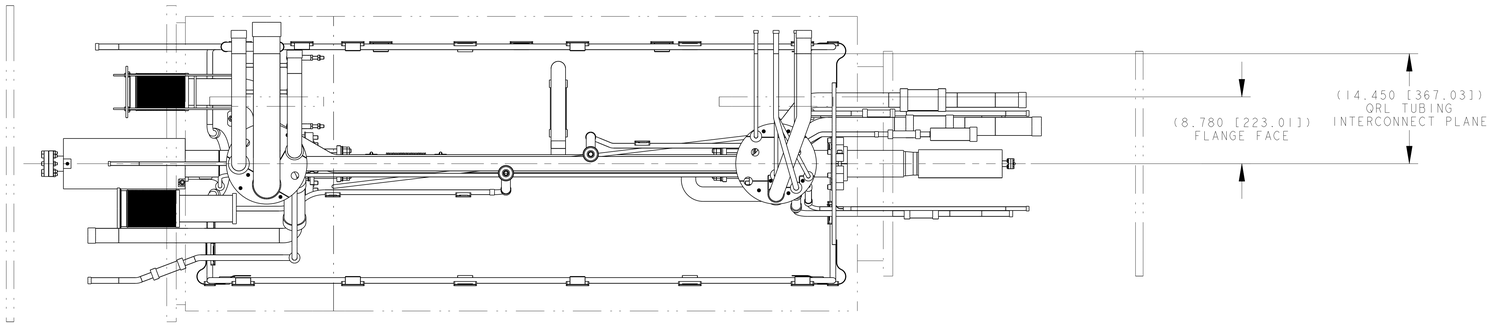

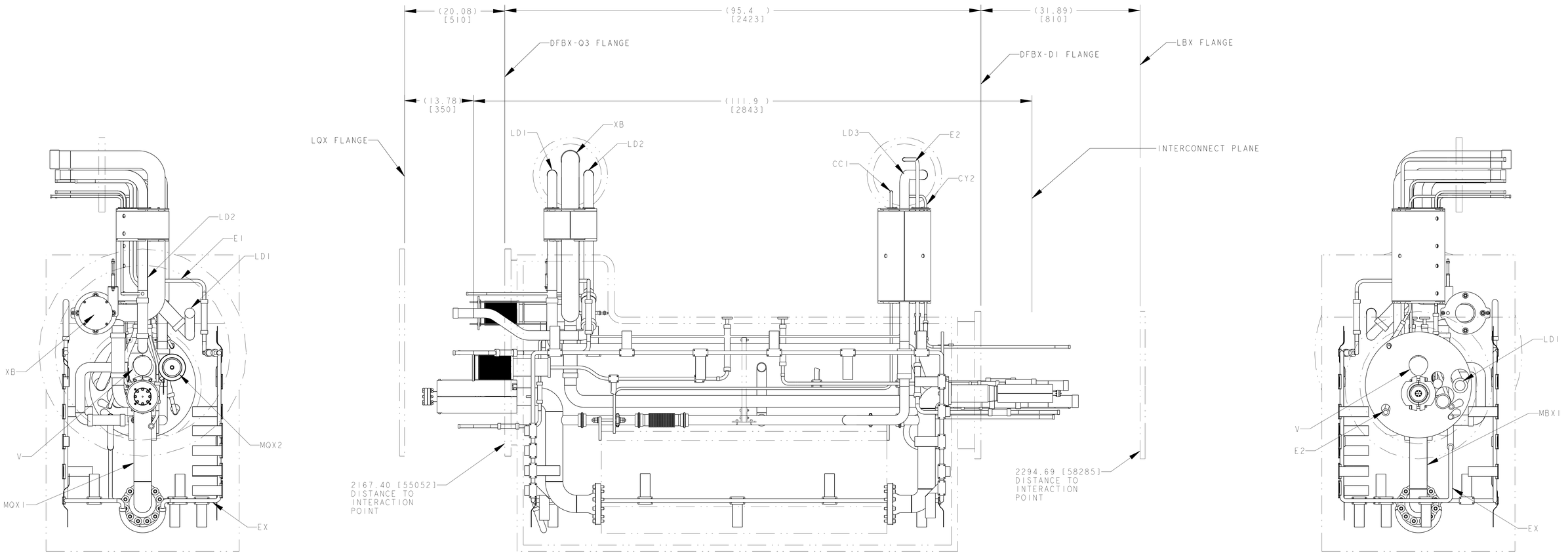

ERNEST ORLANDO LAWRENCE BERKELEY NATIONAL LABORATORY, UNIVERSITY OF CALIFORNIA - BERKELEY					
LHC IR FEEDBOX CRYOGENICS PIPING DFBXD&H IP2,8 RH 24C362					
MICROFILMED:	DWG. TYPE: ASSEM	SHOWN ON: 24C3626	SCALE: 1:3/100	DO NOT SCALE PRINTS	
			SHEET 2 OF 10		
PATENT CLEAR:	DESIGN ACCT. NO.: Z5LCE2	CATEGORY CODE: LH2003	DWG. NO.: 2512356	SIZE: B	REV.

DWG. NO. 2512356 SIZE B SH. 2

INSTRUMENTATION LINES

SHOWN FOR REFERENCE ONLY
NOTE: ALL WELDS MUST LEAVE TUBE
INTERIOR BURR FREE

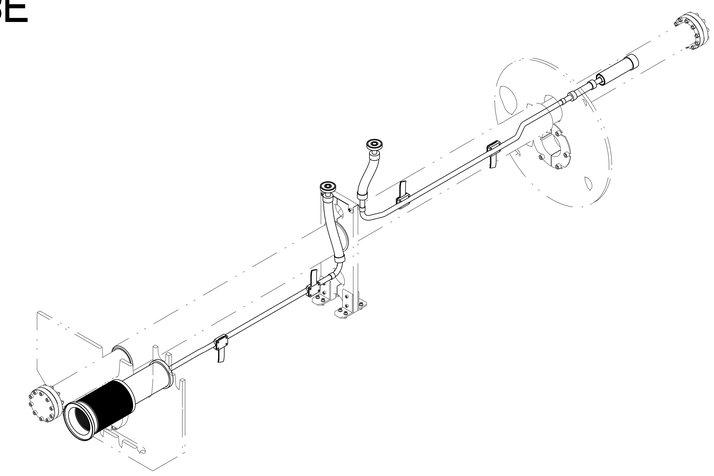

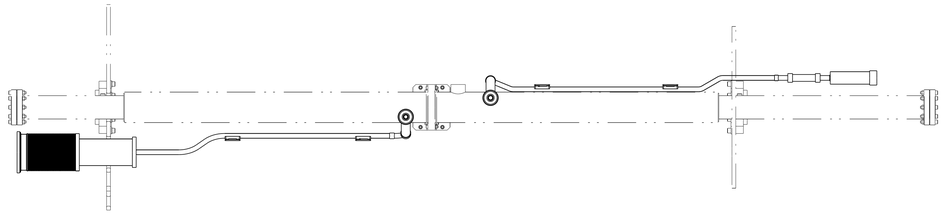

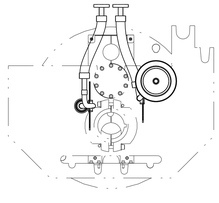

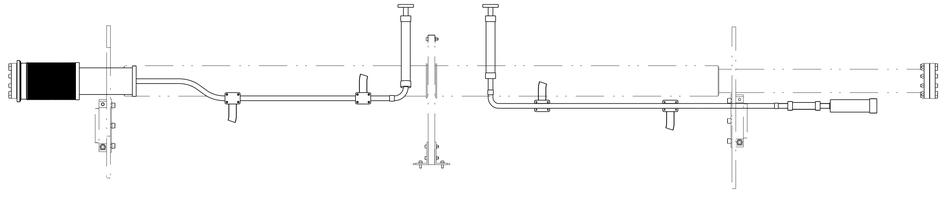

ERNEST ORLANDO LAWRENCE BERKELEY NATIONAL LABORATORY UNIVERSITY OF CALIFORNIA - BERKELEY				
LHC IR FEEDBOX CRYOGENICS PIPING DFBXD&H IP2,8 RH 24C362				
MICROFILMED:	DWG. TYPE: ASSEM	SHOWN ON: 24C3626	SCALE: 1/2 1/100	DO NOT SCALE PRINTS
			SHEET 3 OF 10	
PATENT CLEAR:	DESIGN ACCT. NO.: Z5LCE2	CATEGORY CODE: LH2003	DWG. NO.: 2512356	SIZE: B / REV.: B

DWG. NO. 2512356 | SIZE: B | SHT: 3

LD LINES

SHOWN FOR REFERENCE ONLY

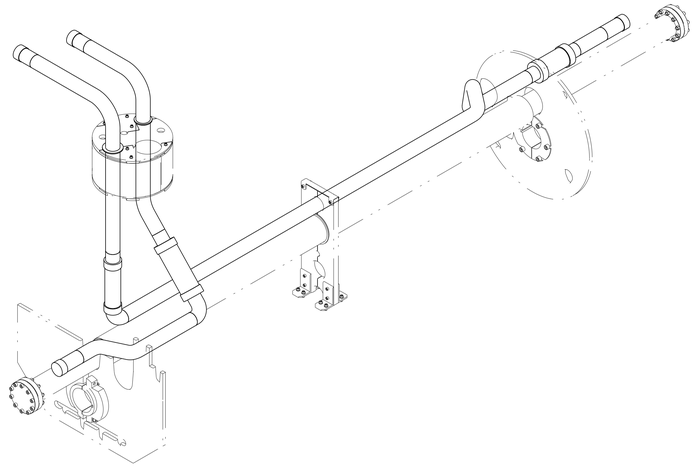

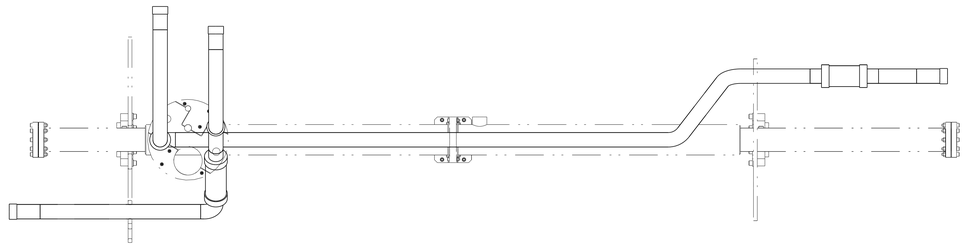

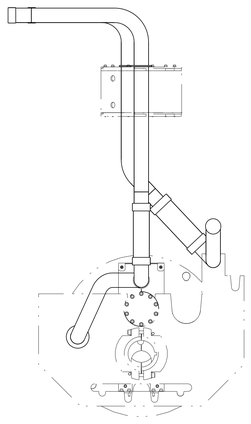

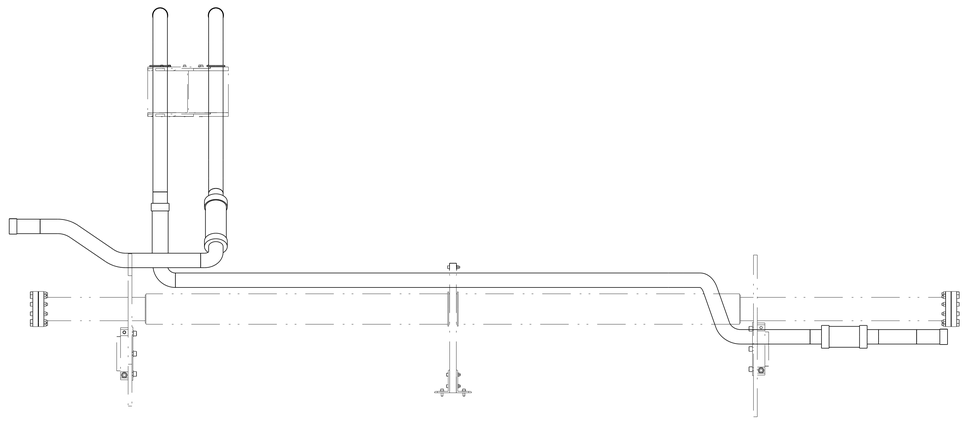

ERNEST ORLANDO LAWRENCE
BERKELEY NATIONAL LABORATORY
UNIVERSITY OF CALIFORNIA - BERKELEY

LHC IR FEEDBOX
CRYOGENICS
PIPING DFBXD&H IP2,8 RH 24C362

MICROFILMED:	DWG. TYPE: ASSEM	SHOWN ON: 24C3626	SCALE: 1:3/100	DO NOT SCALE PRINTS
			SHEET 4 OF 10	
PATENT CLEAR:	DESIGN ACCT. NO.: Z5LCE2	CATEGORY CODE: LH2003	DWG. NO.: 2512356	SIZE: B / REV.

DWG. NO. 2512356 SIZE B REV. 4

CC LINES

SHOWN FOR REFERENCE ONLY

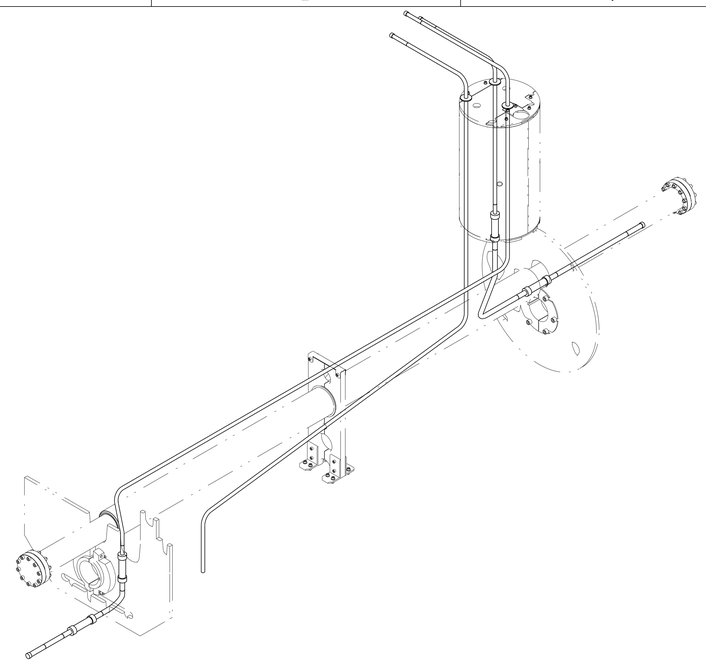

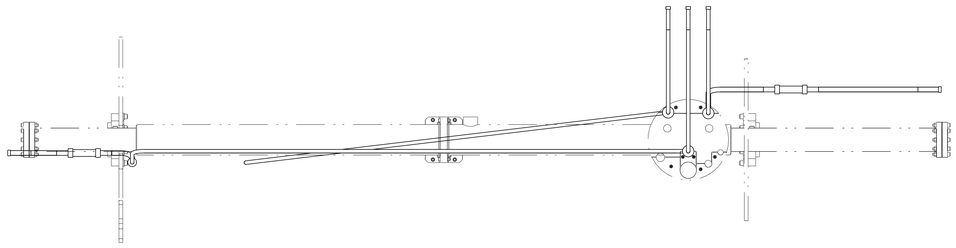

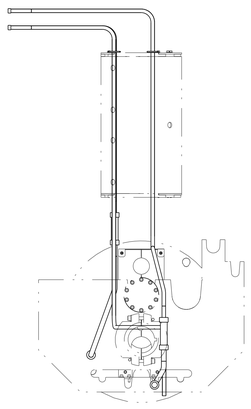

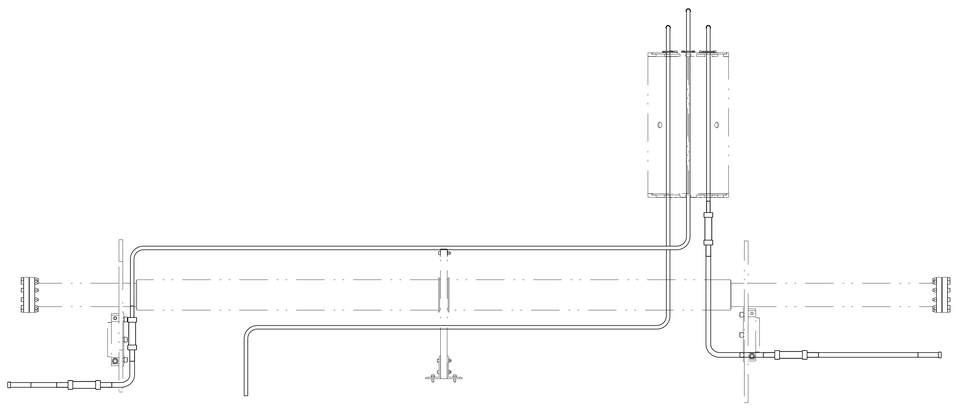

ERNEST ORLANDO LAWRENCE
BERKELEY NATIONAL LABORATORY
UNIVERSITY OF CALIFORNIA - BERKELEY

LHC IR FEEDBOX
CRYOGENICS
PIPING DFBXD&H IP2,8 RH 24C362

MICROFILMED:	DWG. TYPE: ASSEM	SHOWN ON: 24C3626	SCALE: 1:3/100	DO NOT SCALE PRINTS
PATENT CLEAR:	DESIGN ACCT. NO.: Z5LCE2	CATEGORY CODE: LH2003	DWG. NO.: 2512356	SIZE: B / REV.

SHEET 5 OF 10

DWG. NO. 2512356 | SIZE | REV. | B | SH. | 5

E1 & E2 LINES

SHOWN FOR REFERENCE ONLY

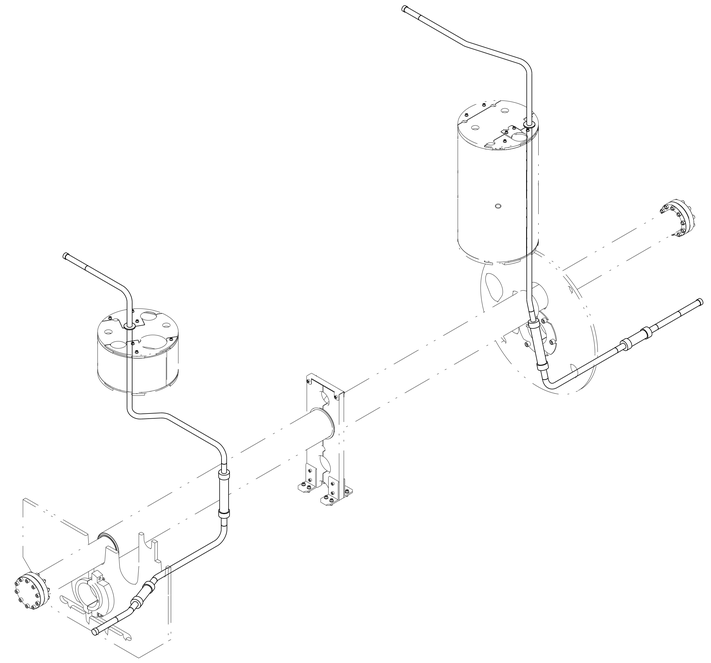

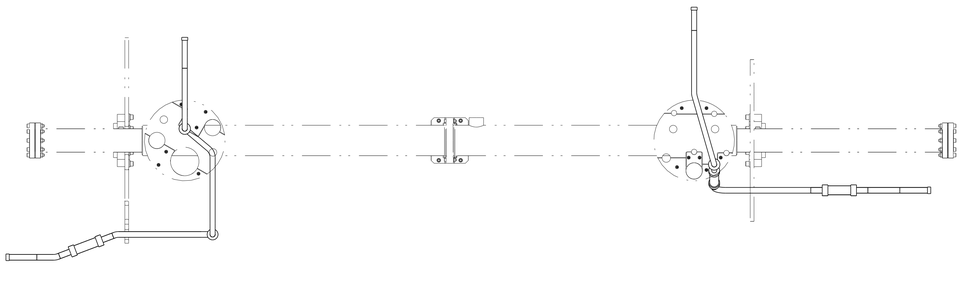

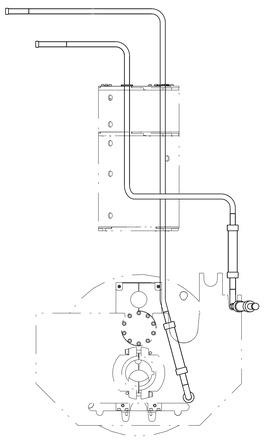

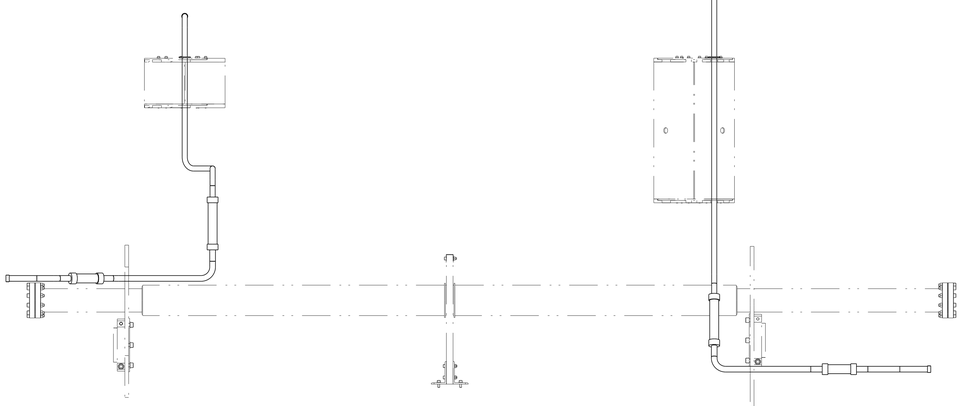

ERNEST ORLANDO LAWRENCE BERKELEY NATIONAL LABORATORY UNIVERSITY OF CALIFORNIA - BERKELEY				
LHC IR FEEDBOX CRYOGENICS PIPING DFBXD&H IP2,8 RH 24C362				
MICROFILMED:	DWG. TYPE: ASSEM	SHOWN ON: 24C3626	SCALE: 1:3/100	DO NOT SCALE PRINTS
			SHEET 6 OF 10	
PATENT CLEAR:	DESIGN ACCT. NO.: Z5LCE2	CATEGORY CODE: LH2003	DWG. NO.: 2512356	SIZE: B / REV.

DWG. NO. 2512356 SIZE B REV. 6

EX LINE

SHOWN FOR REFERENCE ONLY

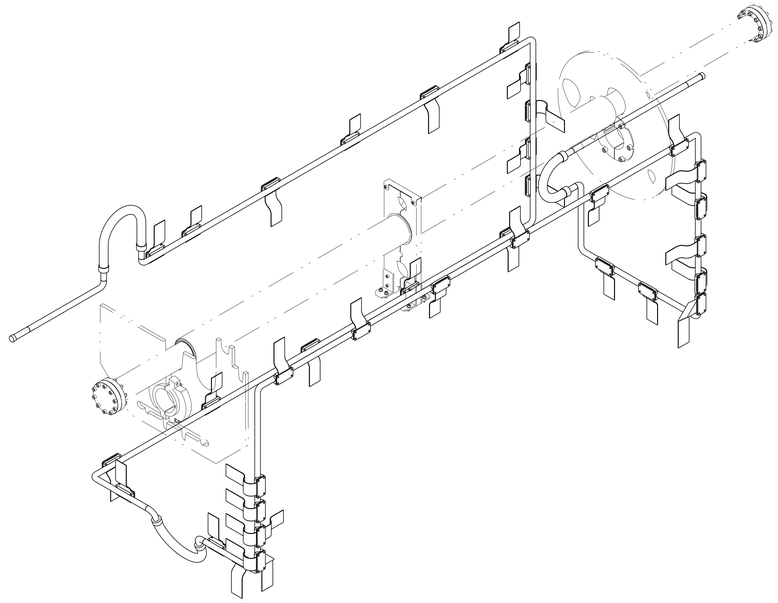

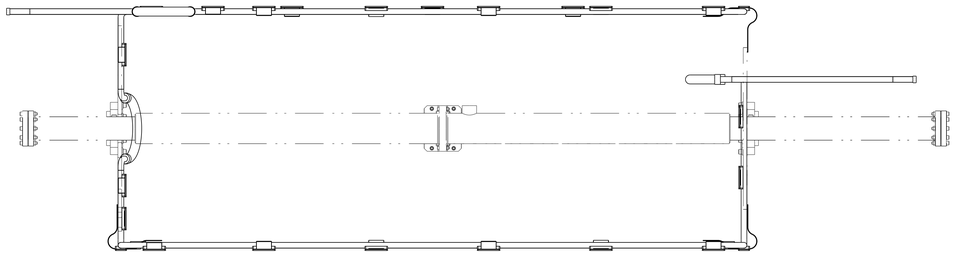

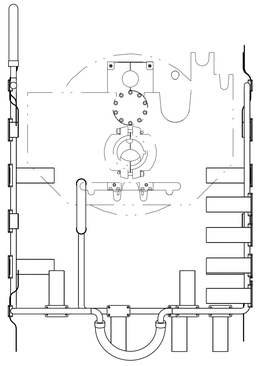

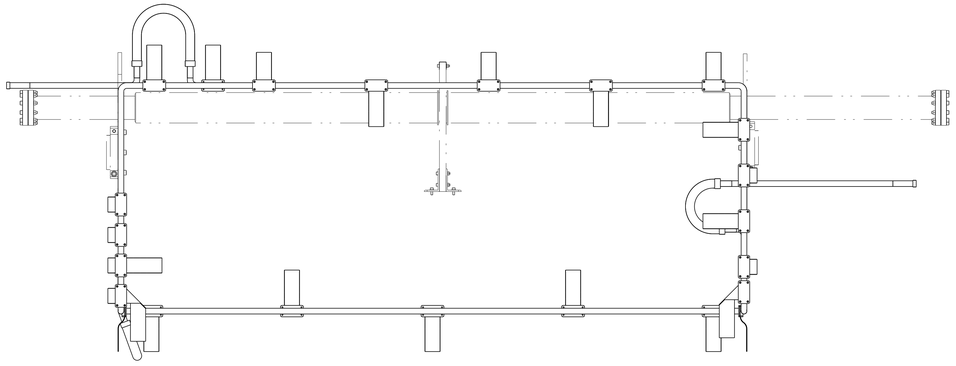

ERNEST ORLANDO LAWRENCE
BERKELEY NATIONAL LABORATORY
UNIVERSITY OF CALIFORNIA - BERKELEY

LHC IR FEEDBOX
CRYOGENICS
PIPING DFBXD&H IP2,8 RH 24C362

MICROFILMED:	DWG. TYPE	SHOWN ON	SCALE: 13/100	DO NOT SCALE PRINTS
	ASSEM	24C3626	SHEET 7 OF 10	
PATENT CLEAR:	DESIGN ACCT. NO.	CATEGORY CODE	DWG. NO.	SIZE / REV.
	Z5LCE2	LH2003	2512356	B

DWG. NO. 2512356 SIZE B REV. 7

XB & CY LINES

SHOWN FOR REFERENCE ONLY

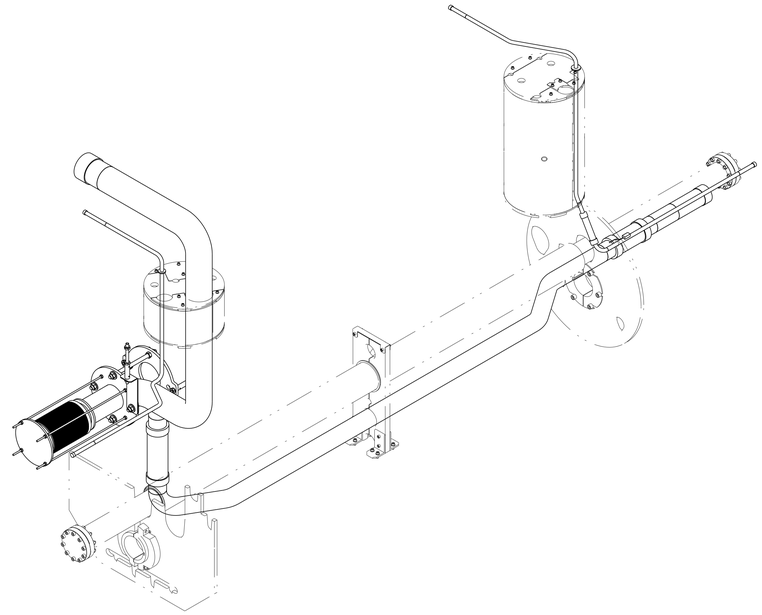

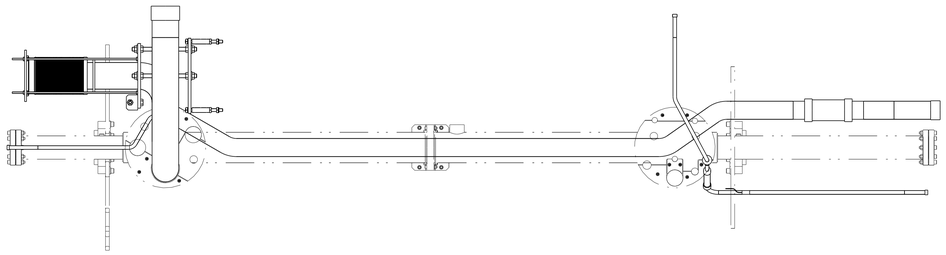

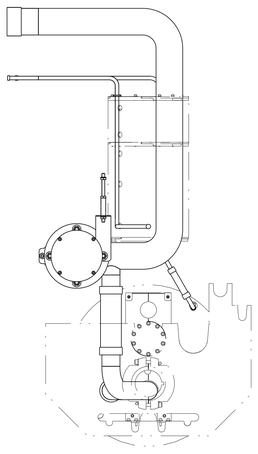

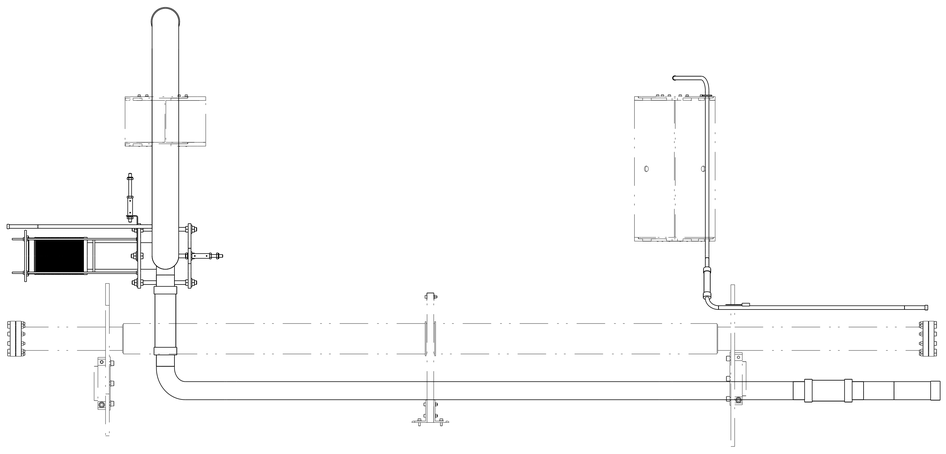

ERNEST ORLANDO LAWRENCE
BERKELEY NATIONAL LABORATORY
UNIVERSITY OF CALIFORNIA - BERKELEY

LHC IR FEEDBOX
CRYOGENICS
PIPING DFBXD&H IP2,8 RH 24C362

MICROFILMED:	DWG. TYPE: ASSEM	SHOWN ON: 24C3626	SCALE: 1:3/100	DO NOT SCALE PRINTS
			SHEET 8 OF 10	
PATENT CLEAR:	DESIGN ACCT. NO.: Z5LCE2	CATEGORY CODE: LH2003	DWG. NO.: 2512356	SIZE: B / REV.

DWG. NO. 2512356 SIZE B REV. 8

BEAM TUBE

SHOWN FOR REFERENCE ONLY

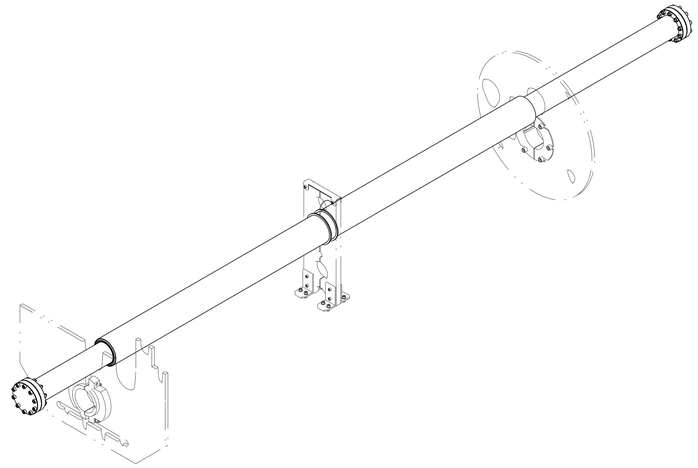

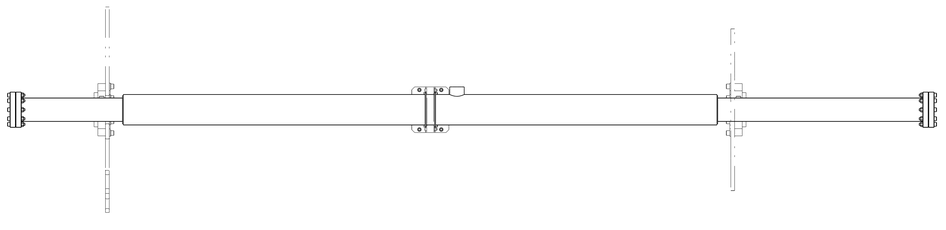

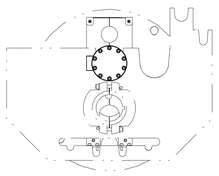

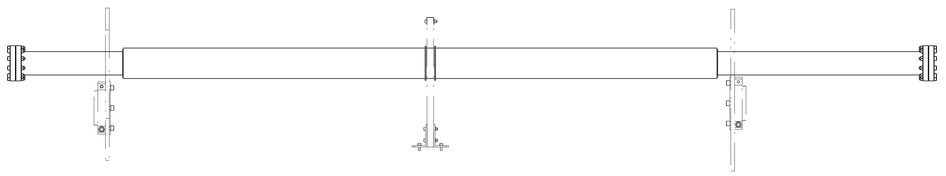

DWG. NO. 2512356 SIZE B REV. B SH. 9

ERNEST ORLANDO LAWRENCE
BERKELEY NATIONAL LABORATORY
UNIVERSITY OF CALIFORNIA - BERKELEY

LHC IR FEEDBOX
CRYOGENICS
PIPING DFBXD&H IP2,8 RH 24C362

MICROFILMED:	DWG. TYPE: ASSEM	SHOWN ON: 24C3626	SCALE: 1:3/100	DO NOT SCALE PRINTS
			SHEET 9 OF 10	
PATENT CLEAR:	DESIGN ACCT. NO.: Z5LCE2	CATEGORY CODE: LH2003	DWG. NO.: 2512356	SIZE: B / REV.:

BUS DUCT ASSEMBLY

SHOWN FOR REFERENCE ONLY

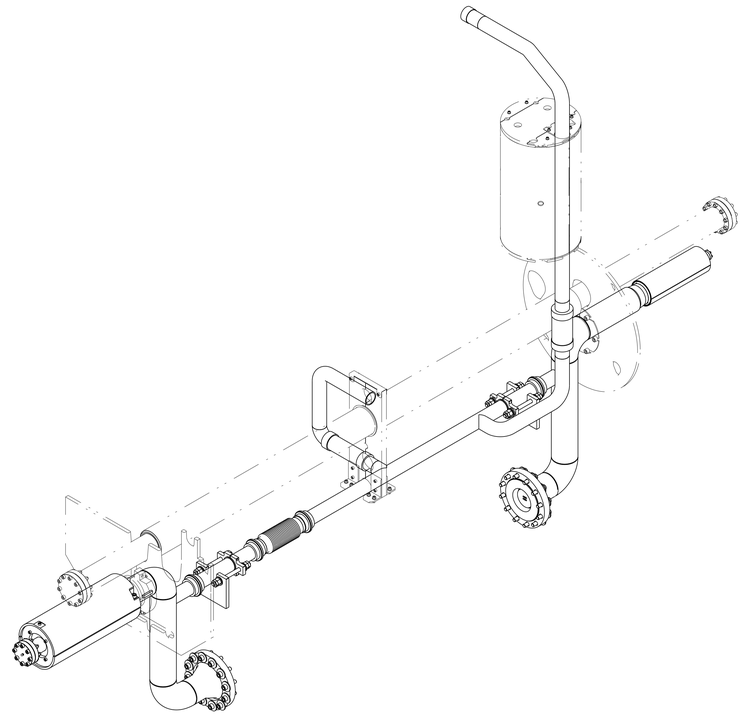

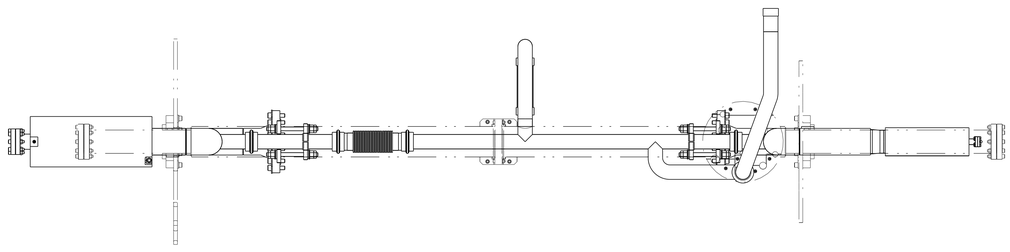

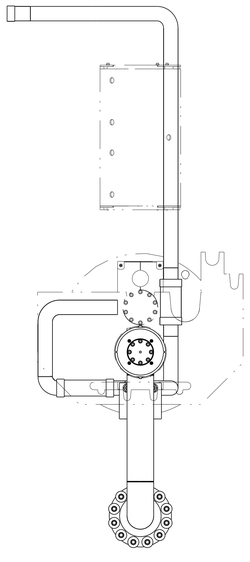

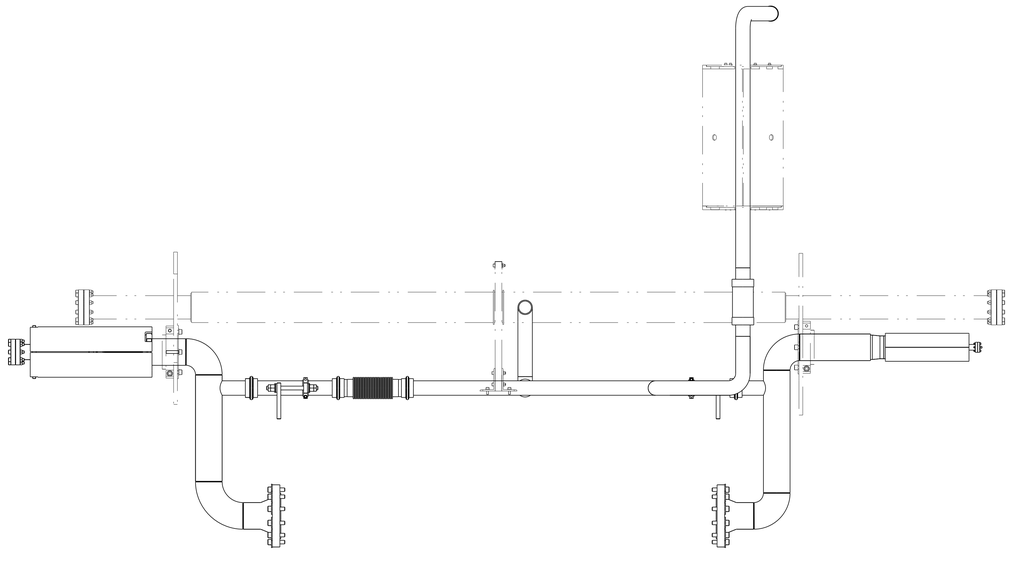

ERNEST ORLANDO LAWRENCE
BERKELEY NATIONAL LABORATORY
UNIVERSITY OF CALIFORNIA - BERKELEY

LHC IR FEEDBOX
CRYOGENICS
PIPING DFBXD&H IP2,8 RH 24C362

MICROFILMED:	DWG. TYPE	SHOWN ON	SCALE: 13/100	DO NOT SCALE PRINTS
	ASSEM	24C3626	SHEET 10 OF 10	
PATENT CLEAR:	DESIGN ACCT. NO.	CATEGORY CODE	DWG. NO.	SIZE / REV.
	Z5LCE2	LH2003	2512356	B

DWG. NO. 2512356 SIZE B REV. 10