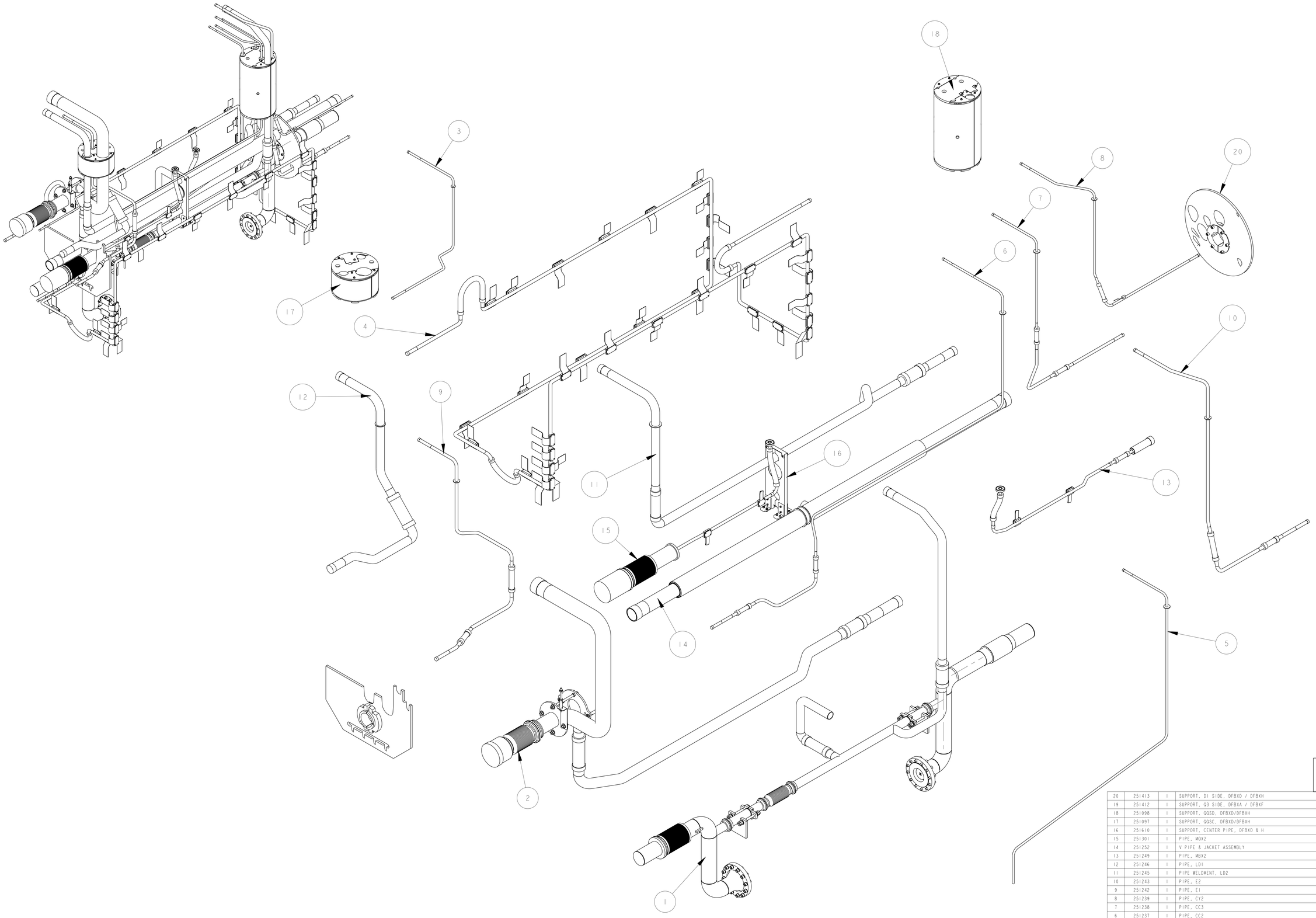

ITEM	PART NO	REQD	DESCRIPTION	MATERIAL
20	251413	1	SUPPORT, D1 SIDE, DFBXD / DFBXH	NEMA G10
19	251412	1	SUPPORT, Q3 SIDE, DFBXA / DFBXF	NEMA G10
18	251098	1	SUPPORT, QQSD, DFBXD/DFBXH	NEMA G10
17	251097	1	SUPPORT, QQSC, DFBXD/DFBXH	NEMA G10
16	251610	1	SUPPORT, CENTER PIPE, DFBXD & H	-
15	251301	1	PIPE, MQX2	-
14	251252	1	V PIPE & JACKET ASSEMBLY	-
13	251249	1	PIPE, MBX2	-
12	251246	1	PIPE, LD1	-
11	251245	1	PIPE WELDMENT, LD2	-
10	251243	1	PIPE, E2	-
9	251242	1	PIPE, E1	-
8	251239	1	PIPE, CY2	-
7	251238	1	PIPE, CC3	-
6	251237	1	PIPE, CC2	-
5	251236	1	PIPE, CC1	-
4	251212	1	PIPE, EX	-
3	251303	1	PIPE, CY1	-
2	251253	1	PIPE WELDMENT, XB	-
1	251247	1	PIPE WELDMENT, LD3 AND BUS DUCT	-

THIRD ANGLE PROJECTION

REV	DWG	CHK	ZONE	DATE	CHANGES
A	MJK	DPO		11/25/02	INITIAL RELEASE

UNLESS OTHERWISE SPECIFIED

TOLERANCES: X.X ± 0.1 FRAC. ± 1/64; X.XX ± 0.03 Angles ± 1.00°; X.XXX ± 0.010 FINISH 125/ 1/1000

DO NOT SCALE PRINT

THREADS ARE CLASS 2
CHAMFER ENDS OF ALL SCREW THREADS 30°
CUT ROUND, 1.5 THREAD RELIEF ON MACHINED THREADS
BREAK EDGES .016 MAX. ON MACHINED WORK
REMOVE BURRS, WELD SPLATTER & LOOSE SCALE
IN ACCORDANCE WITH ASME Y14.5M & B46.1

SHOP ORDERS

ACCT NO. | NO. REQD | SER NO. - | DATE ISSD - | DEL TO | DATE REQD -

SURFACE TREATMT -
IDENT METHOD TAG
PROJECT NUMBER N/A
PROJECT NAME N/A
DWG BY M KNOLLS DATE 13-Mar-02
CHK BY D.OSHATZ DATE 11/25/02
APR BY D.OSHATZ DATE 11/25/02

ERNEST ORLANDO LAWRENCE
BERKELEY NATIONAL LABORATORY
UNIVERSITY OF CALIFORNIA - BERKELEY

LHC IR FEEDBOX
CRYOGENICS
PIPING DFBXD&H IP2,8 RH 24C362

MICROFILMED: | DWG. TYPE ASSEM | SHOWN ON 24C3626 | SCALE: 13/100 | DO NOT SCALE PRINTS
PATENT CLEAR: | DESIGN ACCT. NO. Z5LCE2 | CATEGORY CODE LH2003 | DWG. NO. 2512356 | SIZE A | REV. A

SHEET 1 OF 10

DWG. NO. 2512356 SIZE A REV. 1

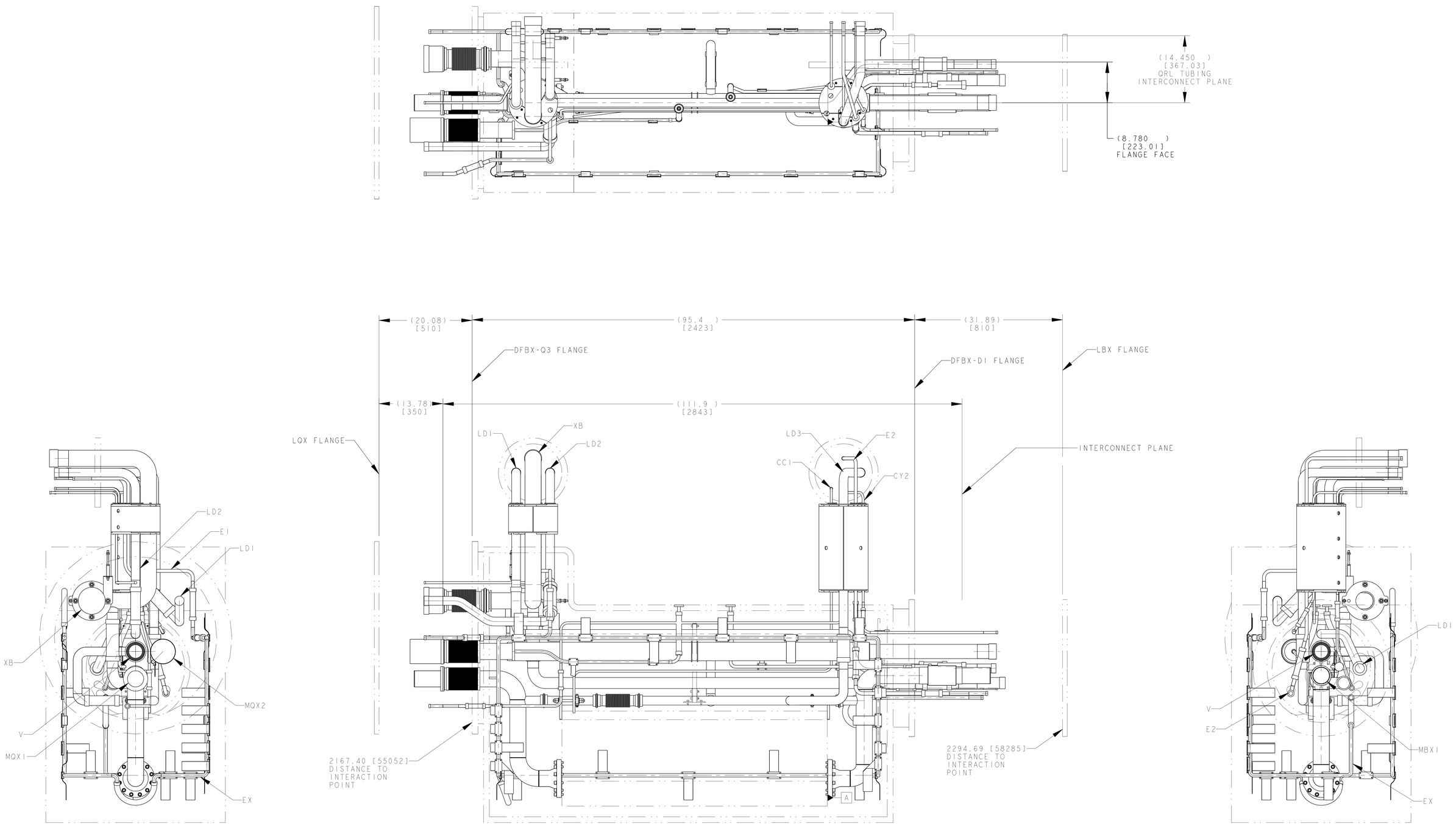

THIRD ANGLE PROJECTION

ERNEST ORLANDO LAWRENCE
BERKELEY NATIONAL LABORATORY
UNIVERSITY OF CALIFORNIA - BERKELEY

LHC IR FEEDBOX
CRYOGENICS
PIPING DFBXD&H IP2,8 RH 24C362

MICROFILMED:	DWG. TYPE	SHOWN ON	SCALE: 13/100	DO NOT SCALE PRINTS
	ASSEM	24C3626	SHEET 2 OF 10	
PATENT CLEAR:	DESIGN ACCT. NO.	CATEGORY CODE	DWG. NO.	SIZE / REV.
	Z5LCE2	LH2003	2512356	A

DWG. NO. 2512356 SIZE A REV. 2

INSTRUMENTATION LINES

SHOWN FOR REFERENCE ONLY
NOTE: ALL WELDS MUST LEAVE TUBE
INTERIOR BURR FREE

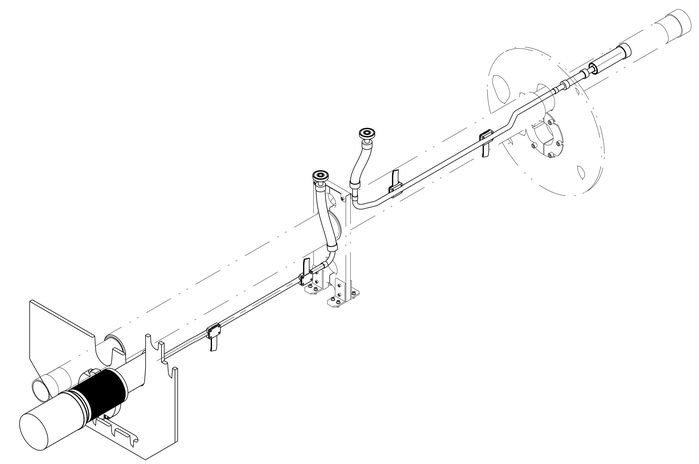

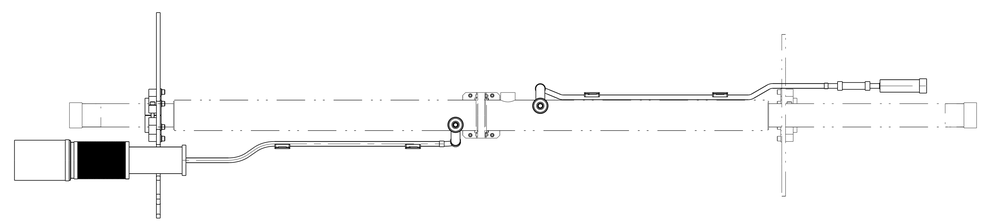

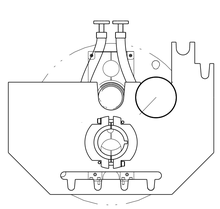

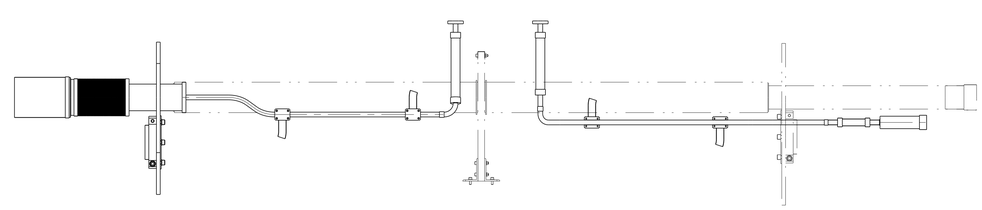

THIRD ANGLE PROJECTION

ERNEST ORLANDO LAWRENCE
BERKELEY NATIONAL LABORATORY
UNIVERSITY OF CALIFORNIA - BERKELEY

LHC IR FEEDBOX
CRYOGENICS
PIPING DFBXD&H IP2,8 RH 24C362

MICROFILMED:	DWG. TYPE	SHOWN ON	SCALE: 13/100	DO NOT SCALE PRINTS
	ASSEM	24C3626	SHEET 3 OF 10	
PATENT CLEAR:	DESIGN ACCT. NO.	CATEGORY CODE	DWG. NO.	SIZE / REV.
	Z5LCE2	LH2003	2512356	A

DWG. NO. 2512356 SIZE/REV. A 3

LD LINES

SHOWN FOR REFERENCE ONLY

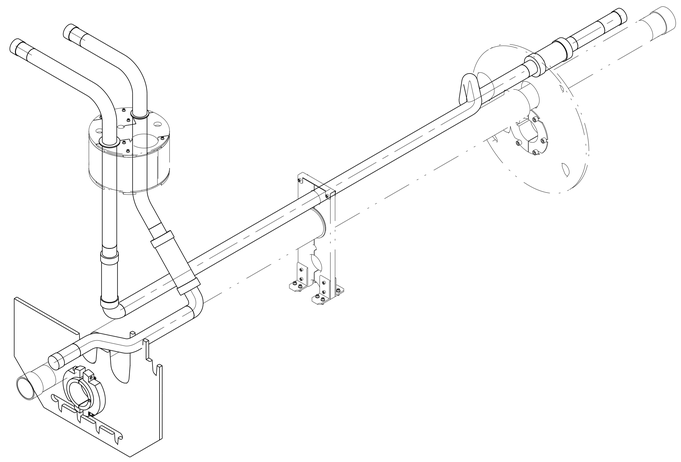

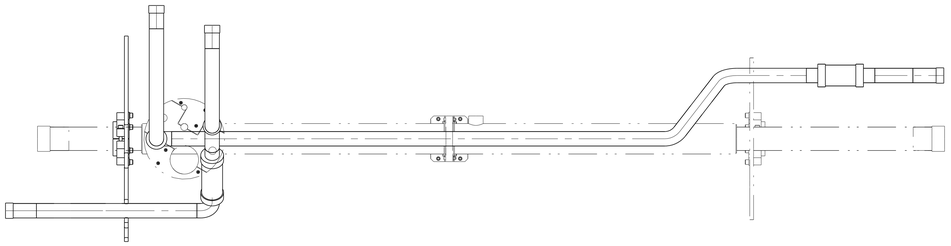

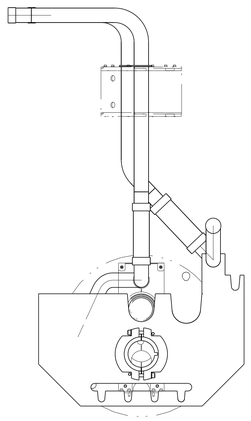

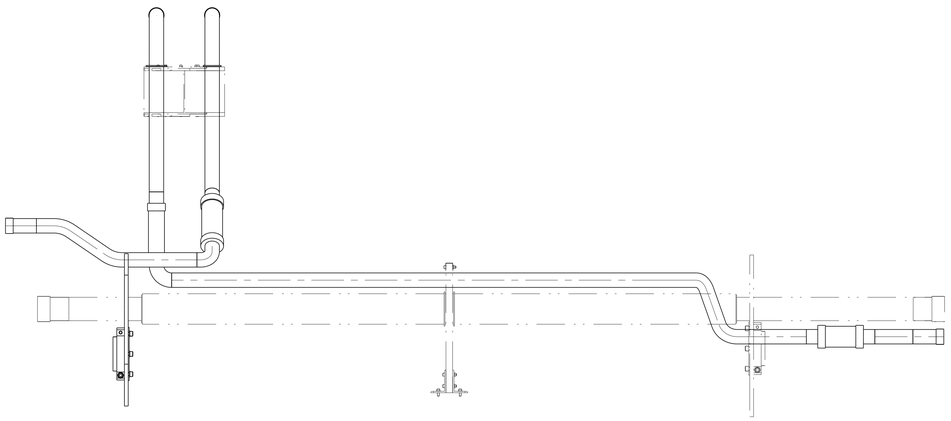

THIRD ANGLE PROJECTION

ERNEST ORLANDO LAWRENCE
BERKELEY NATIONAL LABORATORY
UNIVERSITY OF CALIFORNIA - BERKELEY

LHC IR FEEDBOX
CRYOGENICS
PIPING DFBXD&H IP2,8 RH 24C362

MICROFILMED:	DWG. TYPE	SHOWN ON	SCALE: 1:3/100	DO NOT SCALE PRINTS
	ASSEM	24C3626	SHEET 4 OF 10	
PATENT CLEAR:	DESIGN ACCT. NO.	CATEGORY CODE	DWG. NO.	SIZE / REV.
	Z5LCE2	LH2003	2512356	A

DWG. NO. 2512356 SIZE/REV. A SH. 4

CC LINES

SHOWN FOR REFERENCE ONLY

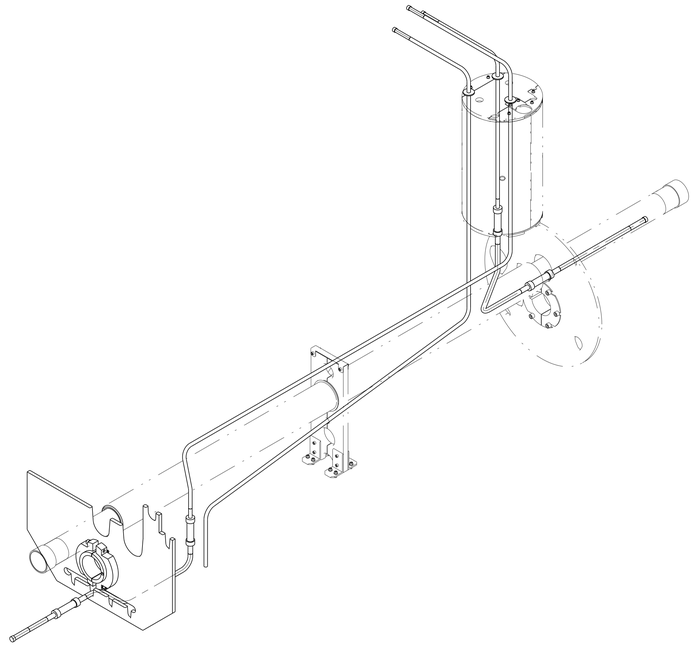

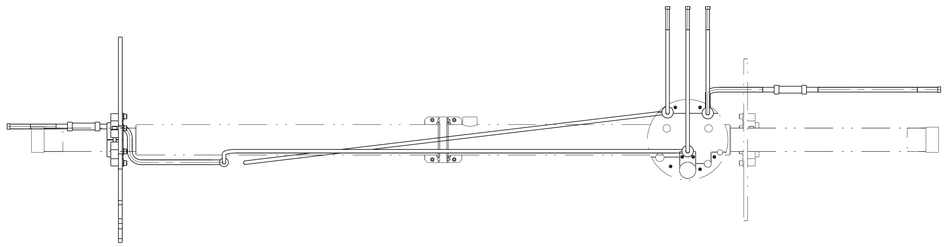

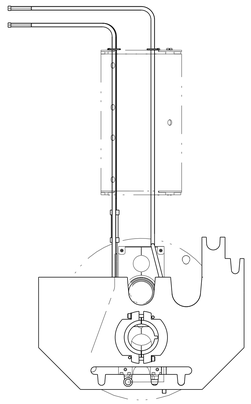

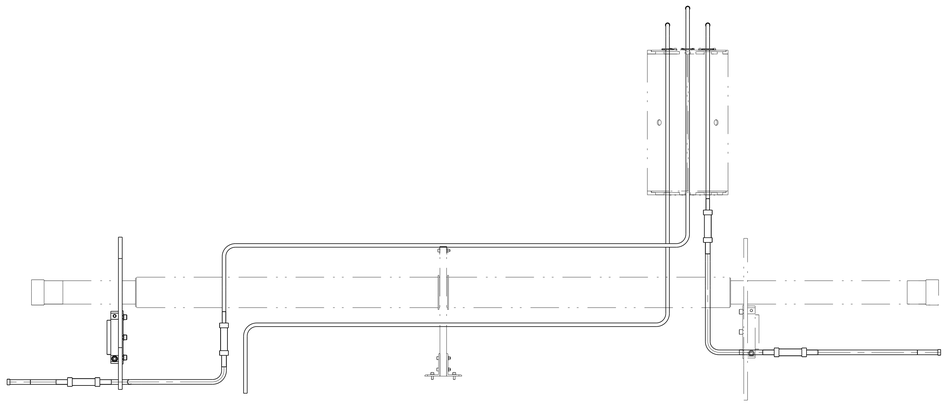

THIRD ANGLE PROJECTION

ERNEST ORLANDO LAWRENCE
BERKELEY NATIONAL LABORATORY
UNIVERSITY OF CALIFORNIA - BERKELEY

LHC IR FEEDBOX
CRYOGENICS
PIPING DFBXD&H IP2,8 RH 24C362

MICROFILMED:	DWG. TYPE	SHOWN ON	SCALE: 1:3/100	DO NOT SCALE PRINTS
	ASSEM	24C3626	SHEET 5 OF 10	
PATENT CLEAR:	DESIGN ACCT. NO.	CATEGORY CODE	DWG. NO.	SIZE / REV.
	Z5LCE2	LH2003	2512356	A

DWG. NO. 2512356 SIZE/REV. A SH. 5

E1 & E2 LINES

SHOWN FOR REFERENCE ONLY

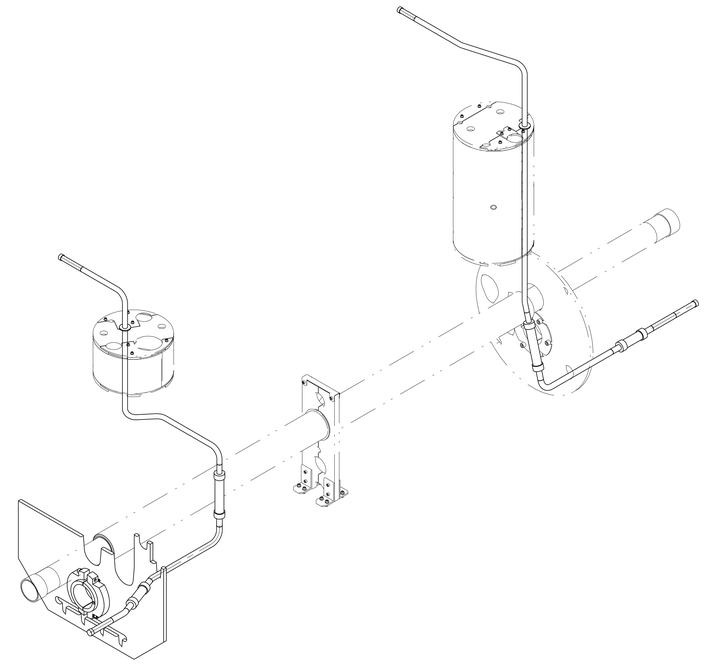

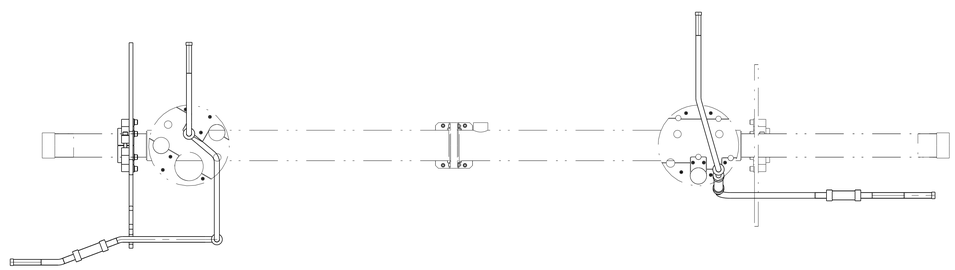

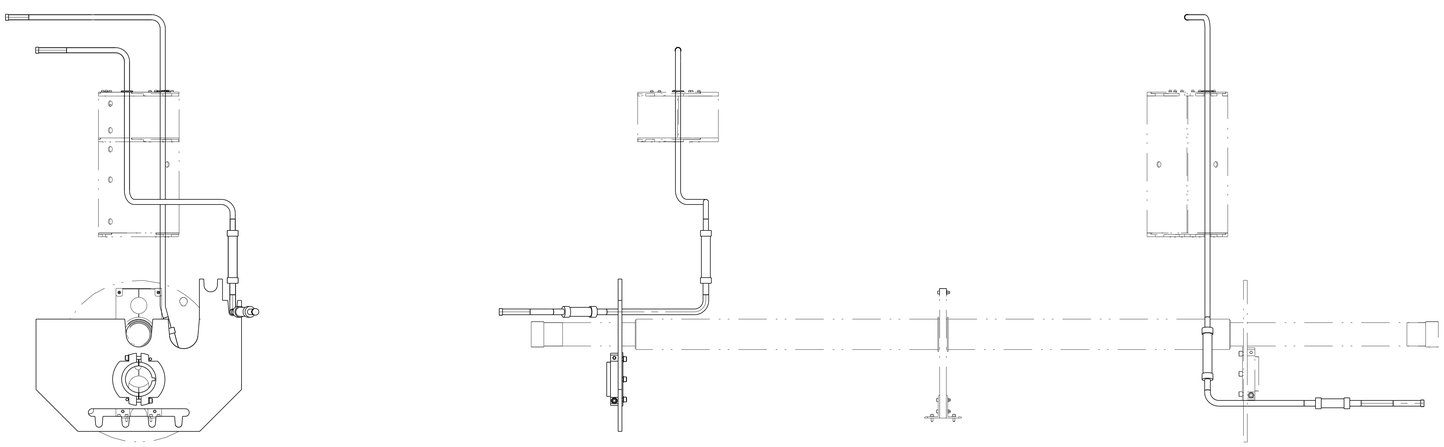

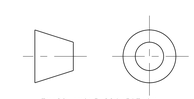

THIRD ANGLE PROJECTION

ERNEST ORLANDO LAWRENCE
BERKELEY NATIONAL LABORATORY
UNIVERSITY OF CALIFORNIA - BERKELEY

LHC IR FEEDBOX
CRYOGENICS
PIPING DFBXD&H IP2,8 RH 24C362

MICROFILMED:	DWG. TYPE	SHOWN ON	SCALE: 13/100	DO NOT SCALE PRINTS
	ASSEM	24C3626	SHEET 6 OF 10	
PATENT CLEAR:	DESIGN ACCT. NO.	CATEGORY CODE	DWG. NO.	SIZE / REV.
	Z5LCE2	LH2003	2512356	A

DWG. NO. 2512356 SIZE A REV. 6

EX LINE

SHOWN FOR REFERENCE ONLY

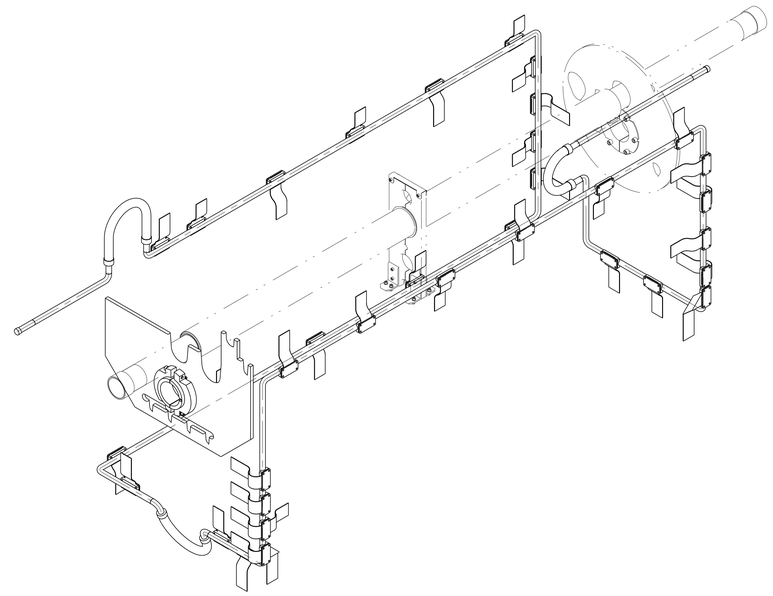

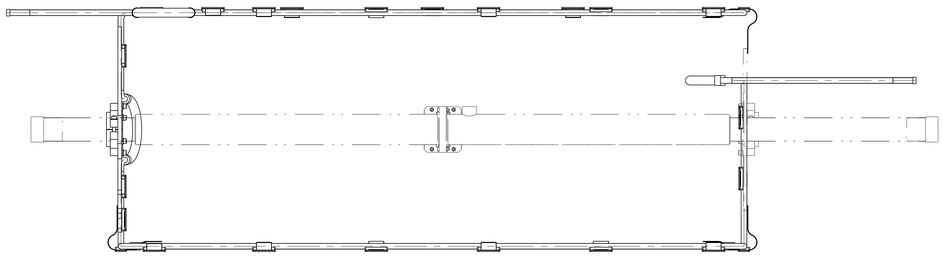

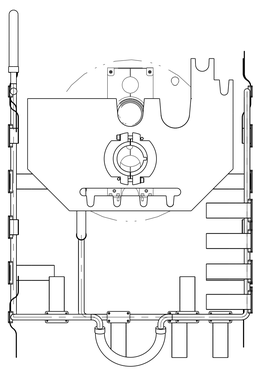

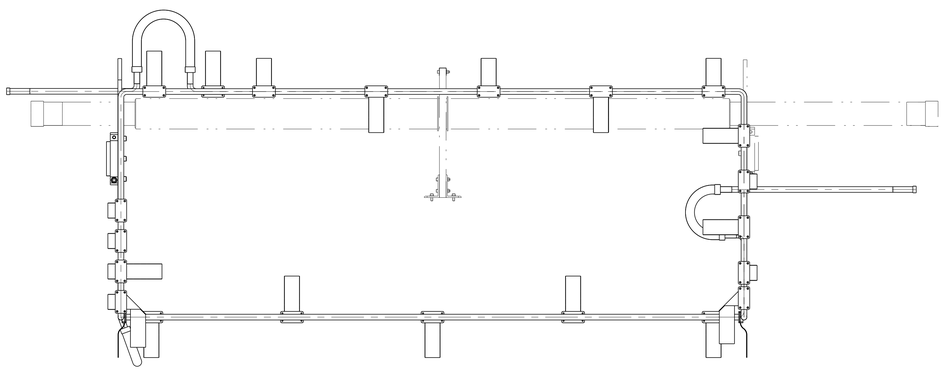

THIRD ANGLE PROJECTION

ERNEST ORLANDO LAWRENCE
BERKELEY NATIONAL LABORATORY
UNIVERSITY OF CALIFORNIA - BERKELEY

LHC IR FEEDBOX
CRYOGENICS
PIPING DFBXD&H IP2,8 RH 24C362

MICROFILMED:	DWG. TYPE	SHOWN ON	SCALE: 1:3/100	DO NOT SCALE PRINTS
	ASSEM	24C3626	SHEET 7 OF 10	
PATENT CLEAR:	DESIGN ACCT. NO.	CATEGORY CODE	DWG. NO.	SIZE / REV.
	Z5LCE2	LH2003	2512356	A

DWG. NO. 2512356 SIZE/REV. A SH. 7

XB & CY LINES

SHOWN FOR REFERENCE ONLY

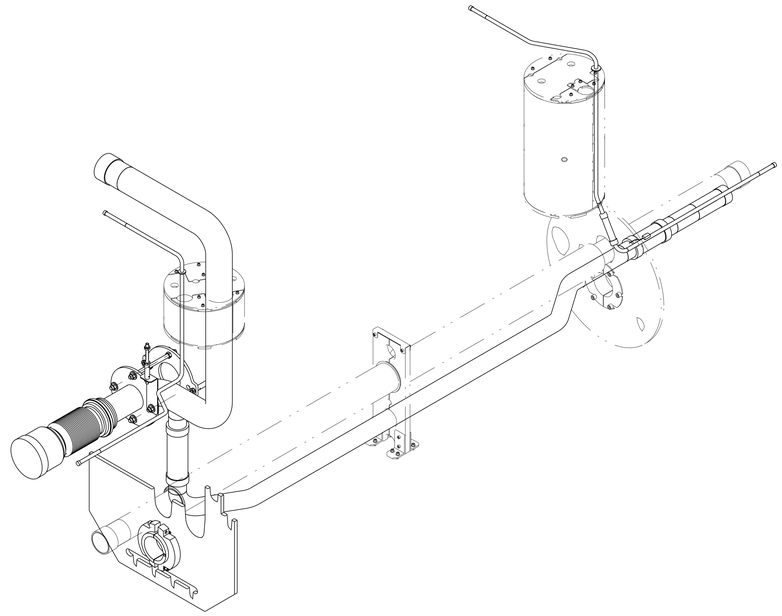

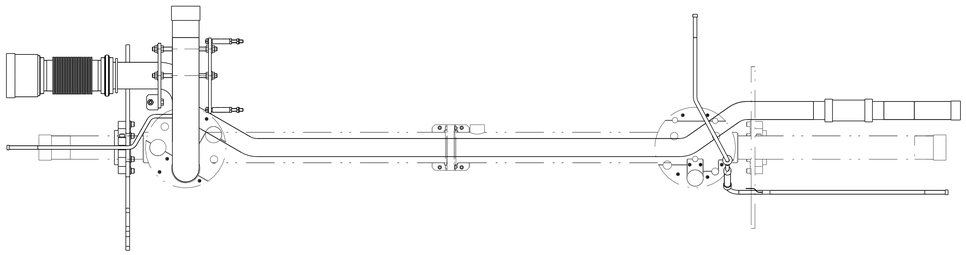

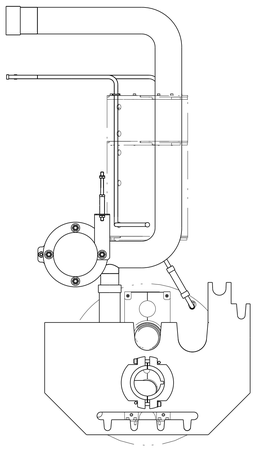

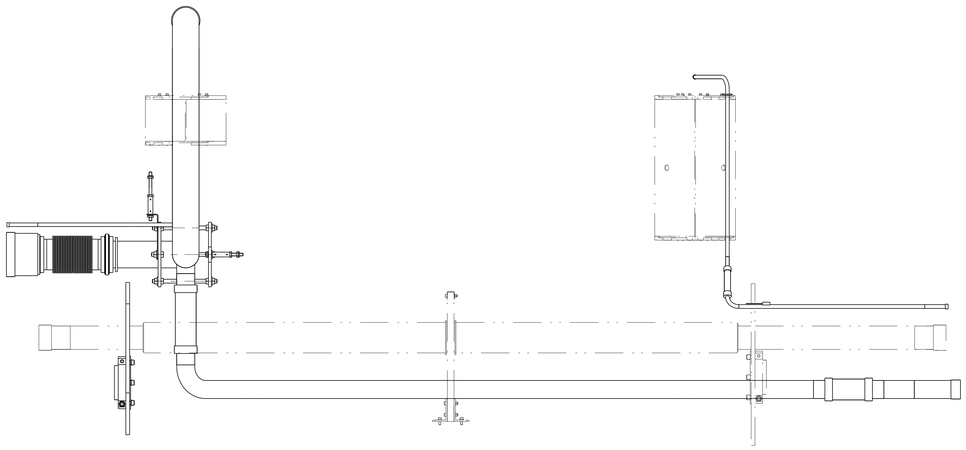

THIRD ANGLE PROJECTION

ERNEST ORLANDO LAWRENCE
BERKELEY NATIONAL LABORATORY
UNIVERSITY OF CALIFORNIA - BERKELEY

LHC IR FEEDBOX
CRYOGENICS
PIPING DFBXD&H IP2,8 RH 24C362

MICROFILMED:	DWG. TYPE	SHOWN ON	SCALE: 1:3/100	DO NOT SCALE PRINTS
	ASSEM	24C3626	SHEET 8 OF 10	
PATENT CLEAR:	DESIGN ACCT. NO.	CATEGORY CODE	DWG. NO.	SIZE / REV.
	Z5LCE2	LH2003	2512356	A

DWG. NO. 2512356 SIZE/REV. A SH. 8

BEAM TUBE

SHOWN FOR REFERENCE ONLY

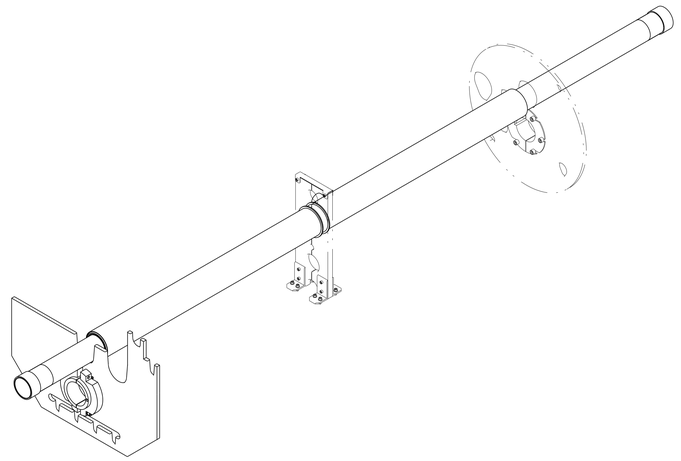

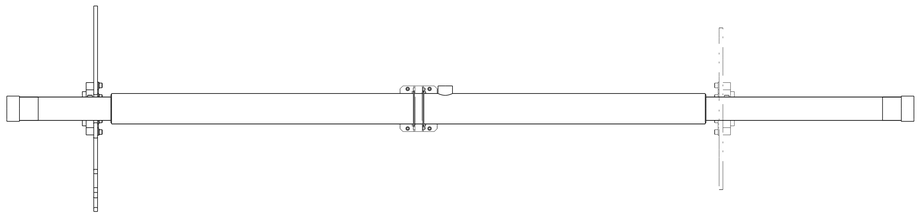

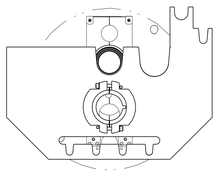

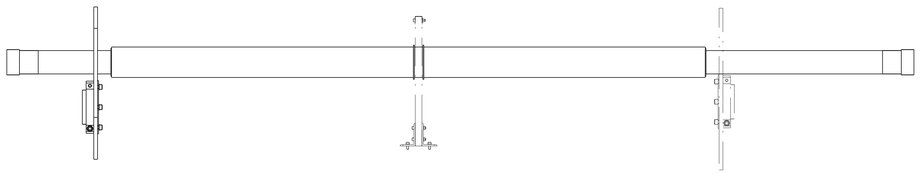

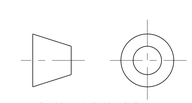

THIRD ANGLE PROJECTION

ERNEST ORLANDO LAWRENCE
BERKELEY NATIONAL LABORATORY
UNIVERSITY OF CALIFORNIA - BERKELEY

LHC IR FEEDBOX
CRYOGENICS
PIPING DFBXD&H IP2,8 RH 24C362

MICROFILMED:	DWG. TYPE	SHOWN ON	SCALE: 13/100	DO NOT SCALE PRINTS
	ASSEM	24C3626	SHEET 9 OF 10	
PATENT CLEAR:	DESIGN ACCT. NO.	CATEGORY CODE	DWG. NO.	SIZE / REV.
	Z5LCE2	LH2003	2512356	A

DWG. NO. 2512356 SIZE A REV. 9

BUS DUCT ASSEMBLY

SHOWN FOR REFERENCE ONLY

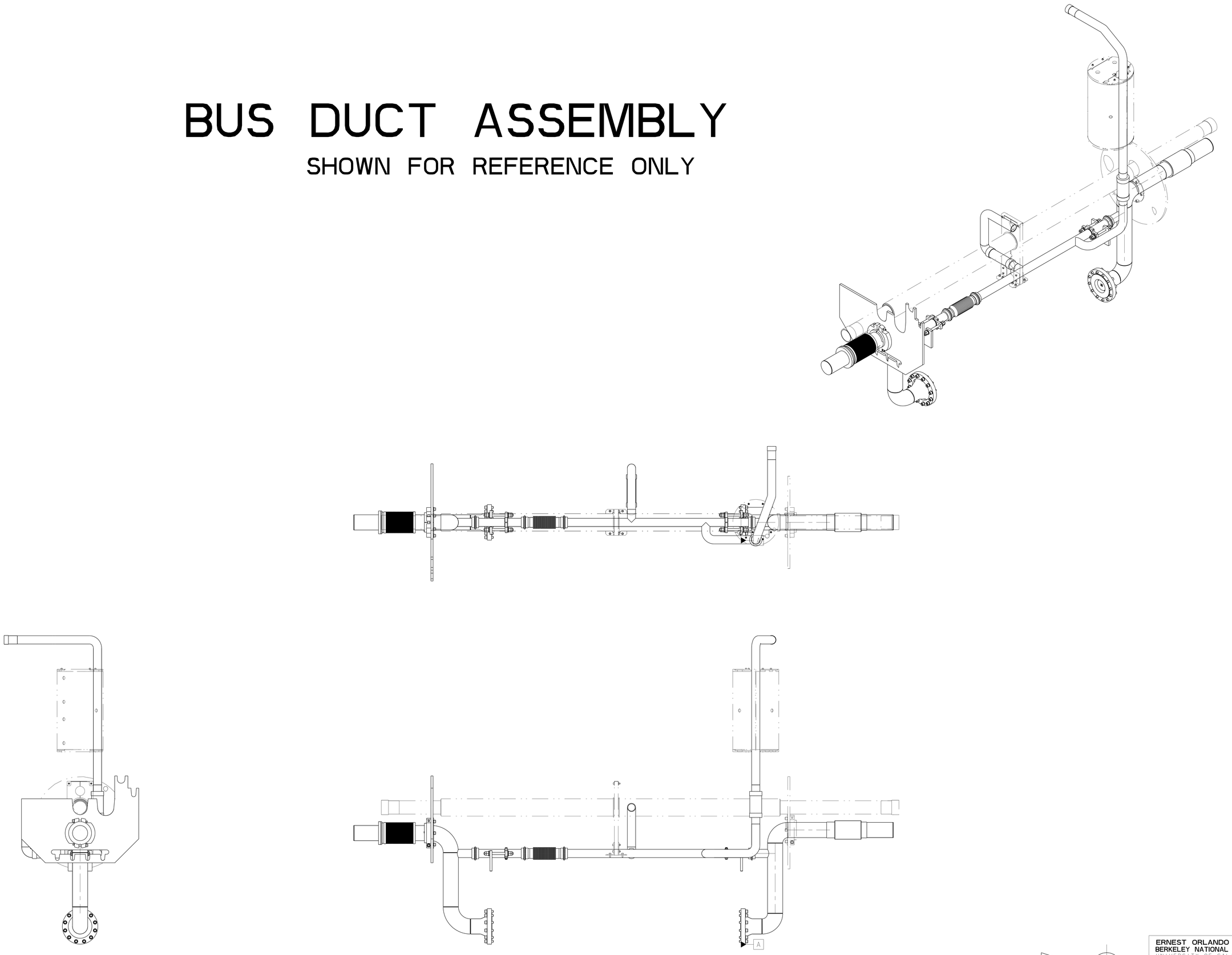

THIRD ANGLE PROJECTION

ERNEST ORLANDO LAWRENCE
BERKELEY NATIONAL LABORATORY
UNIVERSITY OF CALIFORNIA - BERKELEY

LHC IR FEEDBOX
CRYOGENICS
PIPING DFBXD&H IP2,8 RH 24C362

MICROFILMED:	DWG. TYPE	SHOWN ON	SCALE: 13/100	DO NOT SCALE PRINTS
	ASSEM	24C3626	SHEET 10 OF 10	
PATENT CLEAR:	DESIGN ACCT. NO.	CATEGORY CODE	DWG. NO.	SIZE / REV.
	Z5LCE2	LH2003	2512356	A

DWG. NO. 2512356 SIZE A REV. 10