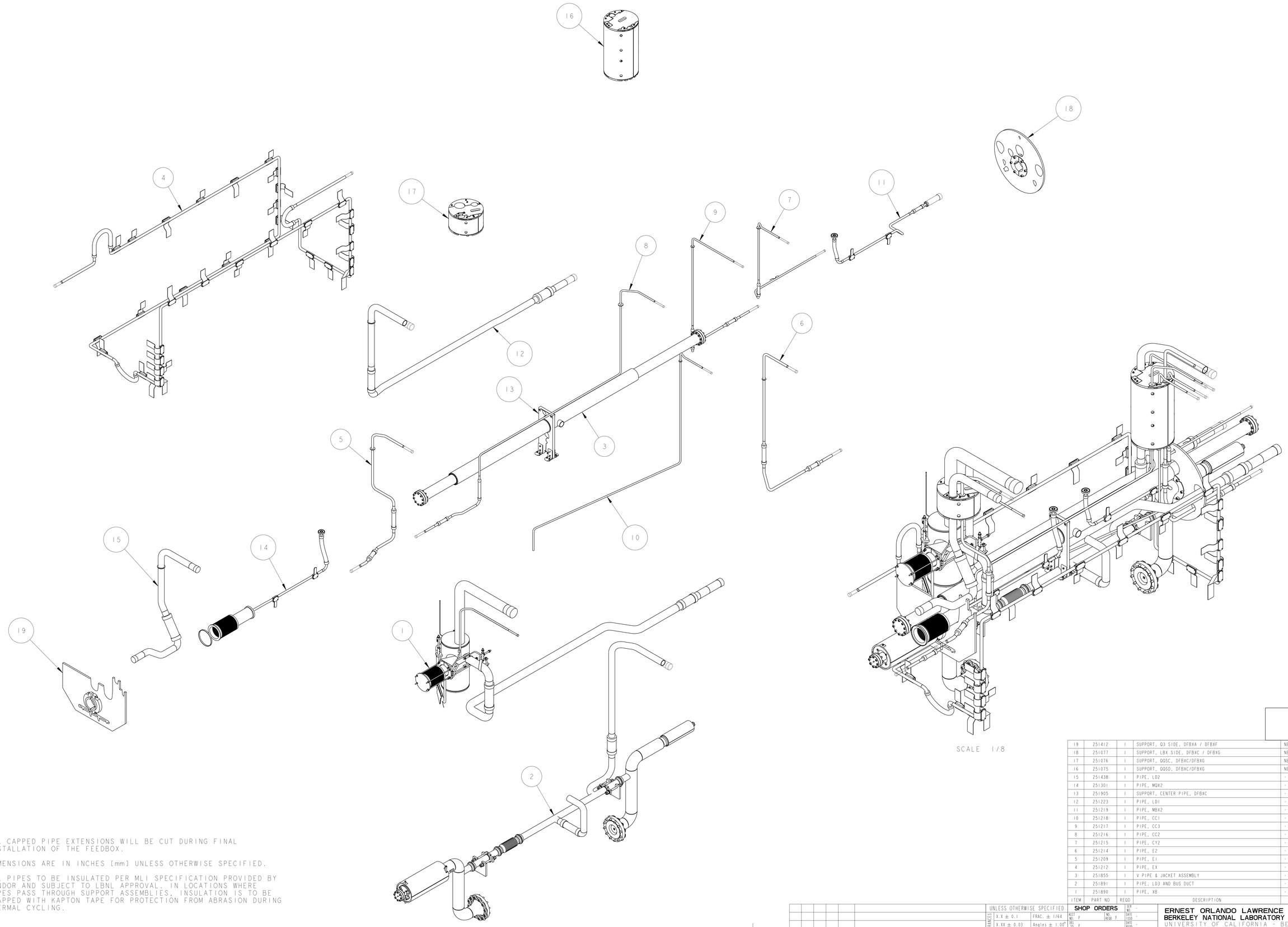

SCALE 1/8

NOTES:

1. ALL CAPPED PIPE EXTENSIONS WILL BE CUT DURING FINAL INSTALLATION OF THE FEEDBOX.
2. DIMENSIONS ARE IN INCHES [mm] UNLESS OTHERWISE SPECIFIED.
3. ALL PIPES TO BE INSULATED PER MLI SPECIFICATION PROVIDED BY VENDOR AND SUBJECT TO LBNL APPROVAL. IN LOCATIONS WHERE PIPES PASS THROUGH SUPPORT ASSEMBLIES, INSULATION IS TO BE WRAPPED WITH KAPTON TAPE FOR PROTECTION FROM ABRASION DURING THERMAL CYCLING.

THIRD ANGLE PROJECTION

ITEM	PART NO	REQD	DESCRIPTION	MATERIAL
19	251412	1	SUPPORT, Q3 SIDE, DFBXA / DFBXF	NEMA G10
18	251077	1	SUPPORT, LBX SIDE, DFBXC / DFBXG	NEMA G10
17	251076	1	SUPPORT, QQSC, DFBXC/DFBXG	NEMA G10
16	251075	1	SUPPORT, QQSD, DFBXC/DFBXG	NEMA G10
15	251438	1	PIPE, LD2	-
14	251301	1	PIPE, MQX2	-
13	251905	1	SUPPORT, CENTER PIPE, DFBXC	-
12	251223	1	PIPE, LD1	-
11	251219	1	PIPE, MBX2	-
10	251218	1	PIPE, CC1	-
9	251217	1	PIPE, CC3	-
8	251216	1	PIPE, CC2	-
7	251215	1	PIPE, CY2	-
6	251214	1	PIPE, E2	-
5	251209	1	PIPE, E1	-
4	251212	1	PIPE, EX	-
3	251855	1	V PIPE & JACKET ASSEMBLY	-
2	251891	1	PIPE, LD3 AND BUS DUCT	-
1	251890	1	PIPE, XB	-

REV	DWG	CHK	ZONE	DATE	CHANGES
B	ARH	DPO		02/05/03	UPDATED SUBASSEMBLY VIEWS
A	JDR	DPO			INITIAL CHANGES

UNLESS OTHERWISE SPECIFIED

TOLERANCES		
X.X ± 0.1	FRAC. ± 1/64	
X.XX ± 0.03	Angles ± 1.00°	
X.XXX ± 0.010	FINISH 125/	

DO NOT SCALE PRINT

THREADS ARE CLASS 2
CHAMFER ENDS OF ALL SCREW THREADS 30°
CUT ROUND, 1.5 THREAD RELIEF ON MACHINED THREADS
BREAK EDGES .016 MAX. ON MACHINED WORK
REMOVE BURRS, WELD SPLATTER & LOOSE SCALE
IN ACCORDANCE WITH ASME Y14.5M & B46.1

SHOP ORDERS

ACCT NO. y	NO. REQD y	DATE ISSD	-
DEL TO y		DATE REQD	-
SURFACE TREATMT	-		
IDENT METHOD	TAG		
PROJECT NUMBER	N/A		
PROJECT NAME	N/A		
DWG BY	M KNOLLS	DATE	13-Jul-02
CHK BY	Jon Zbasnik	DATE	20-JUL-02
APR BY	Jon Zbasnik	DATE	20-JUL-02

ERNEST ORLANDO LAWRENCE BERKELEY NATIONAL LABORATORY
UNIVERSITY OF CALIFORNIA - BERKELEY

LHC IR FEEDBOX
CRYOGENICS
PIPING ASSEMBLY DFBXG, DFBXC

MICROFILMED:	DWG. TYPE	SHOWN ON	SCALE: ~3/32	DO NOT SCALE PRINTS
	ASSEM	-	SHEET 1 OF 10	
PATENT CLEAR:	DESIGN ACCT. NO.	CATEGORY CODE	DWG. NO.	SIZE / REV.
	Z5LCE2	LH2003	2512266	B

DWG. NO. 2512266 SIZE B REV. SH. 1

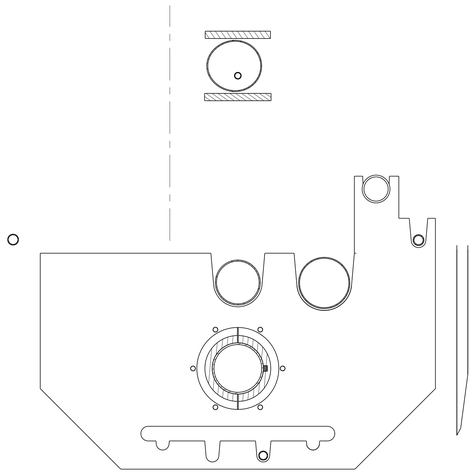

SECTION A - A
Q3 PIPE SUPPORT
SCALE 1/4
SEE NOTE 3

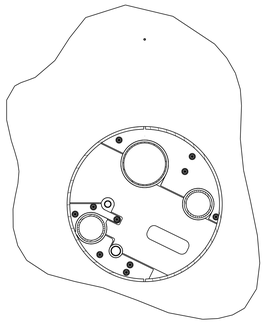

SECTION C - C
JUMPER 1 PIPE SUPPORT
SCALE 1/4
SEE NOTE 3

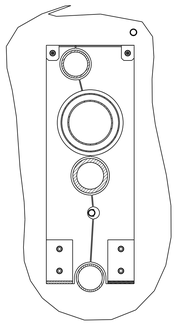

SECTION E - E
CENTER PIPE SUPPORT
SCALE 1/4
SEE NOTE 3

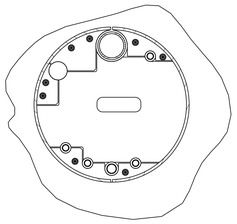

SECTION D - D
JUMPER 2 PIPE SUPPORT
SCALE 1/4
SEE NOTE 3

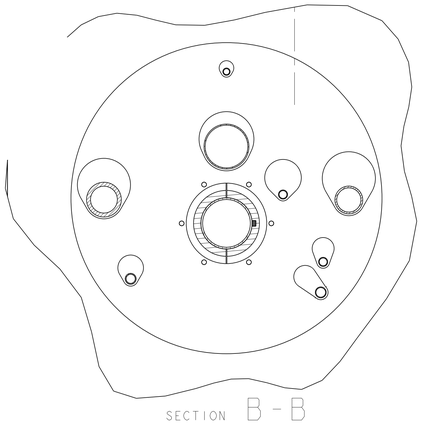

SECTION B - B
D1 PIPE SUPPORT
SCALE 1/4
SEE NOTE 3

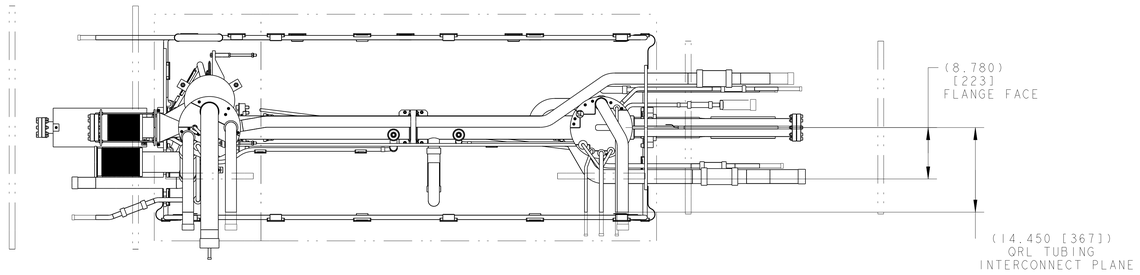

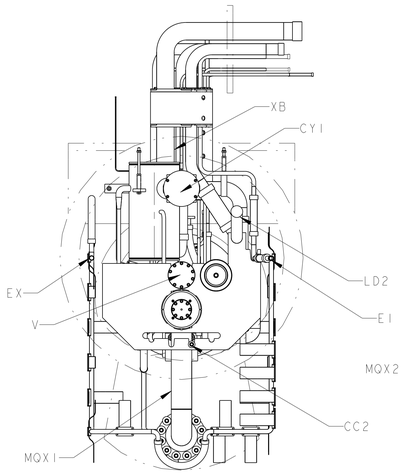

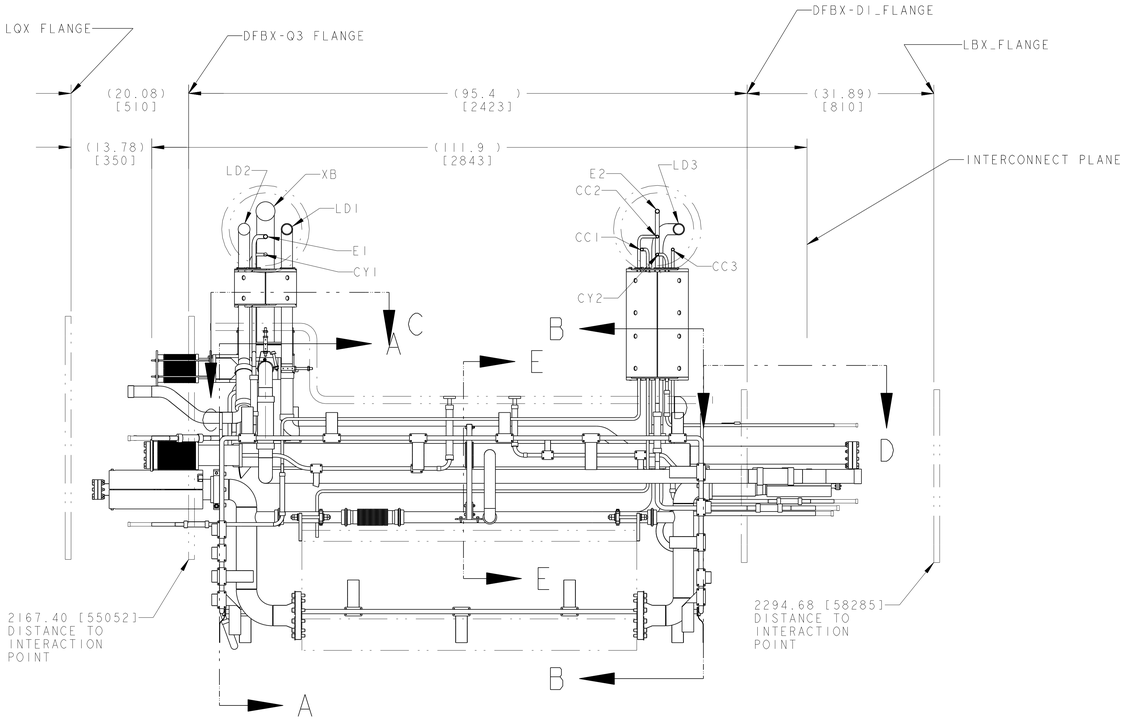

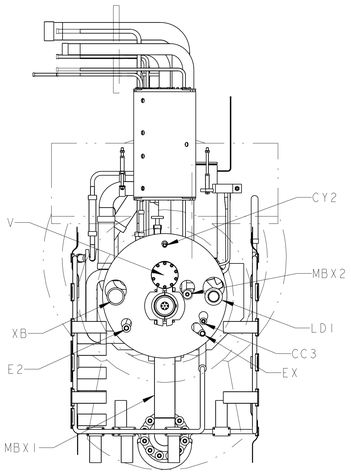

ERNEST ORLANDO LAWRENCE
BERKELEY NATIONAL LABORATORY
UNIVERSITY OF CALIFORNIA - BERKELEY

LHC IR FEEDBOX
CRYOGENICS
PIPING ASSEMBLY DFBXG, DFBXC

MICROFILMED:	DWG. TYPE	SHOWN ON	SCALE: ~3/32	DO NOT SCALE PRINTS
	ASSEM	-	SHEET 2 OF 10	
PATENT CLEAR:	DESIGN ACCT. NO.	CATEGORY CODE	DWG. NO.	SIZE / REV.
	Z5LCE2	LH2003	2512266	B

FILE: "F:\C_DRIVE\BMALLETT_DEFTK"

DWG. NO. 2512266 SHEET 2 REV. B

INSTRUMENTATION LINES

SHOWN FOR REFERENCE ONLY
NOTE: ALL WELDS MUST LEAVE TUBE INTERIOR BURR FREE

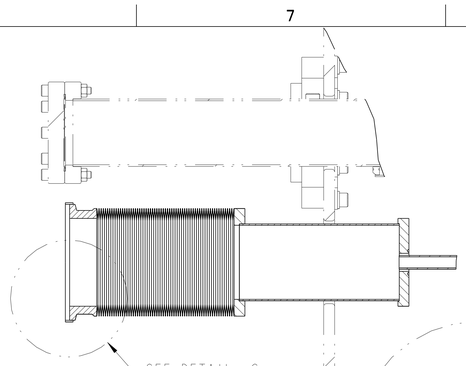

DETAIL F
SCALE 3/8

PIPE SHIPPED WITH EXTENDED CAPPED TUBE WELDED TO BELLOWS FLANGE. TUBE WILL BE CUT AS SHOWN IN DETAIL G AND USED AS A WELD SLEEVE DURING FINAL INSTALLATION OF THE FEEDBOX.

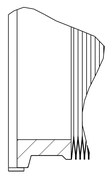

DETAIL G
SCALE 3/4

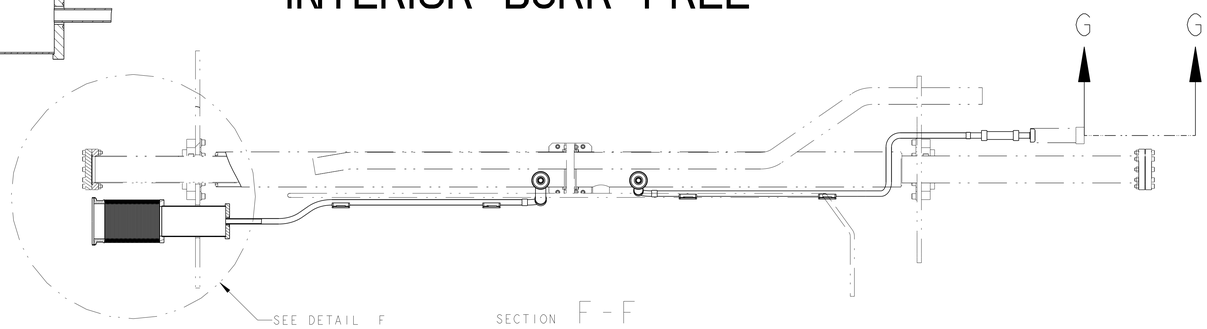

SECTION F-F

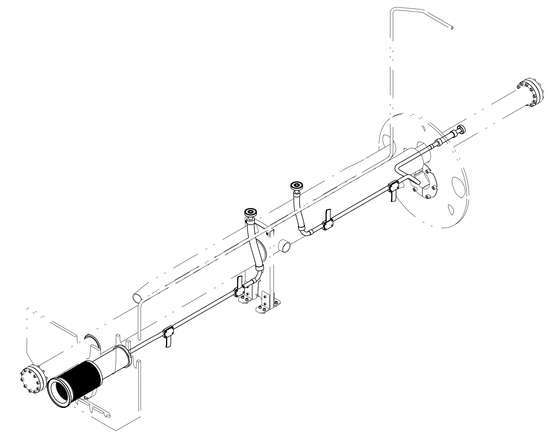

SCALE ~3/32

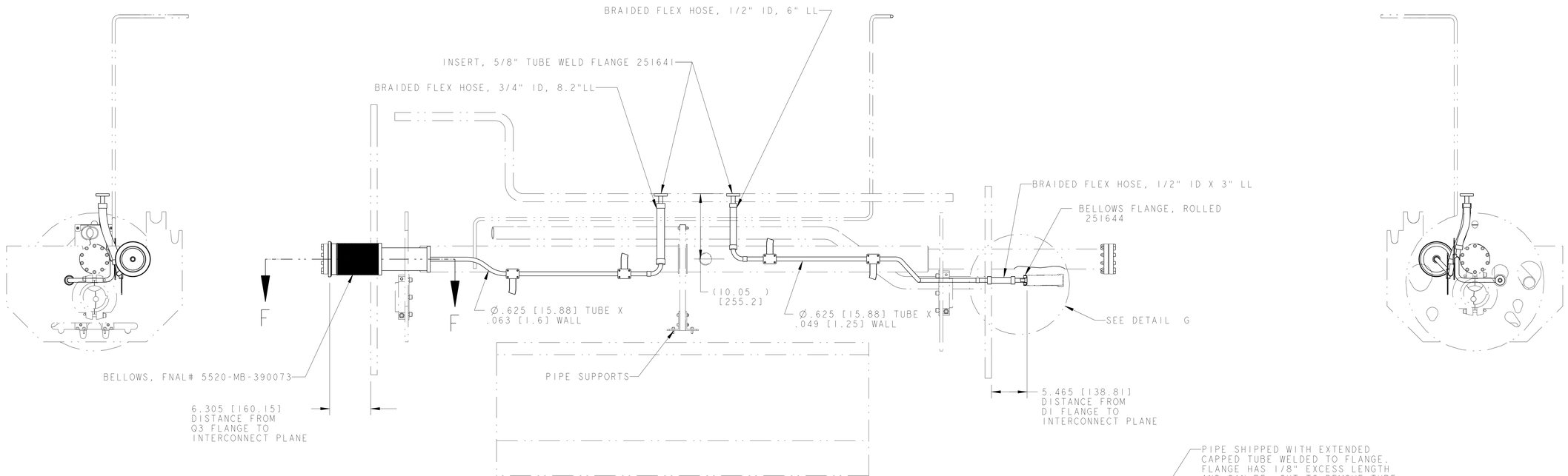

SECTION G-G
SCALE ~5/32

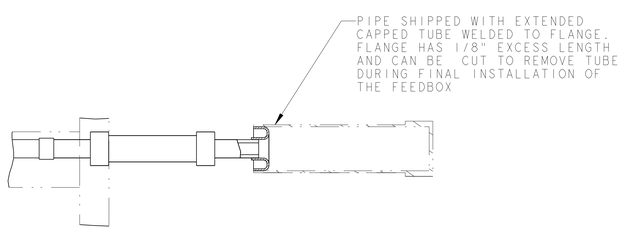

DETAIL G
SCALE 1/2

ERNEST ORLANDO LAWRENCE BERKELEY NATIONAL LABORATORY
UNIVERSITY OF CALIFORNIA - BERKELEY

LHC IR FEEDBOX
CRYOGENICS
PIPING ASSEMBLY DFBXG, DFBXC

MICROFILMED:	DWG. TYPE	SHOWN ON	SCALE: ~3/32	DO NOT SCALE PRINTS
	ASSEM	-	SHEET 3 OF 10	
PATENT CLEAR:	DESIGN ACCT. NO.	CATEGORY CODE	DWG. NO.	SIZE / REV.
	Z5LCE2	LH2003	2512266	B

DWG. NO. 2512266 SHEET REV. 3 B

LD LINES

SHOWN FOR REFERENCE ONLY

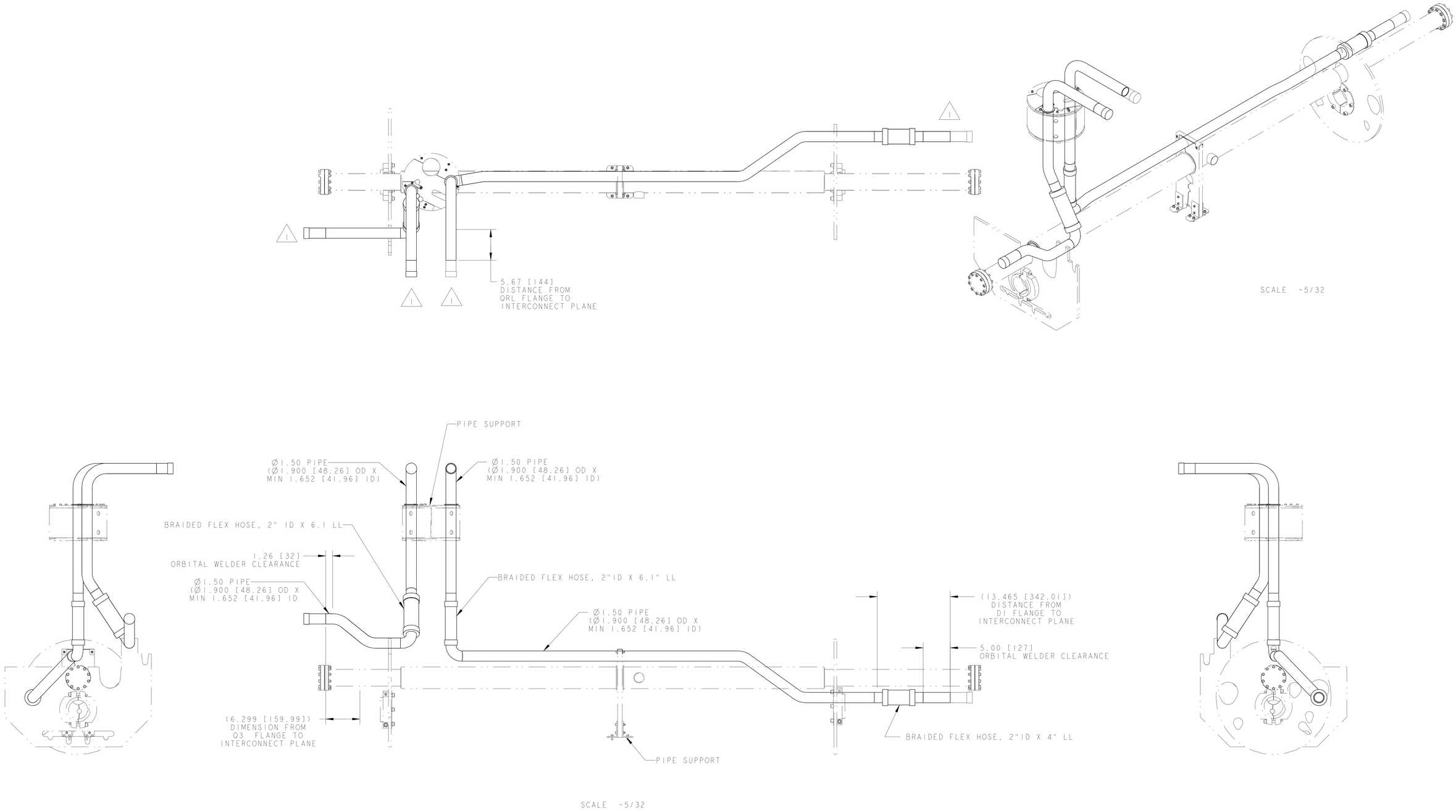

ERNEST ORLANDO LAWRENCE
BERKELEY NATIONAL LABORATORY
UNIVERSITY OF CALIFORNIA - BERKELEY

LHC IR FEEDBOX
CRYOGENICS
PIPING ASSEMBLY DFBXG, DFBXC

MICROFILMED:	DWG. TYPE	SHOWN ON	SCALE: ~3/32	DO NOT SCALE PRINTS
	ASSEM	-	SHEET 4 OF 10	
PATENT CLEAR:	DESIGN ACCT. NO.	CATEGORY CODE	DWG. NO.	SIZE / REV.
	Z5LCE2	LH2003	2512266	B

DWG. NO. 2512266 SIZE B REV. 4

CC LINES

SHOWN FOR REFERENCE ONLY

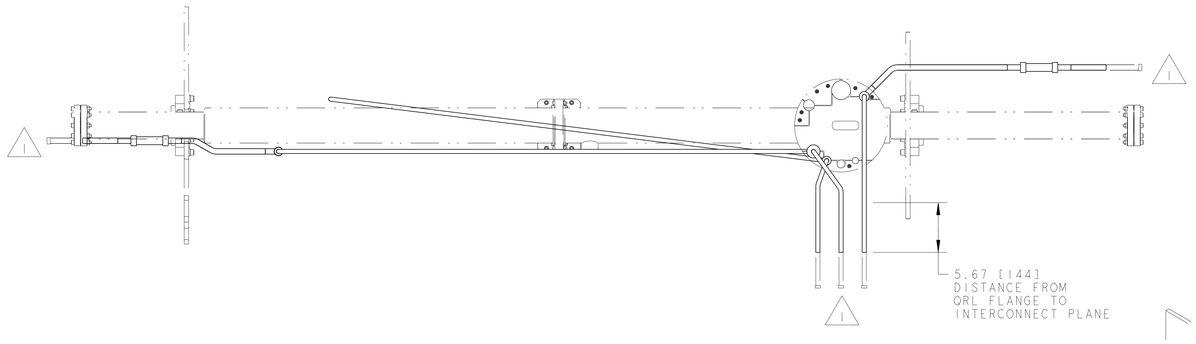

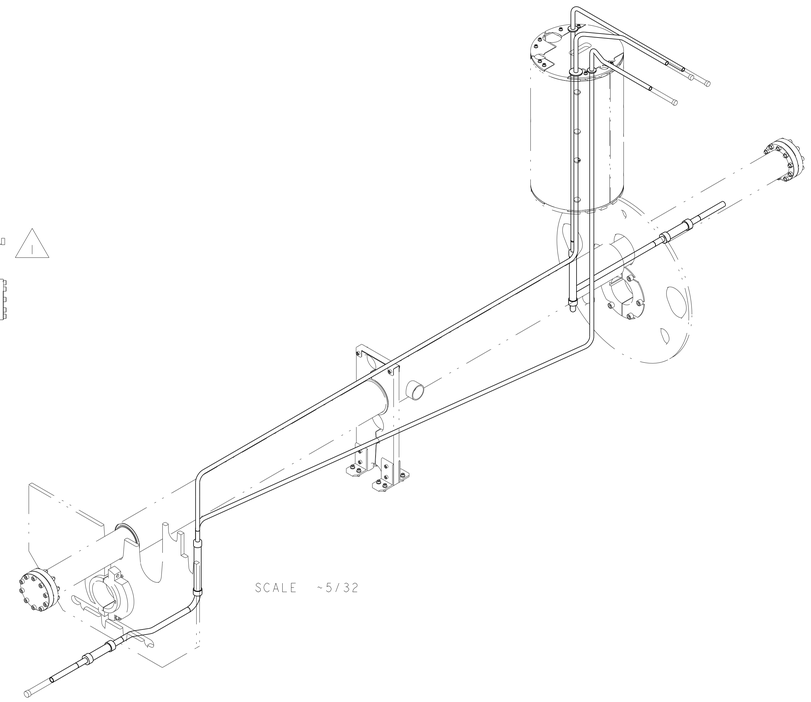

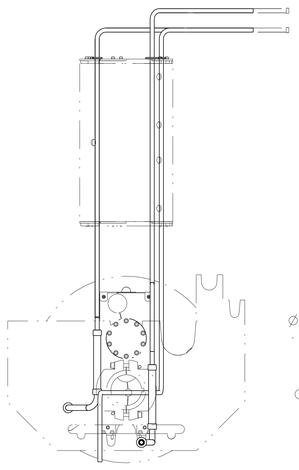

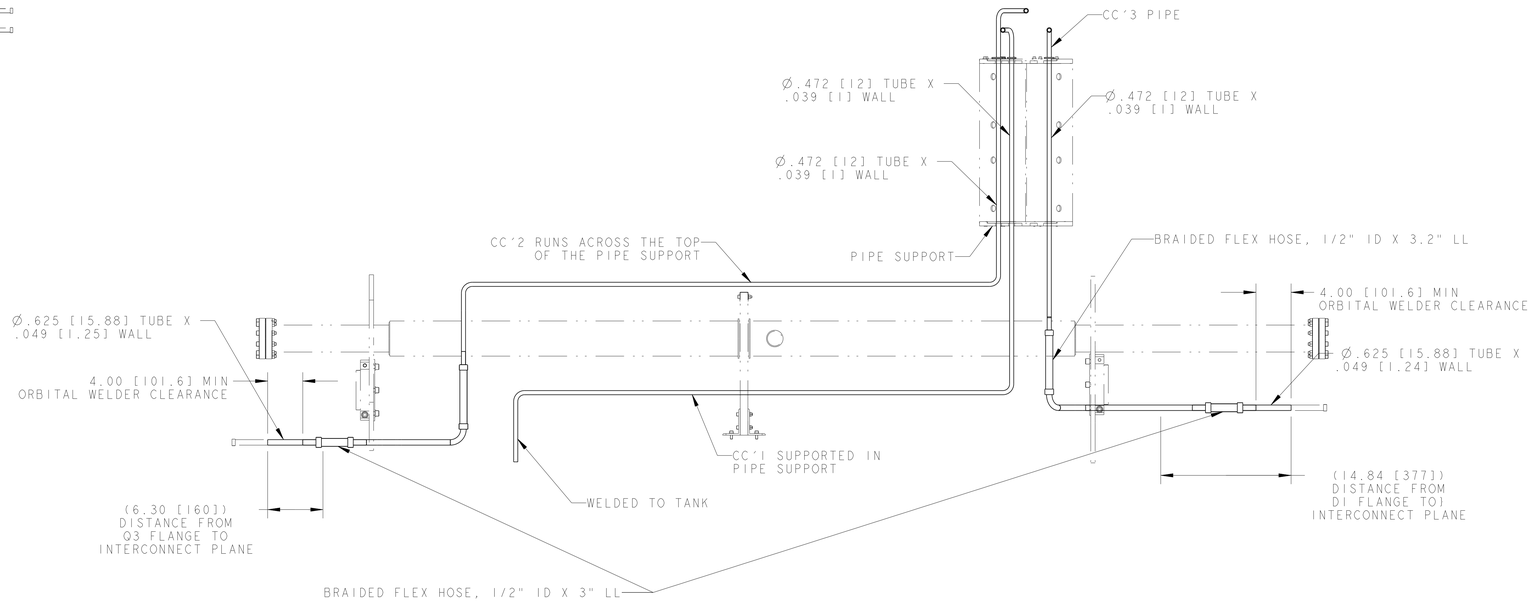

SCALE ~5/32

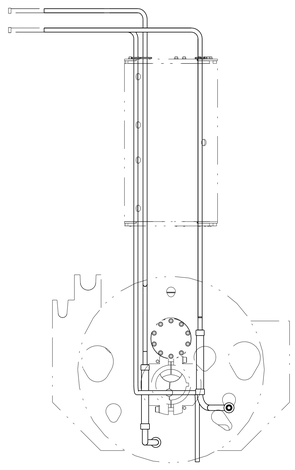

DWG. NO. 2512266 B 5

ERNEST ORLANDO LAWRENCE
BERKELEY NATIONAL LABORATORY
UNIVERSITY OF CALIFORNIA - BERKELEY

LHC IR FEEDBOX
CRYOGENICS
PIPING ASSEMBLY DFBXG, DFBXC

MICROFILMED:	DWG. TYPE	SHOWN ON	SCALE: ~3/32	DO NOT SCALE PRINTS
	ASSEM	-	SHEET 5 OF 10	
PATENT CLEAR:	DESIGN ACCT. NO.	CATEGORY CODE	DWG. NO.	SIZE / REV.
	Z5LCE2	LH2003	2512266	B

E1 & E2 LINES

SHOWN FOR REFERENCE ONLY

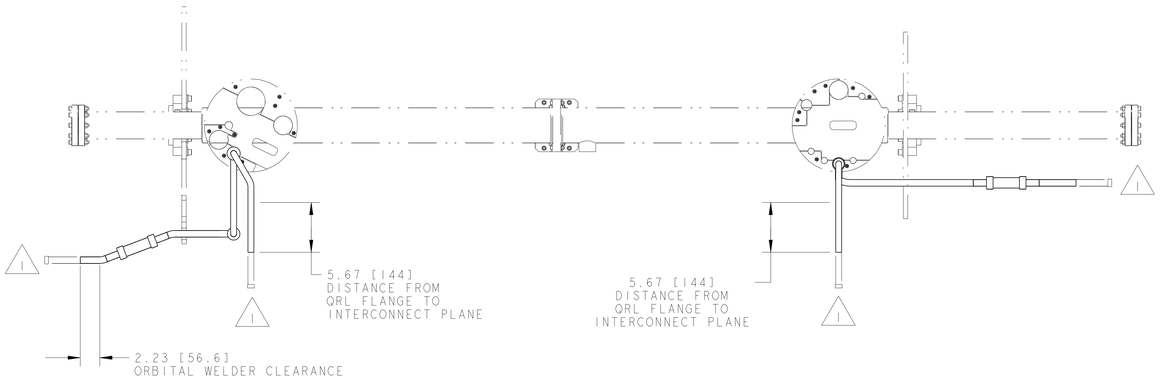

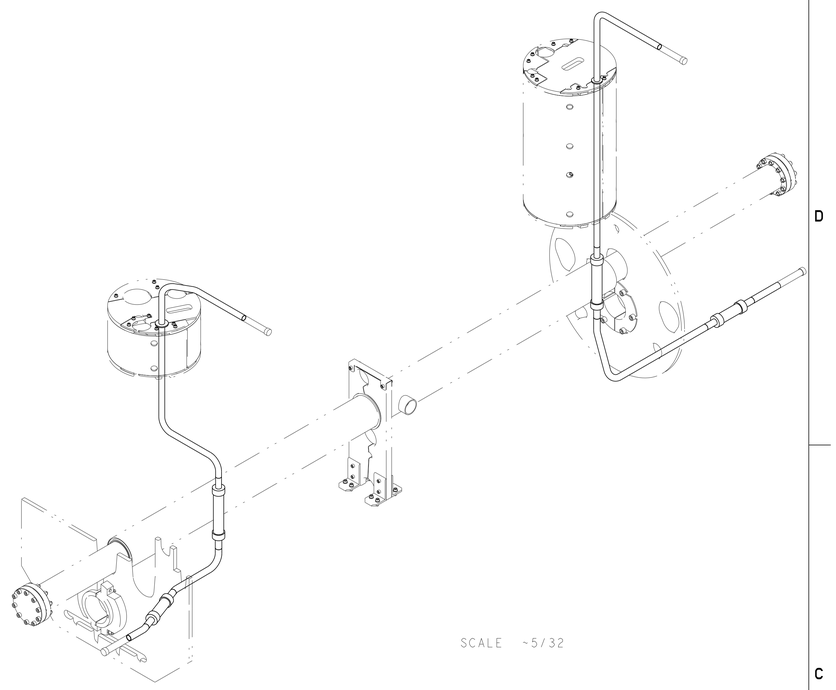

SCALE ~5/32

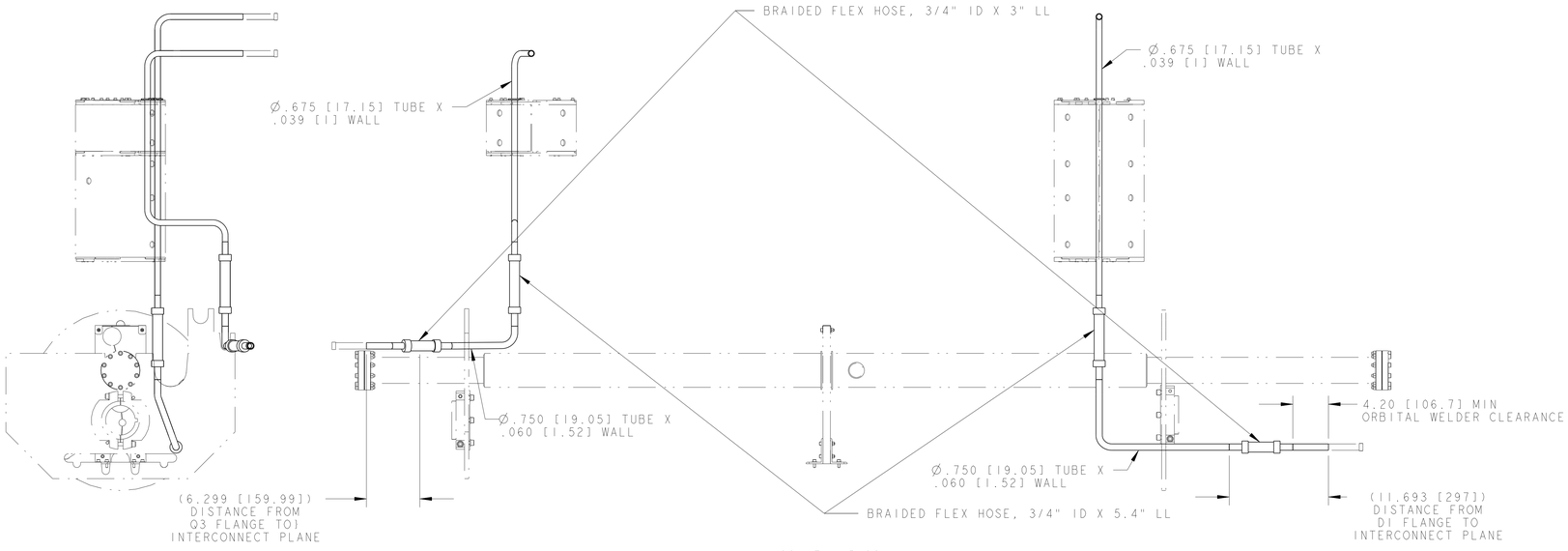

SCALE ~5/32

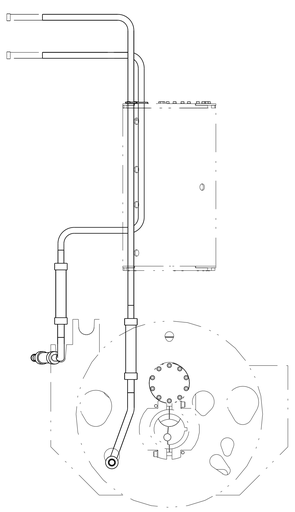

ERNEST ORLANDO LAWRENCE
BERKELEY NATIONAL LABORATORY
UNIVERSITY OF CALIFORNIA - BERKELEY

LHC IR FEEDBOX
CRYOGENICS
PIPING ASSEMBLY DFBXG, DFBXC

MICROFILMED:	DWG. TYPE	SHOWN ON	SCALE: ~3/32	DO NOT SCALE PRINTS
	ASSEM	-	SHEET 6 OF 10	
PATENT CLEAR:	DESIGN ACCT. NO.	CATEGORY CODE	DWG. NO.	SIZE / REV.
	Z5LCE2	LH2003	2512266	B

FILE: 2512266_BWALLEN_20170

DWG. NO. 2512266 SIZE/REV. B SHT. 6

EX LINE

SHOWN FOR REFERENCE ONLY

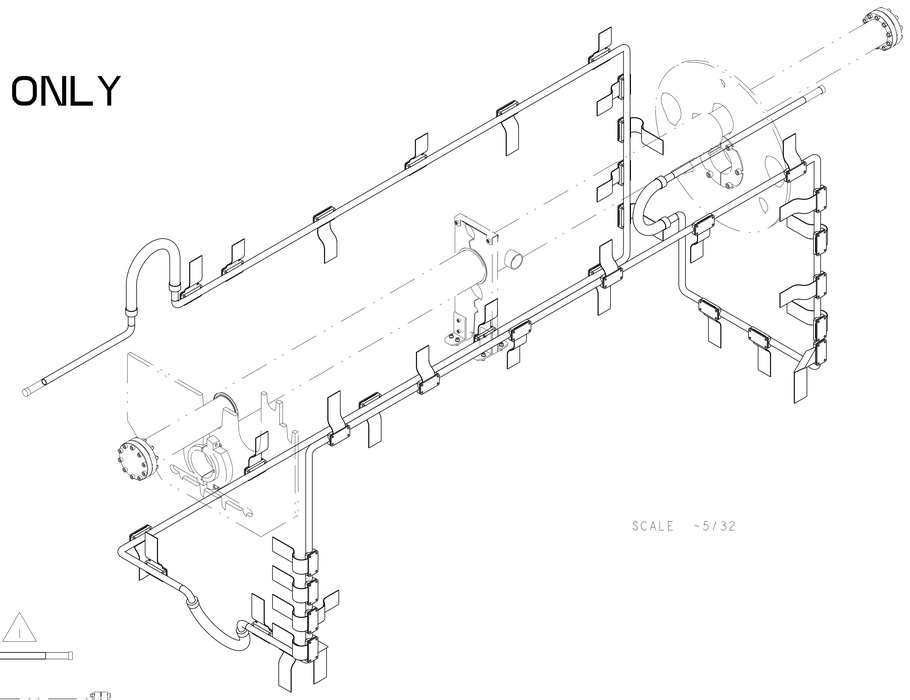

SCALE ~5/32

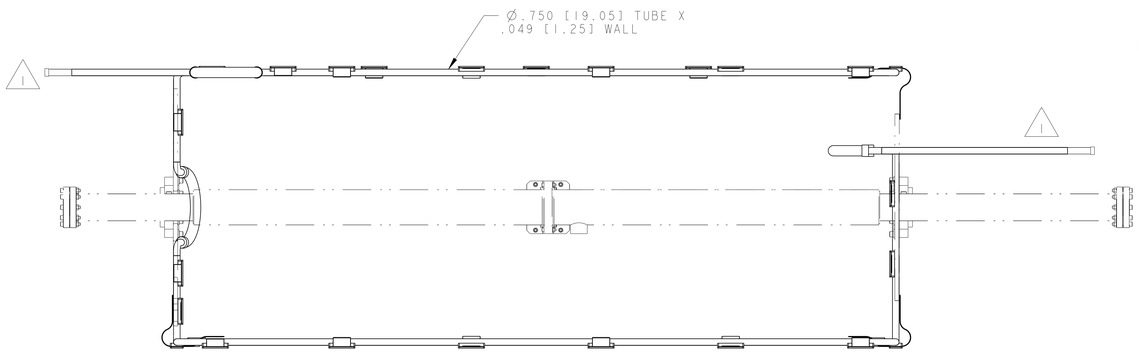

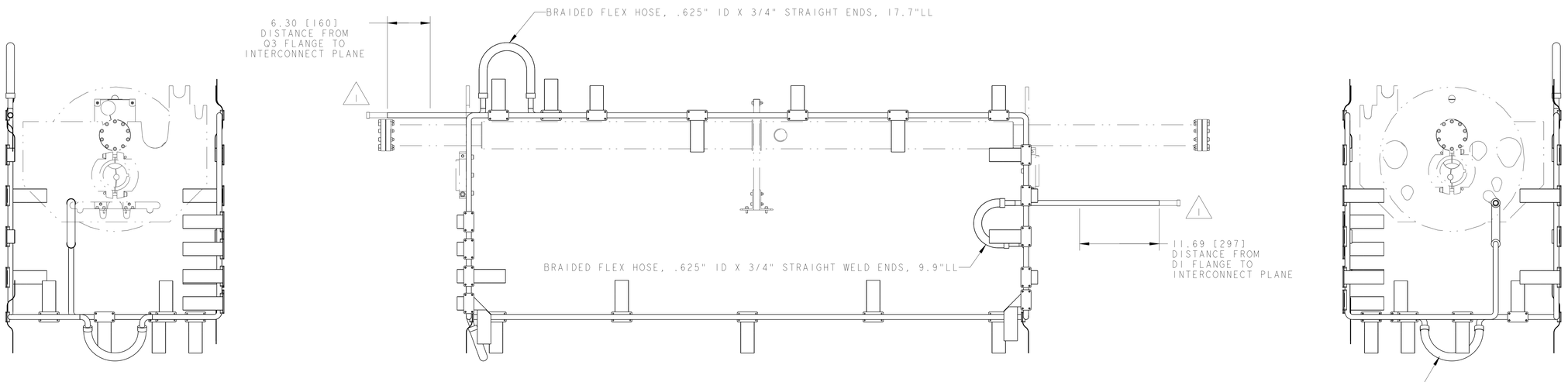

SCALE ~5/32

ERNEST ORLANDO LAWRENCE
BERKELEY NATIONAL LABORATORY
UNIVERSITY OF CALIFORNIA - BERKELEY

LHC IR FEEDBOX
CRYOGENICS
PIPING ASSEMBLY DFBXG, DFBXC

MICROFILMED:	DWG. TYPE	SHOWN ON	SCALE: ~3/32	DO NOT SCALE PRINTS
	ASSEM	-	SHEET 7 OF 10	
PATENT CLEAR:	DESIGN ACCT. NO.	CATEGORY CODE	DWG. NO.	SIZE / REV.
	Z5LCE2	LH2003	2512266	B

DWG. NO. 2512266 B 7

XB & CY LINES

SHOWN FOR REFERENCE ONLY

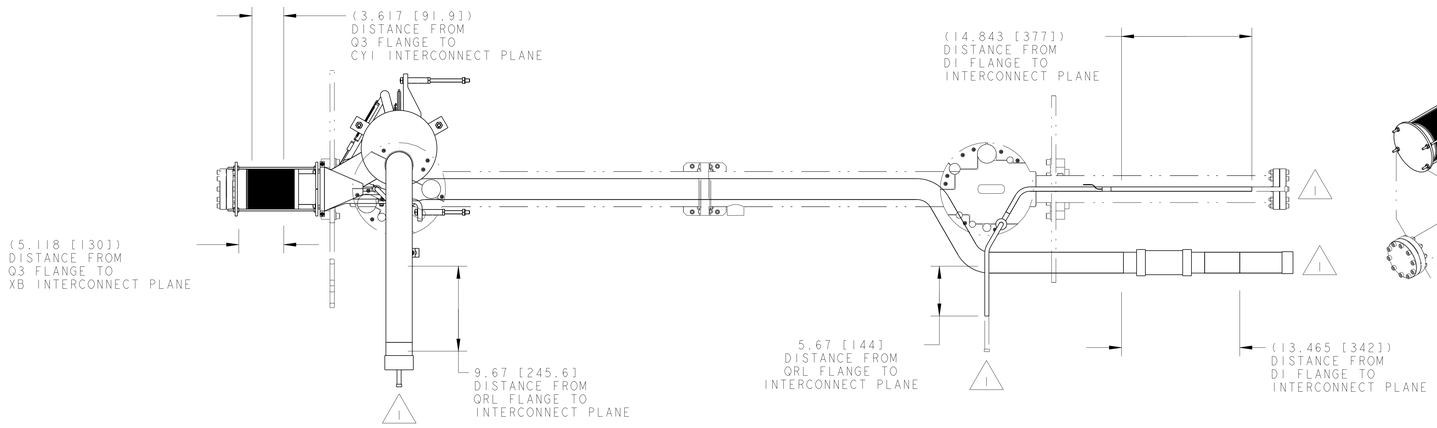

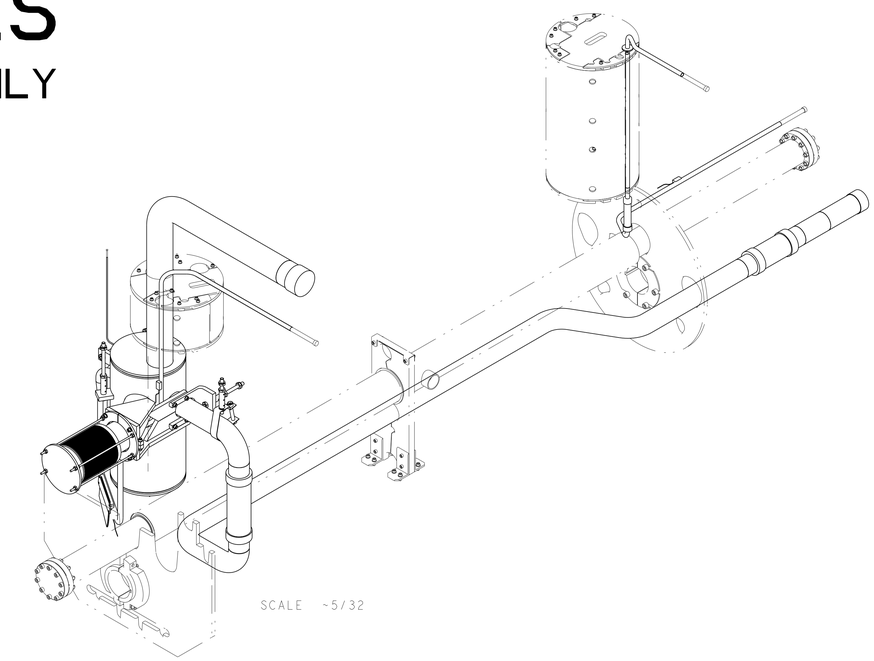

SCALE ~5/32

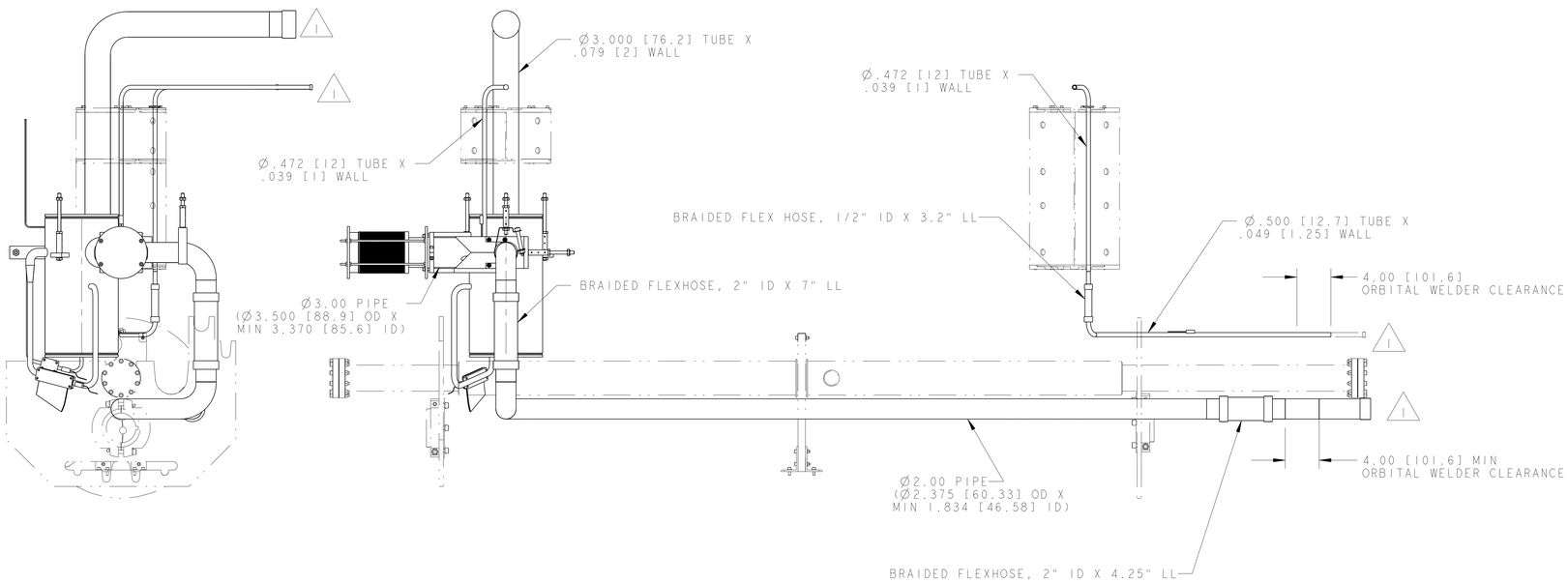

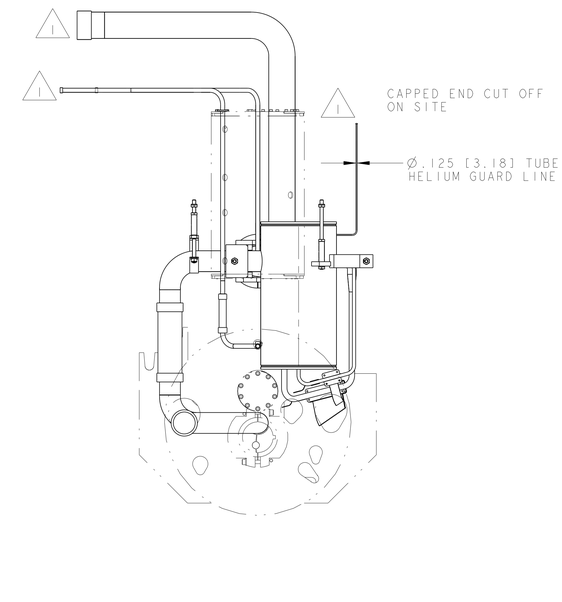

SCALE ~5/32

ERNEST ORLANDO LAWRENCE
BERKELEY NATIONAL LABORATORY
UNIVERSITY OF CALIFORNIA - BERKELEY

LHC IR FEEDBOX
CRYOGENICS
PIPING ASSEMBLY DFBXG, DFBXC

MICROFILMED:	DWG. TYPE	SHOWN ON	SCALE: ~3/32	DO NOT SCALE PRINTS
	ASSEM	-	SHEET 8 OF 10	
PATENT CLEAR:	DESIGN ACCT. NO.	CATEGORY CODE	DWG. NO.	SIZE / REV.
	Z5LCE2	LH2003	2512266	B

DWG. NO. 2512266 SIZE/REV. B LM 8

BEAM TUBE

SHOWN FOR REFERENCE ONLY

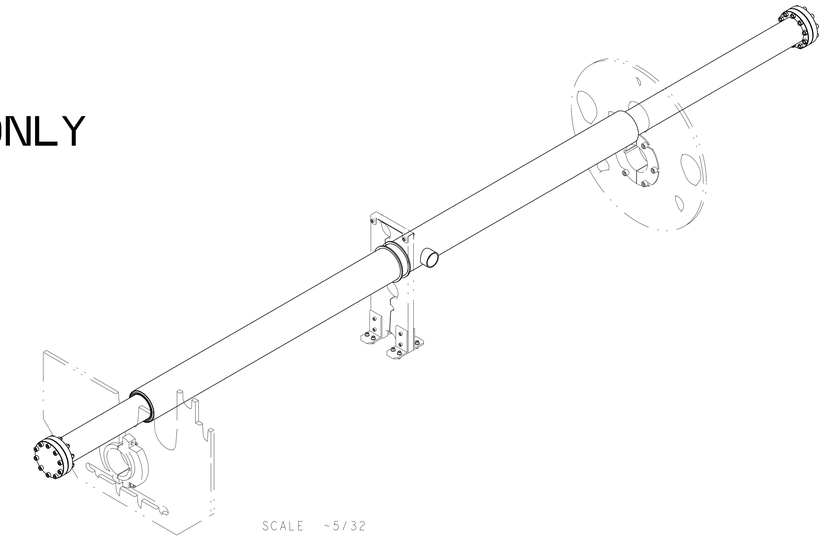

SCALE ~5/32

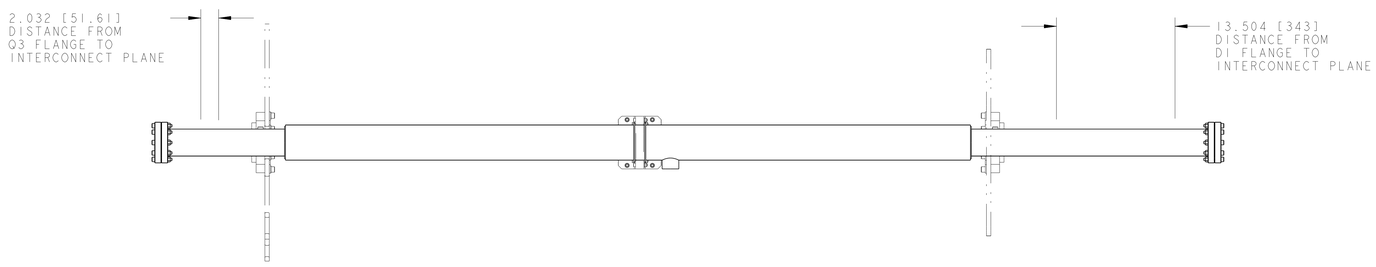

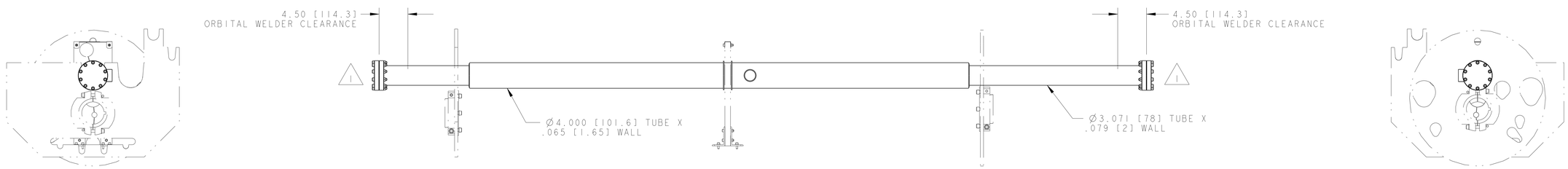

SCALE ~5/32

ERNEST ORLANDO LAWRENCE
BERKELEY NATIONAL LABORATORY
UNIVERSITY OF CALIFORNIA - BERKELEY

LHC IR FEEDBOX
CRYOGENICS
PIPING ASSEMBLY DFBXG, DFBXC

MICROFILMED:	DWG. TYPE	SHOWN ON	SCALE: ~3/32	DO NOT SCALE PRINTS
	ASSEM	-	SHEET 9 OF 10	
PATENT CLEAR:	DESIGN ACCT. NO.	CATEGORY CODE	DWG. NO.	SIZE / REV.
	Z5LCE2	LH2003	2512266	B

DWG. NO. 2512266 SIZE/REV. B SHT. 9

BUS DUCT ASSEMBLY

SHOWN FOR REFERENCE ONLY

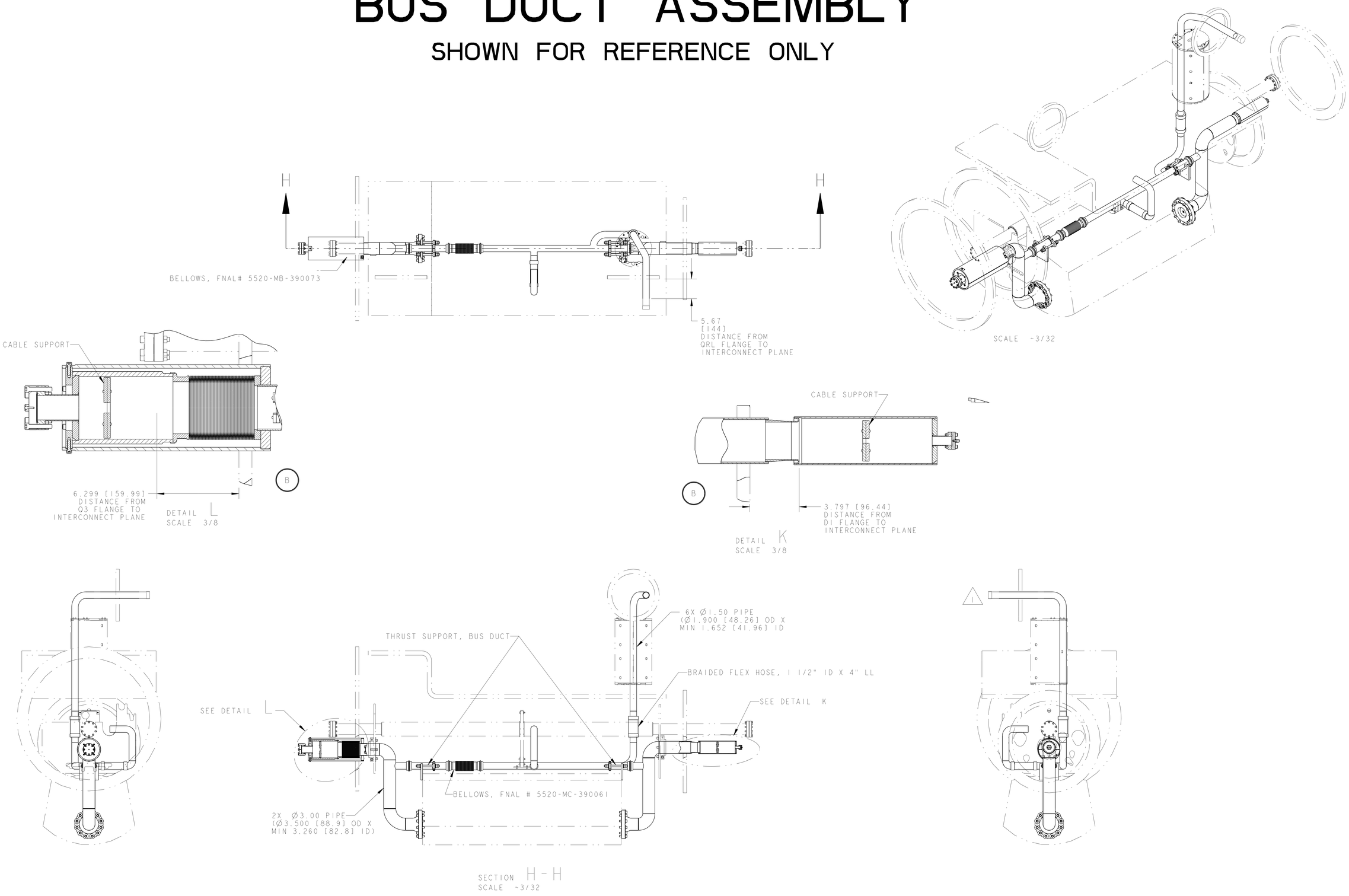

ERNEST ORLANDO LAWRENCE
BERKELEY NATIONAL LABORATORY
UNIVERSITY OF CALIFORNIA - BERKELEY

LHC IR FEEDBOX
CRYOGENICS
PIPING ASSEMBLY DFBXG, DFBXC

MICROFILMED:	DWG. TYPE	SHOWN ON	SCALE: ~3/32	DO NOT SCALE PRINTS
	ASSEM	-	SHEET 10 OF 10	
PATENT CLEAR:	DESIGN ACCT. NO.	CATEGORY CODE	DWG. NO.	SIZE / REV.
	Z5LCE2	LH2003	2512266	B

DWG. NO. 2512266 SIZE B REV. 10