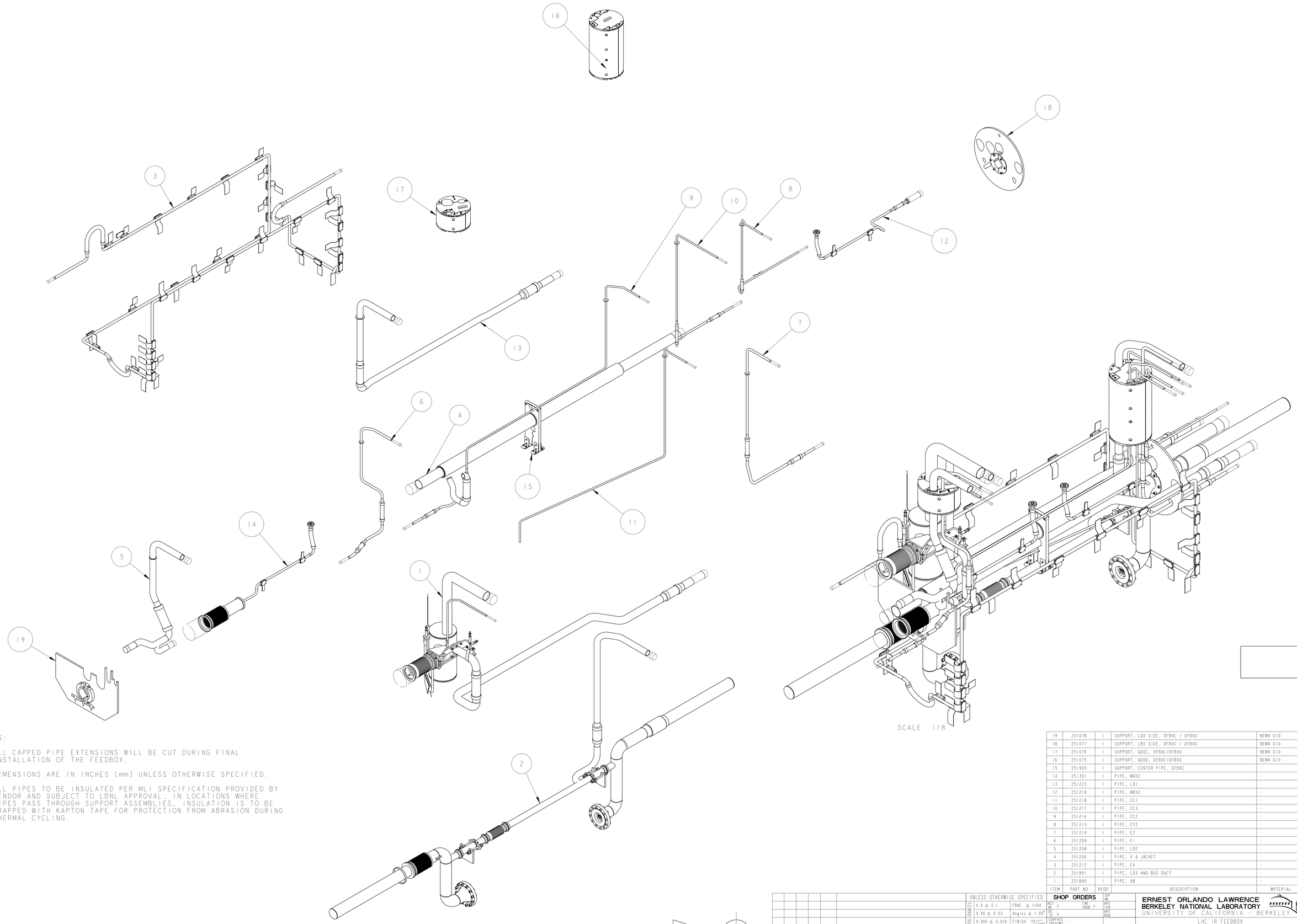

NOTES:

1. ALL CAPPED PIPE EXTENSIONS WILL BE CUT DURING FINAL INSTALLATION OF THE FEEDBOX.
2. DIMENSIONS ARE IN INCHES [mm] UNLESS OTHERWISE SPECIFIED.
3. ALL PIPES TO BE INSULATED PER MLI SPECIFICATION PROVIDED BY VENDOR AND SUBJECT TO LBNL APPROVAL. IN LOCATIONS WHERE PIPES PASS THROUGH SUPPORT ASSEMBLIES, INSULATION IS TO BE WRAPPED WITH KAPTON TAPE FOR PROTECTION FROM ABRASION DURING THERMAL CYCLING.

ITEM	PART NO	REQD	DESCRIPTION	MATERIAL
19	251078	1	SUPPORT, LQX SIDE, DFBXC / DFBXG	NEMA G10
18	251077	1	SUPPORT, LBX SIDE, DFBXC / DFBXG	NEMA G10
17	251076	1	SUPPORT, QQSC, DFBXC/DFBXG	NEMA G10
16	251075	1	SUPPORT, QQSD, DFBXC/DFBXG	NEMA G10
15	251905	1	SUPPORT, CENTER PIPE, DFBXC	-
14	251301	1	PIPE, MQX2	-
13	251223	1	PIPE, LD1	-
12	251219	1	PIPE, MBX2	-
11	251218	1	PIPE, CC1	-
10	251217	1	PIPE, CC3	-
9	251216	1	PIPE, CC2	-
8	251215	1	PIPE, CY2	-
7	251214	1	PIPE, E2	-
6	251209	1	PIPE, E1	-
5	251208	1	PIPE, LD2	-
4	251206	1	PIPE, V & JACKET	-
3	251212	1	PIPE, EX	-
2	251891	1	PIPE, LD3 AND BUS DUCT	-
1	251890	1	PIPE, XB	-

REV	DWG	CHK	ZONE	DATE	CHANGES
A	JDR	DPO			INITIAL CHANGES

UNLESS OTHERWISE SPECIFIED

TOLERANCES		
	X.X ± 0.1	FRAC. ± 1/64
	X.XX ± 0.03	Angles ± 1.00°
	X.XXX ± 0.010	FINISH 125/

DO NOT SCALE PRINT

THREADS ARE CLASS 2
CHAMFER ENDS OF ALL SCREW TREADS 30°
CUT ROUND, 1.5 THREAD RELIEF ON MACHINED THREADS
BREAK EDGES .016 MAX. ON MACHINED WORK
REMOVE BURRS, WELD SPLATTER & LOOSE SCALE
IN ACCORDANCE WITH ASME Y14.5M & B46.1

SHOP ORDERS

ACCT NO.	y	NO. REQD	y
DEL TO	y	DATE REQD	-
SURFACE TREATMT	-		
IDENT METHOD	TAG		
PROJECT NUMBER	N/A		
PROJECT NAME	N/A		
DWG BY	M KNOLLS	DATE	13-Jul-02
CHK BY	Jon Zbasnik	DATE	20-JUL-02
APR BY	Jon Zbasnik	DATE	20-JUL-02

ERNEST ORLANDO LAWRENCE BERKELEY NATIONAL LABORATORY
UNIVERSITY OF CALIFORNIA - BERKELEY

LHC IR FEEDBOX
CRYOGENICS
PIPING ASSEMBLY DFBXG, DFBXC

MICROFILMED:	DWG. TYPE	SHOWN ON	SCALE: ~3/32	DO NOT SCALE PRINTS
	ASSEM	-	SHEET 1 OF 10	
PATENT CLEAR:	DESIGN ACCT. NO.	CATEGORY CODE	DWG. NO.	SIZE / REV.
	Z5LCE2	LH2003	2512266	A

DWG. NO. 2512266 SIZE A REV. 1 SH. 1

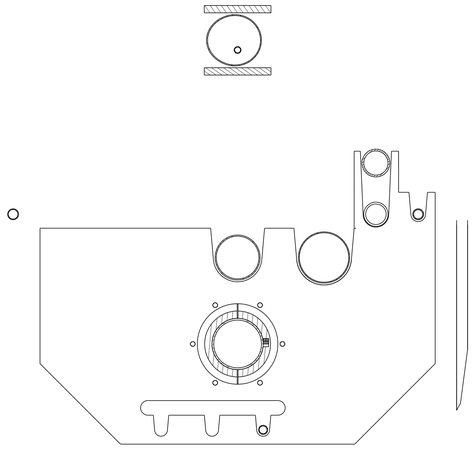

SECTION A - A
Q3 PIPE SUPPORT
SCALE 1/4
SEE NOTE 3

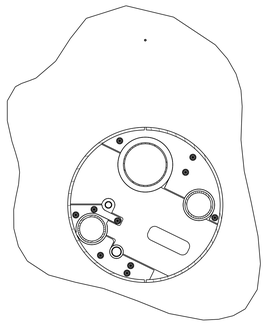

SECTION C - C
JUMPER 1 PIPE SUPPORT
SCALE 1/4
SEE NOTE 3

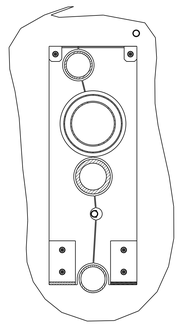

SECTION E - E
CENTER PIPE SUPPORT
SCALE 1/4
SEE NOTE 3

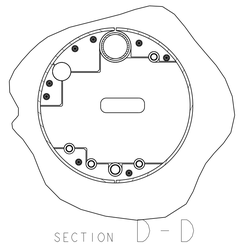

SECTION D - D
JUMPER 2 PIPE SUPPORT
SCALE 1/4
SEE NOTE 3

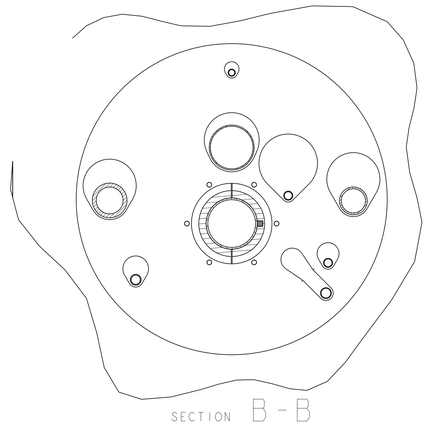

SECTION B - B
D1 PIPE SUPPORT
SCALE 1/4
SEE NOTE 3

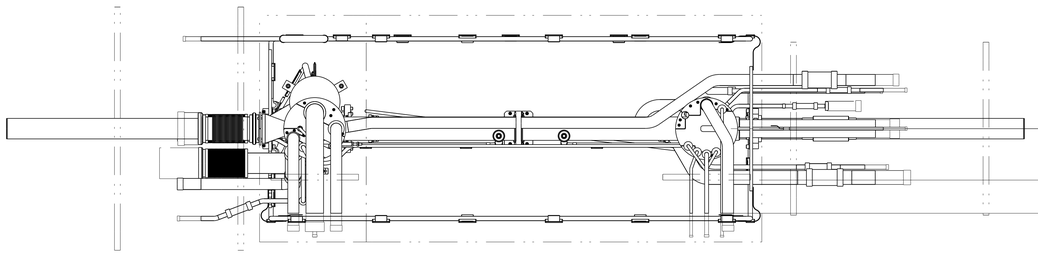

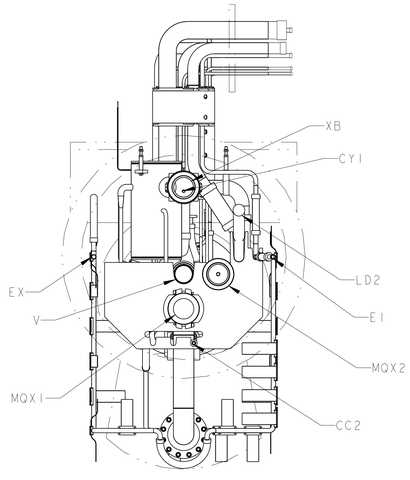

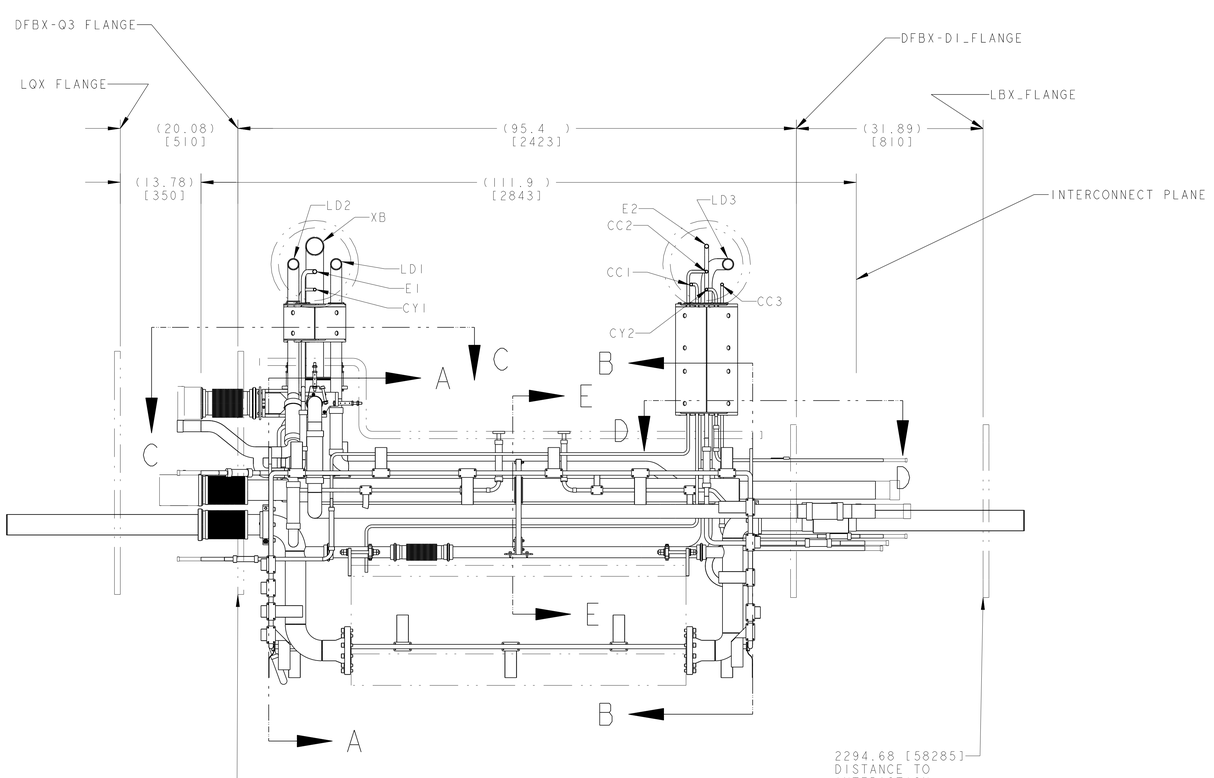

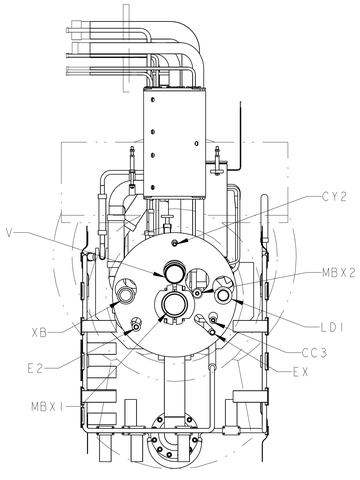

THIRD ANGLE PROJECTION

ERNEST ORLANDO LAWRENCE
BERKELEY NATIONAL LABORATORY
UNIVERSITY OF CALIFORNIA - BERKELEY

LHC IR FEEDBOX
CRYOGENICS
PIPING ASSEMBLY DFBXG, DFBXC

MICROFILMED:	DWG. TYPE	SHOWN ON	SCALE: ~3/32	DO NOT SCALE PRINTS
	ASSEM	-	SHEET 2 OF 10	
PATENT CLEAR:	DESIGN ACCT. NO.	CATEGORY CODE	DWG. NO.	SIZE / REV.
	Z5LCE2	LH2003	2512266	A

DWG. NO. 2512266 SIZE A REV 2

INSTRUMENTATION LINES

SHOWN FOR REFERENCE ONLY
NOTE: ALL WELDS MUST LEAVE TUBE INTERIOR BURR FREE

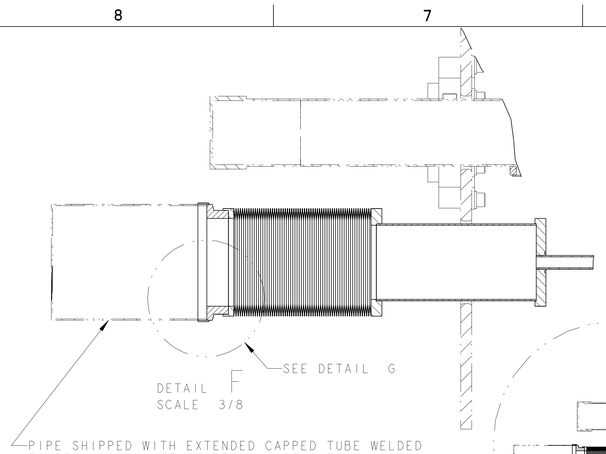

DETAIL F
SCALE 3/8

PIPE SHIPPED WITH EXTENDED CAPPED TUBE WELDED TO BELLOWS FLANGE. TUBE WILL BE CUT AS SHOWN IN DETAIL G AND USED AS A WELD SLEEVE DURING FINAL INSTALLATION OF THE FEEDBOX.

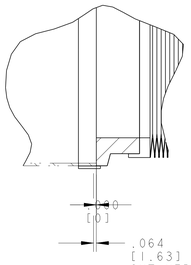

DETAIL G
SCALE 3/4

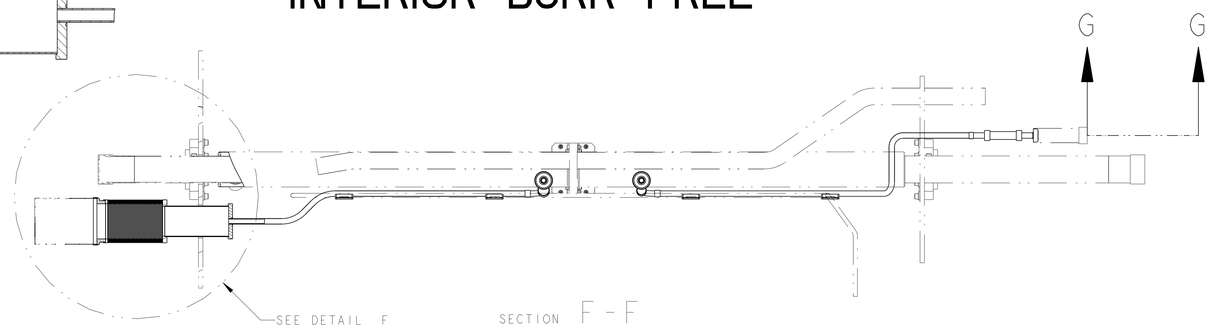

SECTION F-F

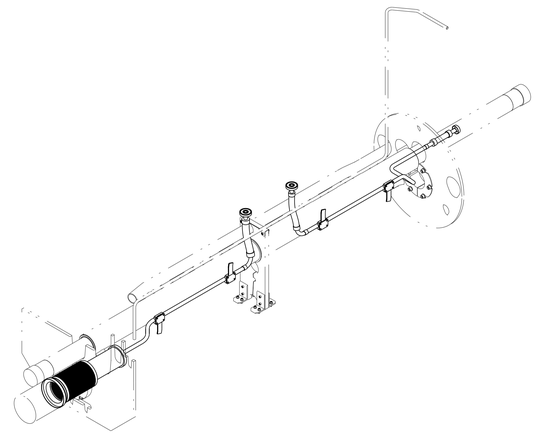

SCALE ~3/32

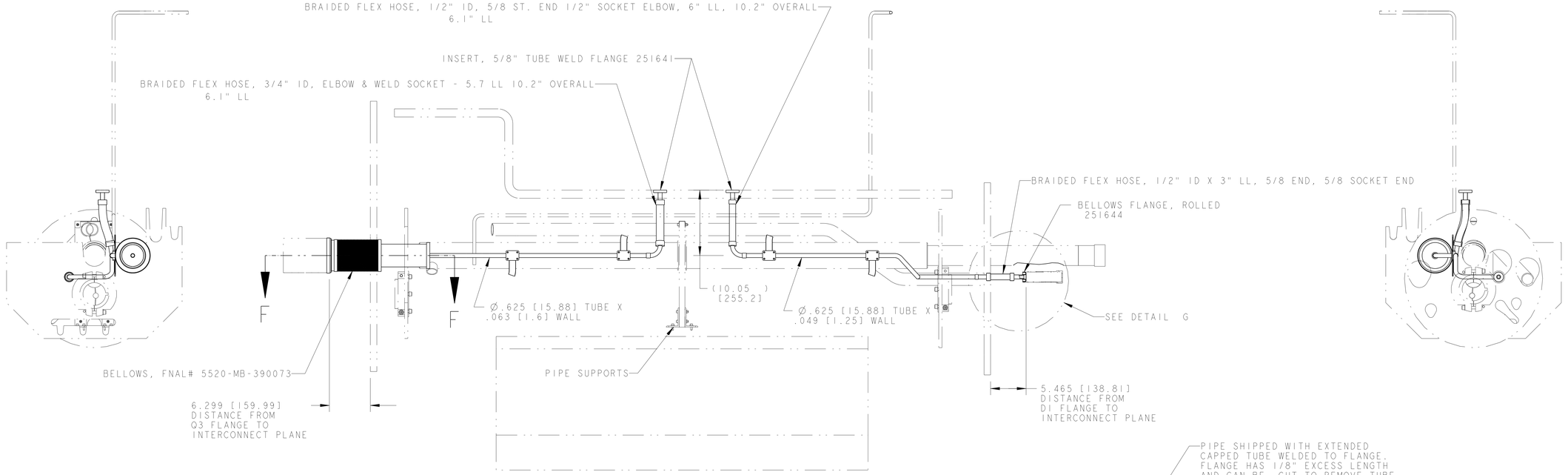

SECTION G-G
SCALE ~5/32

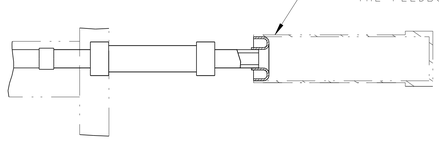

DETAIL G
SCALE 1/2

DWG. NO. 2512266 SHEET NO. A 3

ERNEST ORLANDO LAWRENCE
BERKELEY NATIONAL LABORATORY
UNIVERSITY OF CALIFORNIA - BERKELEY

LHC IR FEEDBOX
CRYOGENICS
PIPING ASSEMBLY DFBXG, DFBXC

MICROFILMED:	DWG. TYPE	SHOWN ON	SCALE: ~3/32	DO NOT SCALE PRINTS
	ASSEM	-	SHEET 3 OF 10	
PATENT CLEAR:	DESIGN ACCT. NO.	CATEGORY CODE	DWG. NO.	SIZE / REV.
	Z5LCE2	LH2003	2512266	A

LD LINES

SHOWN FOR REFERENCE ONLY

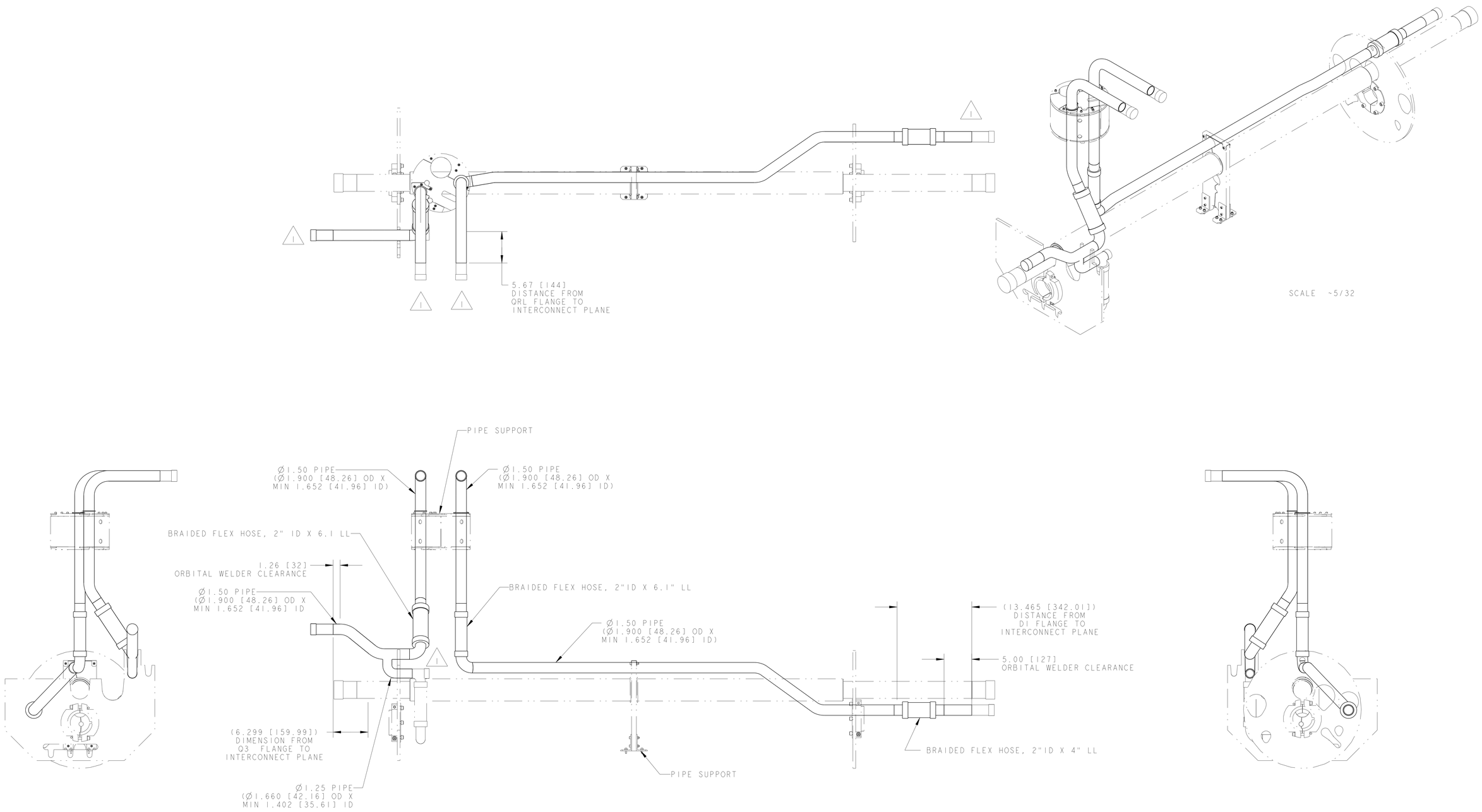

ERNEST ORLANDO LAWRENCE
BERKELEY NATIONAL LABORATORY
UNIVERSITY OF CALIFORNIA - BERKELEY

LHC IR FEEDBOX
CRYOGENICS
PIPING ASSEMBLY DFBXG, DFBXC

MICROFILMED:	DWG. TYPE	SHOWN ON	SCALE: ~3/32	DO NOT SCALE PRINTS
	ASSEM	-	SHEET 4 OF 10	
PATENT CLEAR:	DESIGN ACCT. NO.	CATEGORY CODE	DWG. NO.	SIZE / REV.
	Z5LCE2	LH2003	2512266	A

DWG. NO. 2512266 SIZE A REV. 4

CC LINES

SHOWN FOR REFERENCE ONLY

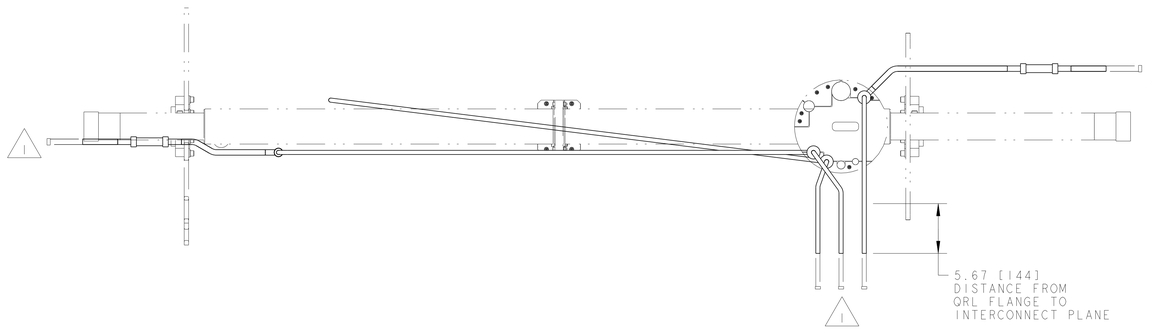

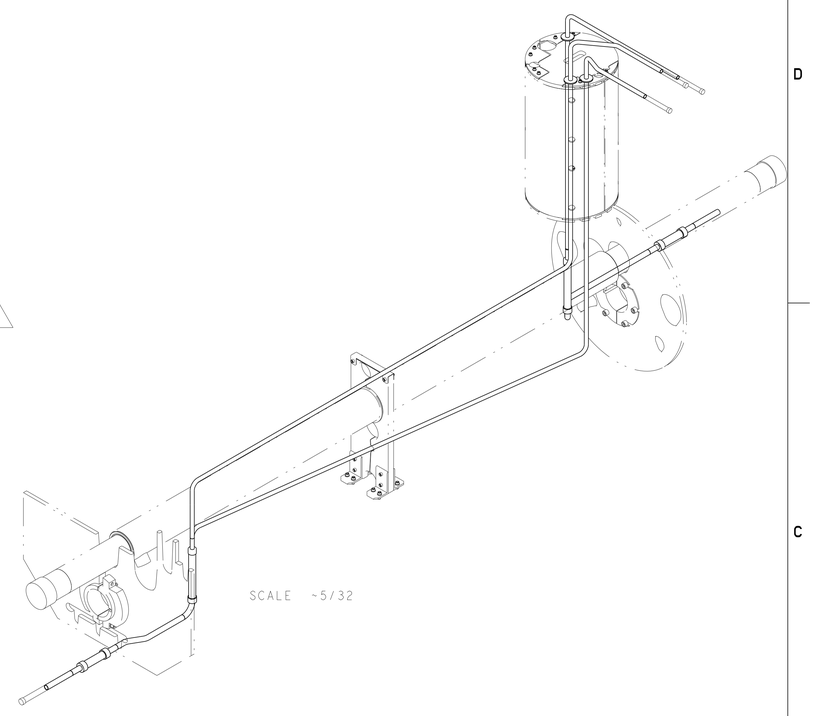

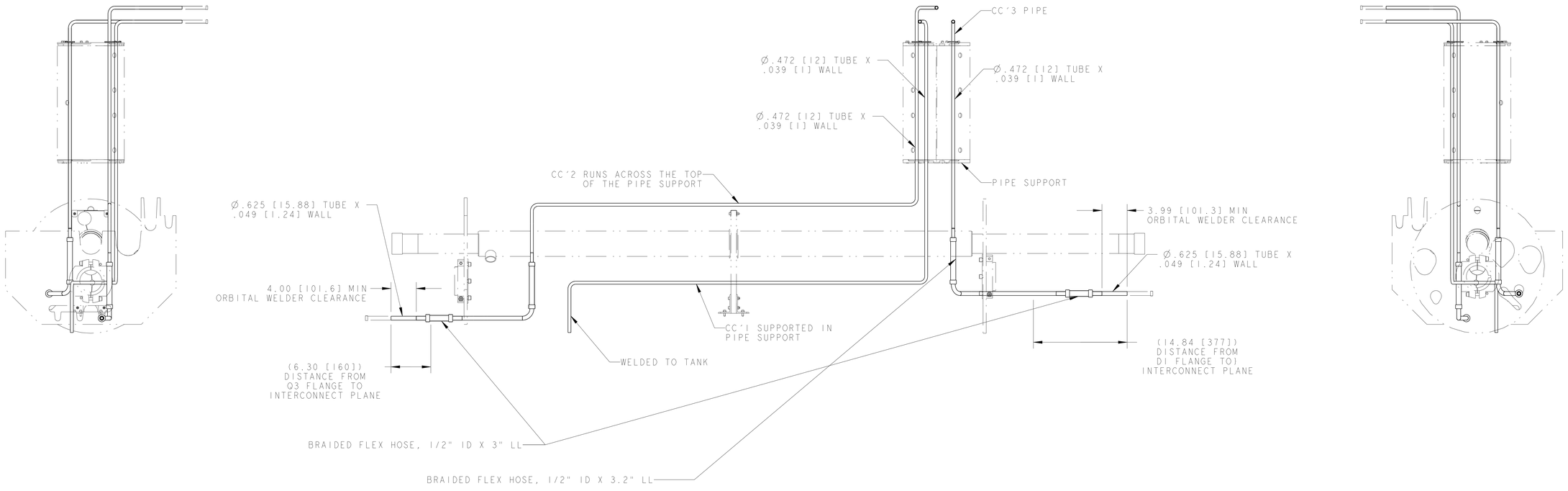

SCALE ~5/32

DWG. NO. 2512266 SHEET NO. A 5

ERNEST ORLANDO LAWRENCE
BERKELEY NATIONAL LABORATORY
UNIVERSITY OF CALIFORNIA - BERKELEY

LHC IR FEEDBOX
CRYOGENICS
PIPING ASSEMBLY DFBXG, DFBXC

MICROFILMED:	DWG. TYPE: ASSEM	SHOWN ON: -	SCALE: ~3/32	DO NOT SCALE PRINTS
			SHEET 5 OF 10	
PATENT CLEAR:	DESIGN ACCT. NO.: Z5LCE2	CATEGORY CODE: LH2003	DWG. NO.: 2512266	SIZE: A / REV.: A

E1 & E2 LINES

SHOWN FOR REFERENCE ONLY

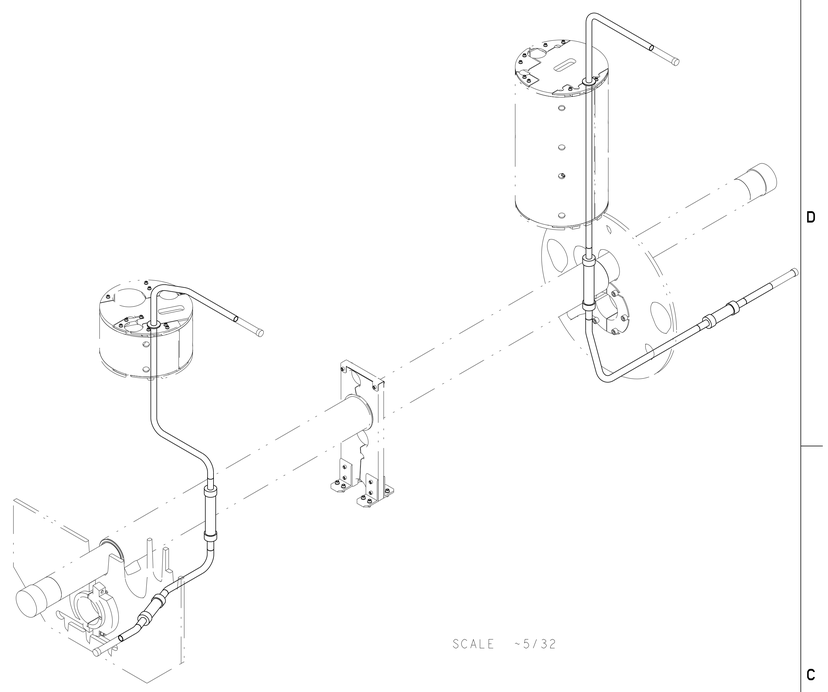

SCALE ~5/32

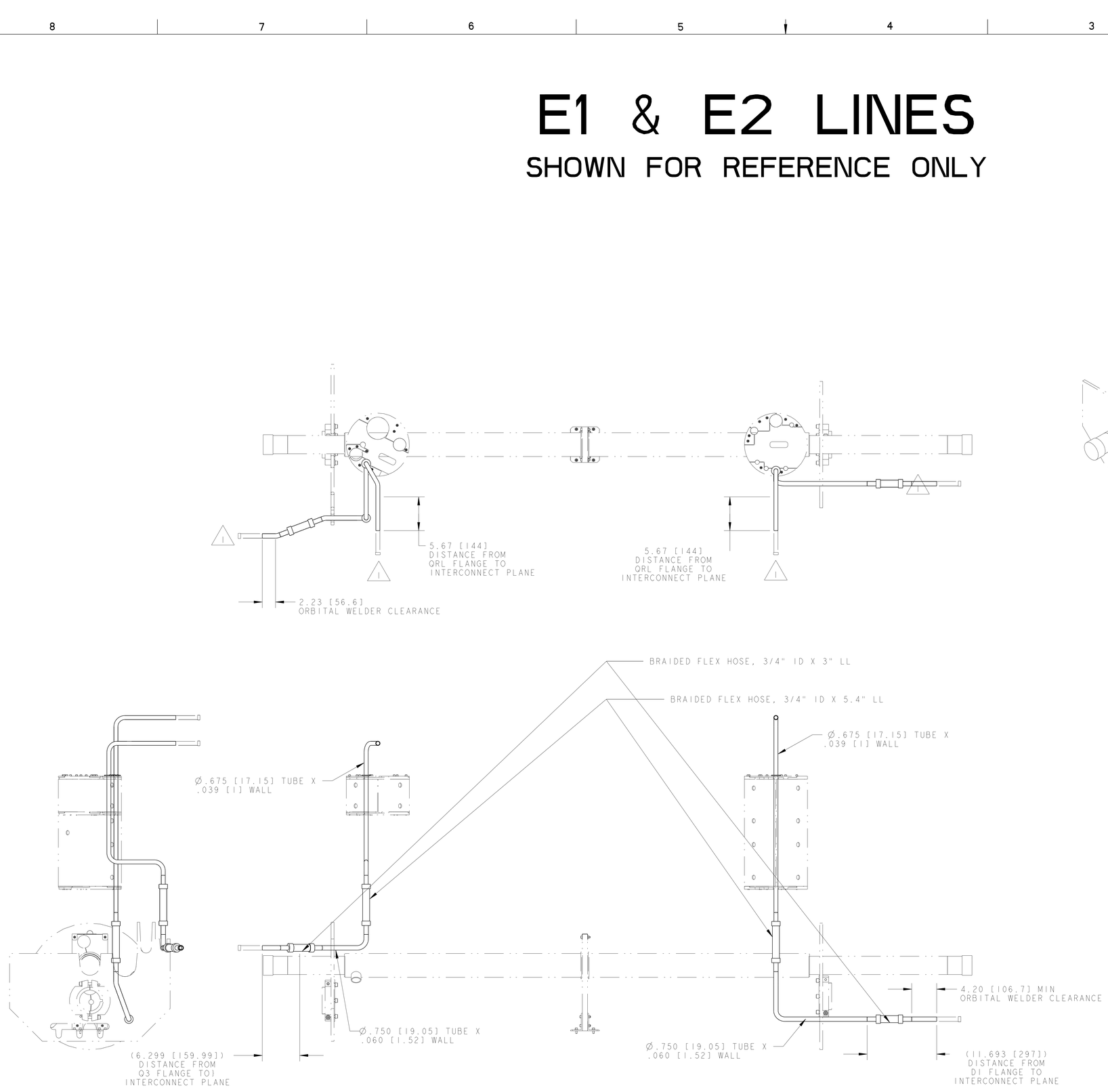

SCALE ~5/32

DWG. NO. 2512266 SHT. 6 REV. A

ERNEST ORLANDO LAWRENCE BERKELEY NATIONAL LABORATORY UNIVERSITY OF CALIFORNIA - BERKELEY				
LHC IR FEEDBOX CRYOGENICS PIPING ASSEMBLY DFBXG, DFBXC				
MICROFILMED:	DWG. TYPE: ASSEM	SHOWN ON: -	SCALE: ~3/32	DO NOT SCALE PRINTS
			SHEET 6 OF 10	
PATENT CLEAR:	DESIGN ACCT. NO.: Z5LCE2	CATEGORY CODE: LH2003	DWG. NO.: 2512266	SIZE: A / REV.: A

EX LINE

SHOWN FOR REFERENCE ONLY

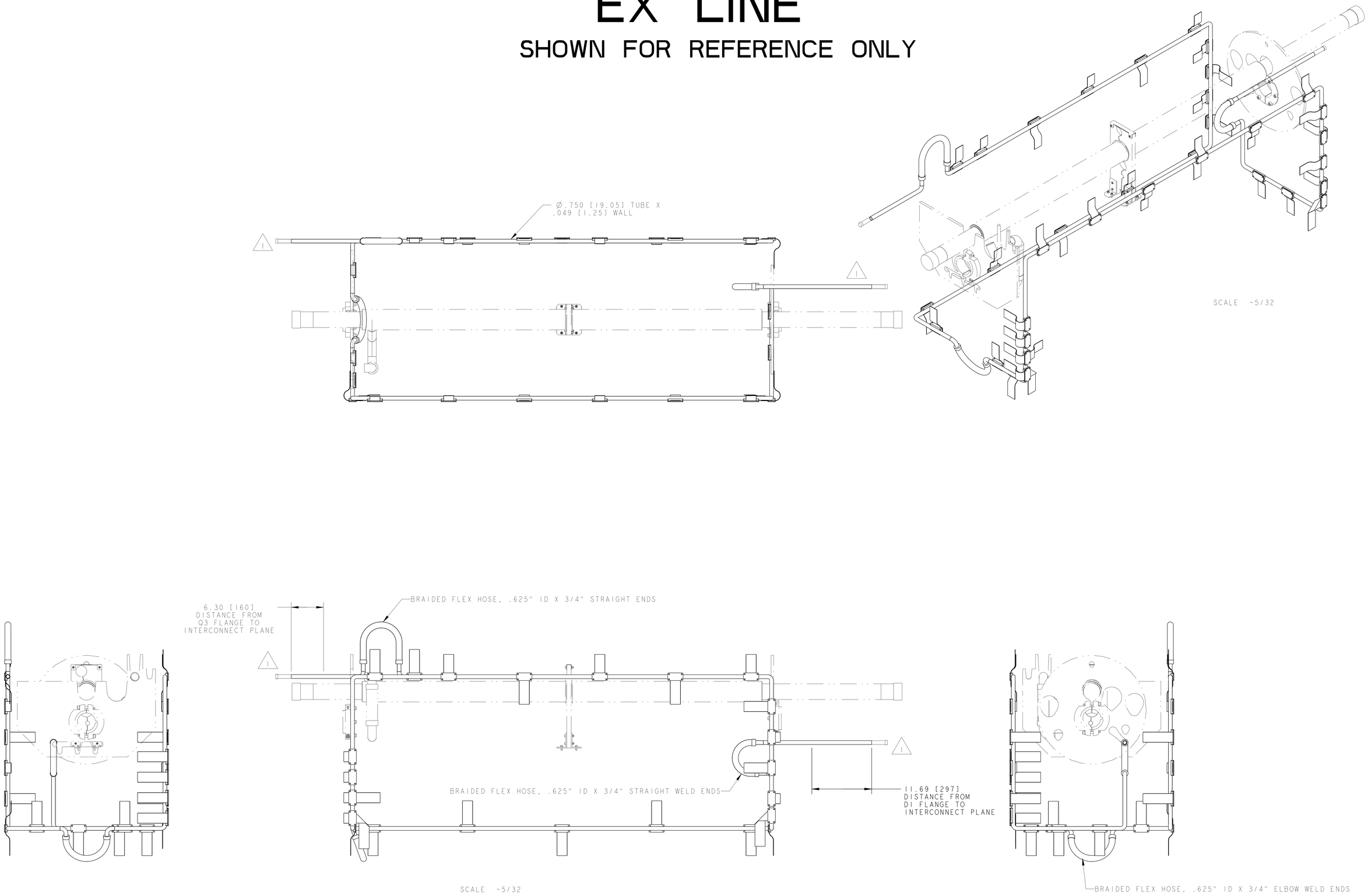

ERNEST ORLANDO LAWRENCE
BERKELEY NATIONAL LABORATORY
UNIVERSITY OF CALIFORNIA - BERKELEY

LHC IR FEEDBOX
CRYOGENICS
PIPING ASSEMBLY DFBXG, DFBXC

MICROFILMED:	DWG. TYPE	SHOWN ON	SCALE: ~3/32	DO NOT SCALE PRINTS
	ASSEM	-	SHEET 7 OF 10	
PATENT CLEAR:	DESIGN ACCT. NO.	CATEGORY CODE	DWG. NO.	SIZE / REV.
	Z5LCE2	LH2003	2512266	A

DWG. NO. 2512266 SIZE A REV. 7

XB & CY LINES

SHOWN FOR REFERENCE ONLY

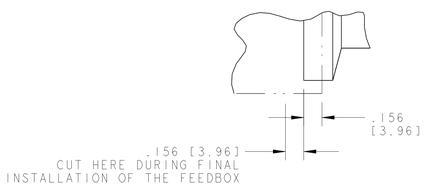

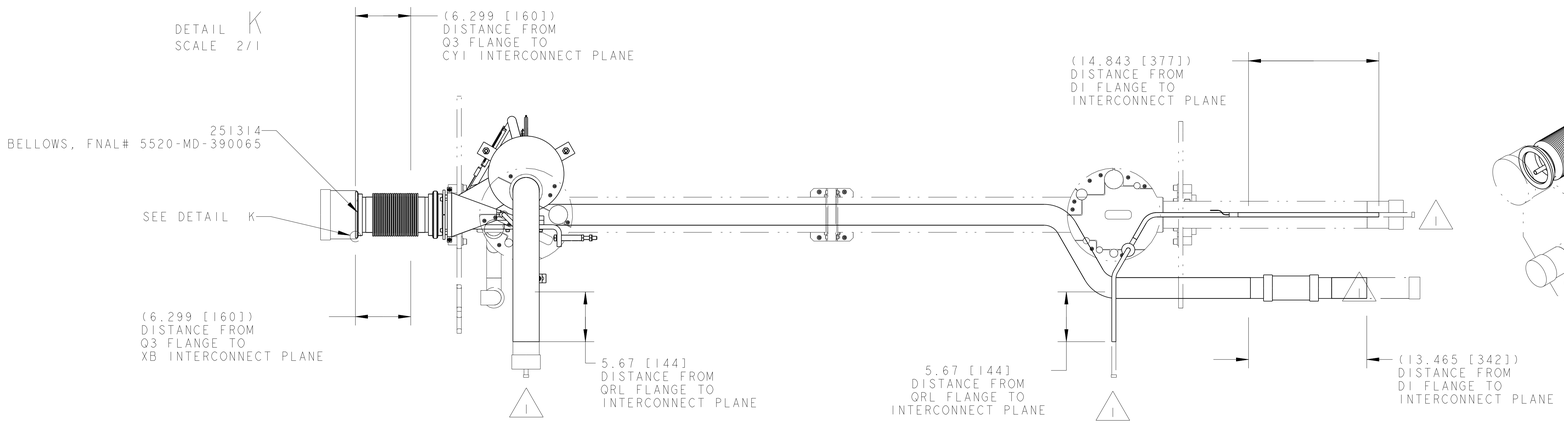

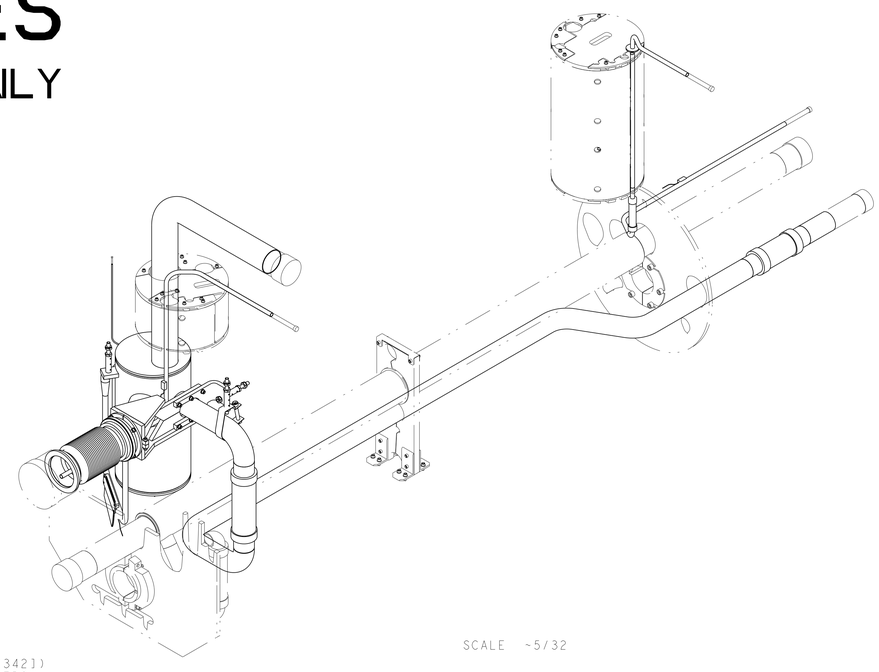

SCALE ~5/32

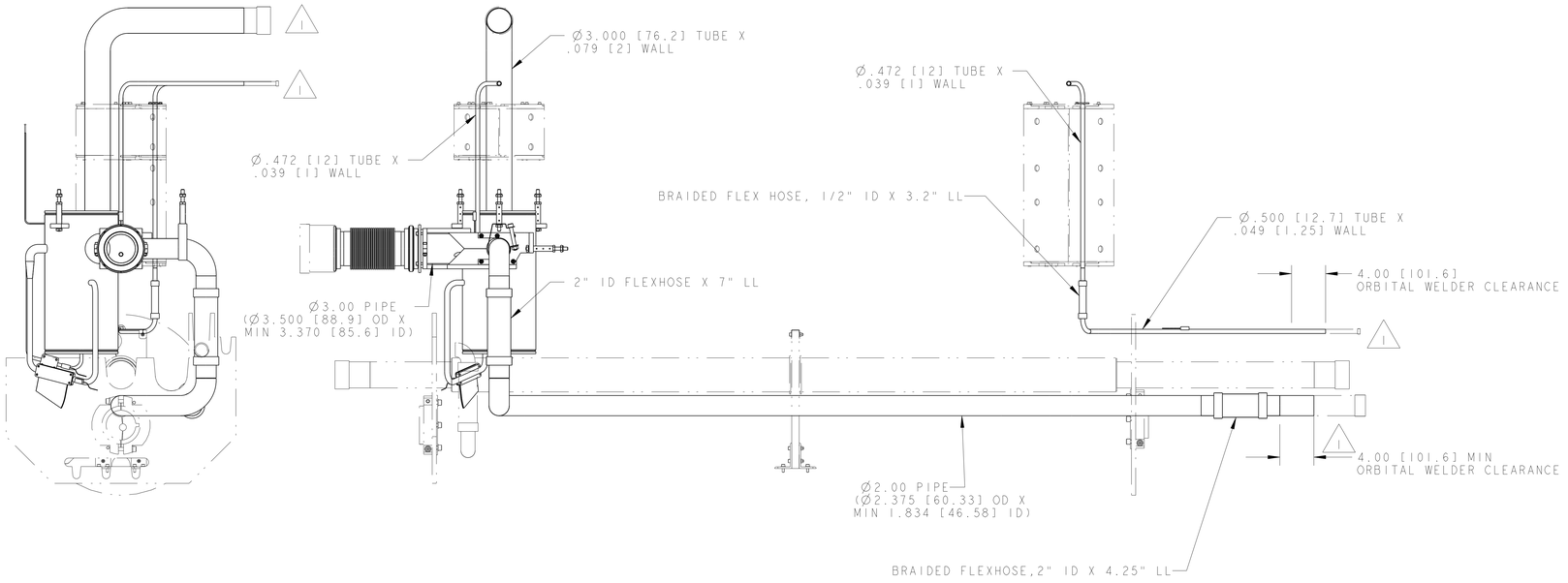

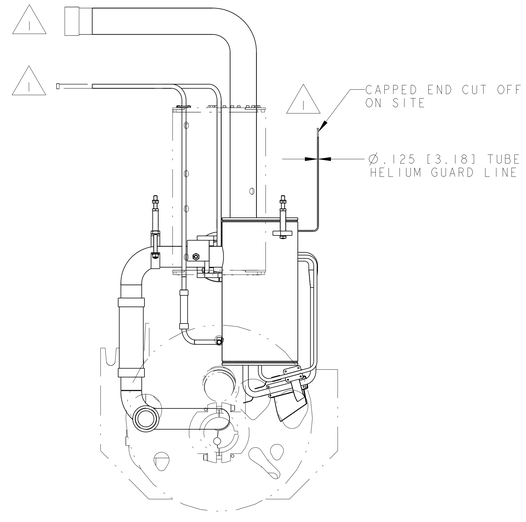

SCALE ~5/32

ERNEST ORLANDO LAWRENCE
BERKELEY NATIONAL LABORATORY
UNIVERSITY OF CALIFORNIA - BERKELEY

LHC IR FEEDBOX
CRYOGENICS
PIPING ASSEMBLY DFBXG, DFBXC

MICROFILMED:	DWG. TYPE: ASSEM	SHOWN ON: -	SCALE: ~3/32	DO NOT SCALE PRINTS
			SHEET 8 OF 10	
PATENT CLEAR:	DESIGN ACCT. NO.: Z5LCE2	CATEGORY CODE: LH2003	DWG. NO.: 2512266	SIZE: A / REV.: A

DWG. NO. 2512266 SHT/REV. 8 A

BEAM TUBE

SHOWN FOR REFERENCE ONLY

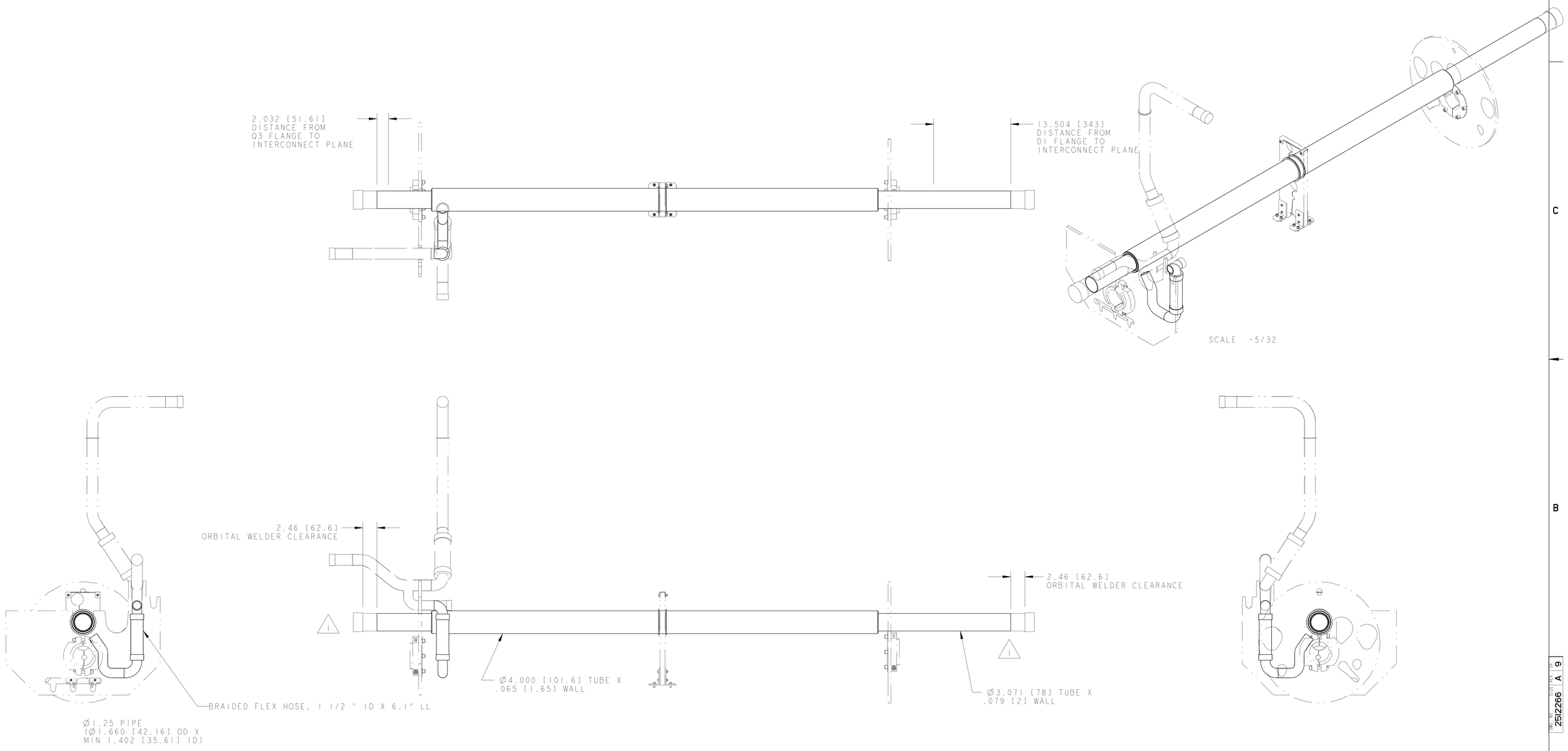

ERNEST ORLANDO LAWRENCE
BERKELEY NATIONAL LABORATORY
UNIVERSITY OF CALIFORNIA - BERKELEY

LHC IR FEEDBOX
CRYOGENICS
PIPING ASSEMBLY DFBXG, DFBXC

MICROFILMED:	DWG. TYPE	SHOWN ON	SCALE: ~3/32	DO NOT SCALE PRINTS
	ASSEM	-	SHEET 9 OF 10	
PATENT CLEAR:	DESIGN ACCT. NO.	CATEGORY CODE	DWG. NO.	SIZE / REV.
	Z5LCE2	LH2003	2512266	A

DWG. NO. 2512266 SIZE A REV. 9

BUS DUCT ASSEMBLY

SHOWN FOR REFERENCE ONLY

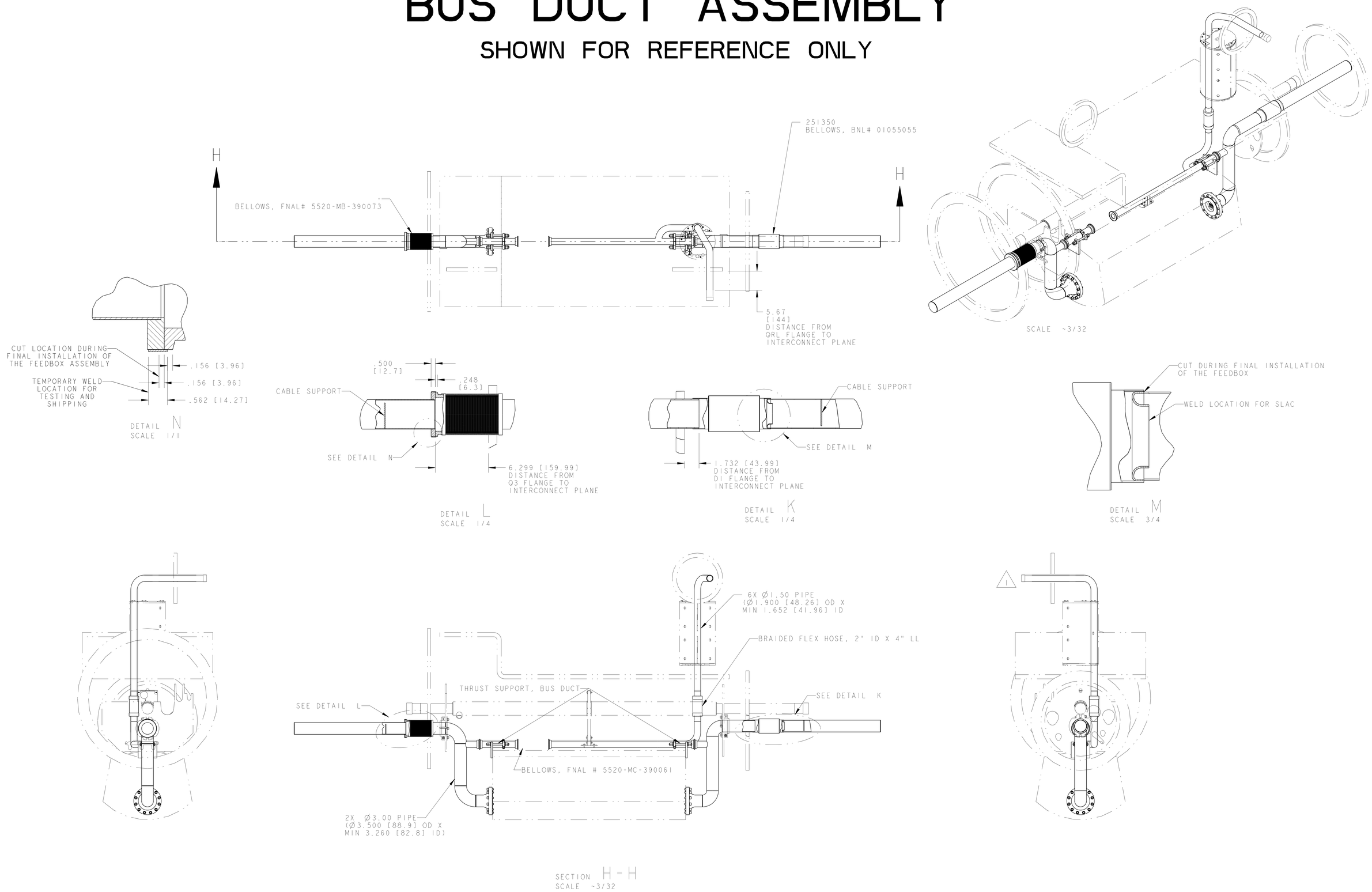

ERNEST ORLANDO LAWRENCE
BERKELEY NATIONAL LABORATORY
UNIVERSITY OF CALIFORNIA - BERKELEY

LHC IR FEEDBOX
CRYOGENICS
PIPING ASSEMBLY DFBXG, DFBXC

MICROFILMED:	DWG. TYPE	SHOWN ON	SCALE: ~3/32	DO NOT SCALE PRINTS
	ASSEM	-	SHEET 10 OF 10	
PATENT CLEAR:	DESIGN ACCT. NO.	CATEGORY CODE	DWG. NO.	SIZE / REV.
	Z5LCE2	LH2003	2512266	A

DWG. NO. 2512266 SIZE A REV. 10