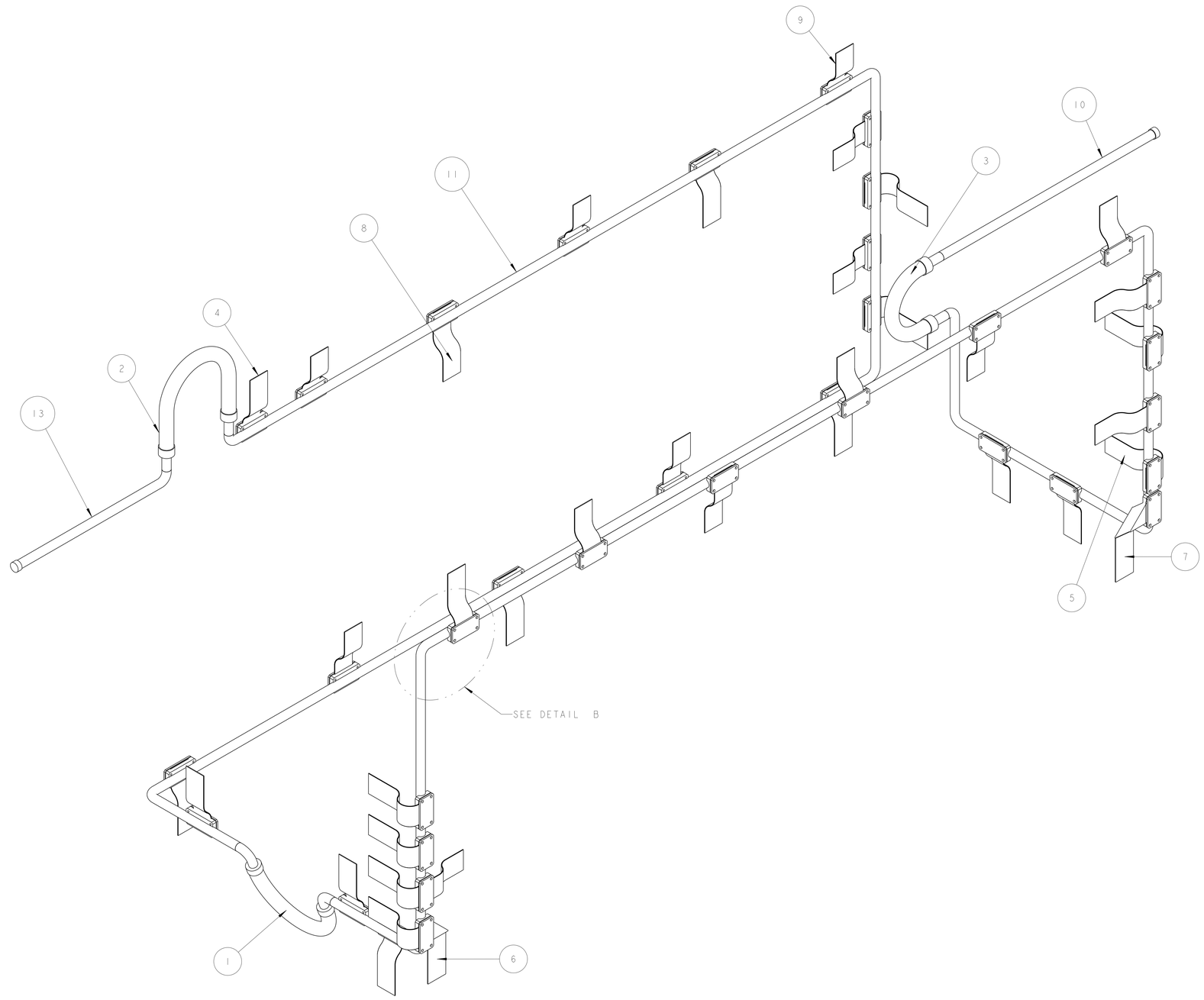

SCALE 9/32

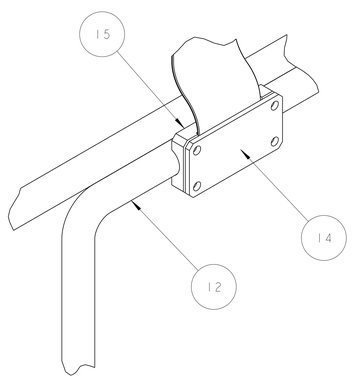

37X DETAIL B
SCALE 3/4

NOTES: (UNLESS OTHERWISE SPECIFIED)

1. THIS IS A CRYOGENIC VACUUM COMPONENT.
2. WELDING PROCEDURE: PER VENDOR SPECIFICATION WITH LBNL APPROVAL.
3. CLEANING PROCEDURE : PER VENDOR SPECIFICATION WITH LBNL APPROVAL.
4. PACKAGING AND STORAGE PROCEDURE OF THE COMPONENTS: PER VENDOR SPECIFICATION WITH LBNL APPROVAL.
5. DIMENSIONS AND TOLERANCING PER ANSI Y14.5M-1982. UNITS ARE IN INCHES [mm] UNLESS OTHERWISE SPECIFIED.
6. USE OF SULFUR OR SILICONE BEARING OILS, LUBRICANTS, OR COOLANTS ARE STRICTLY PROHIBITED.
7. USE OF RESIN OR RUBBER BONDED ABRASIVES UNDER POWER IS STRICTLY PROHIBITED. USE VITREOUS BONDED ABRASIVES ONLY.
8. VENDOR SUGGESTED CHANGES TO WELD PREPS; SUBJECT TO LBNL APPROVAL.
9. FITTINGS MAY BE USED IN PLACE OF BENDS; SUBJECT TO LBNL APPROVAL.
10. VENDOR SUGGESTED CHANGES TO TOLERANCES TO FACILITATE FABRICATION OR ASSEMBLY; SUBECT TO LBNL APPROVAL.
11. REMOVE ALL THE BURRS AND REAM THE ENDS FOR CIRCULARITY AND CLEAN ENDS.
12. TUBE END SURFACE MUST BE PERPENDICULAR TO THE TUBE AXIS WITHIN +/-.010.
13. PERFORM ACCEPTANCE TESTS PER LBNL SPECIFICATION M989.
14. A MARK DESIGNATING THE INSTALLED LENGTH WILL BE UTILIZED DURING FINAL INSTALLATION OF THE FEEDBOX ASSEMBLY. MARK, SCRIBE OR ETCH THIS LOCATION IN A PERMANENT MANNER, SUBJECT TO LBNL APPROVAL, TO AN ACCURACY OF ±0.063".
15. PROVIDE A MINIMUM LENGTH OF 4.0" OF STRAIGHT, SMOOTH PIPE ON THE INDICATED SIDE OF THE INSTALLED LENGTH MARK FOR PIPE WELDING DURING FINAL INSTALLATION OF THE FEEDBOX ASSEMBLY.
16. PIPE MUST BE STRAIGHT AND SMOOTH (NO BUMPS) FOR 1.5" ON EITHER SIDE OF THE CENTER-PLANE OF THE SUPPORT.
17. CAP BOTH ENDS OF PIPE TO FACILITATE ACCEPTANCE TESTS.

B

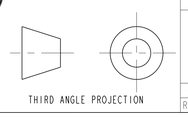

THIRD ANGLE PROJECTION

REV	DWG	CHK	ZONE	DATE	CHANGES
B	ARH	SPV		12-05-02	ADDED SHT 5, ADDED CERN BOX TO ALL SHTS, ADDED NOTE 15 & 16 CALLOUT TO DWG VIEW, REVISED DECIMAL PLACES, SHT 3, CHANGED DESCRIPTION CALLOUT FOR BOM ITEMS 10-13, MINOR DRAWING DIMENSIONAL CHANGES, ADDED "LL" DIM TO BOM ITEMS 1, 2 & 3, REVISED DRAWING NOTE 16
A	ARH	DPO		9-17-02	INITIAL RELEASE

ITEM	PART NO	REQD	DESCRIPTION	MATERIAL
15	25M875	35	CLAMP BASE PLATE, 3/4 TUBE	COPPER, OFHC, C101
14	251427	35	CLAMP COVER	OFHC, C101
B 13	-	1	TUBE, PER ASTM A269	SS 304L
B 12	-	1	TUBE, PER ASTM A269	SS 304L
B 11	-	1	TUBE, PER ASTM A269	SS 304L
B 10	-	1	TUBE , PER ASTM A269	SS 304L
9	-	6	STANDARD BRAIDED COPPER STRAP, 1/8" X 1.00"	OFC COPPER BRAID
8	-	10	STANDARD BRAIDED COPPER STRAP, 1/8" X 1.00"	OFC COPPER BRAID
7	-	1	STANDARD BRAIDED COPPER STRAP, 1/8" X 1.00"	OFC COPPER BRAID
6	-	1	STANDARD BRAIDED COPPER STRAP, 1/8" X 1.00"	OFC COPPER BRAID
5	-	8	STANDARD BRAIDED COPPER STRAP, 1/8" X 1.00"	OFC COPPER BRAID
4	-	11	STANDARD BRAIDED COPPER STRAP, 1/8" X 1.00"	OFC COPPER BRAID
B 3	-	1	BRAIDED FLEX HOSE, .625" ID X 3/4" STRAIGHT WELD ENDS, 9.9"LL	SS 300 SERIES
B 2	-	1	BRAIDED FLEX HOSE, .625" ID X 3/4" STRAIGHT ENDS, 17.7"LL	SS 300 SERIES
B 1	-	1	BRAIDED FLEX HOSE, .625" ID X 3/4" ELBOW WELD ENDS, 12.8"LL	SS 300 SERIES

UNLESS OTHERWISE SPECIFIED
TOLERANCES: X.X ± 0.1 FRAC. ± 1/64; X.XX ± 0.03 Angles ± 1.00°; X.XXX ± 0.010 FINISH 125 √
DO NOT SCALE PRINT
THREADS ARE CLASS 2
CHAMFER ENDS OF ALL SCREW THREADS 30°
CUT ROUND, 1.5 THREAD RELIEF ON MACHINED THREADS
BREAK EDGES .016 MAX. ON MACHINED WORK
REMOVE BURRS, WELD SPLATTER & LOOSE SCALE
IN ACCORDANCE WITH ASME Y14.5M & B46.1

SHOP ORDERS
ACCT NO. - ML REQD
SEQ NO. -
DATE -
ISSD -
SEQ NO. -
DATE -
REQD -
SURFACE TREATMT -
IDENT METHOD TAG
PROJECT NUMBER N/A
PROJECT NAME N/A
DWG BY R LA MANITIA DATE 29-Jul-02
CHK BY Jon Zbasnik DATE 4-02-02
APR BY Jon Zbasnik DATE 4-02-02

ERNEST ORLANDO LAWRENCE BERKELEY NATIONAL LABORATORY
UNIVERSITY OF CALIFORNIA - BERKELEY

LHC IR FEEDBOX
CRYOGENICS
PIPE, EX

MICROFILMED: | DWG. TYPE ASSEM | SHOWN ON - | SCALE: 7/32 | DO NOT SCALE PRINTS
PATENT CLEAR: | DESIGN ACCT. NO. Z5LCE2 | CATEGORY CODE LH2003 | SHEET 1 OF 5 | DWG. NO. 2512126 | SIZE B | REV. B

DWG. NO. 2512126 REV. B SHT. 1 OF 5

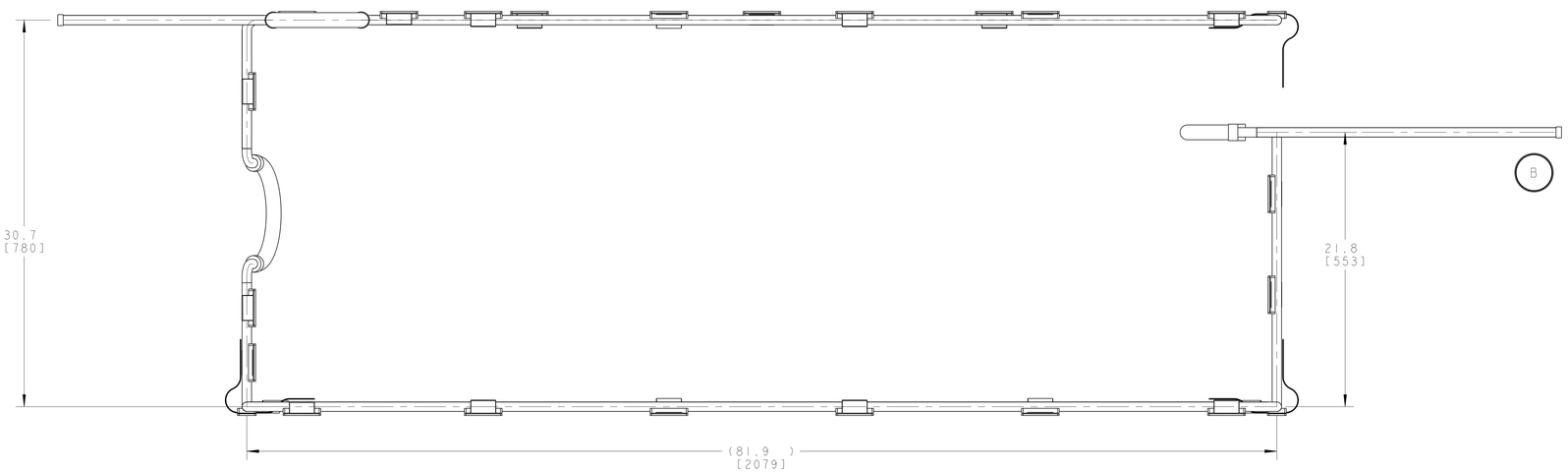

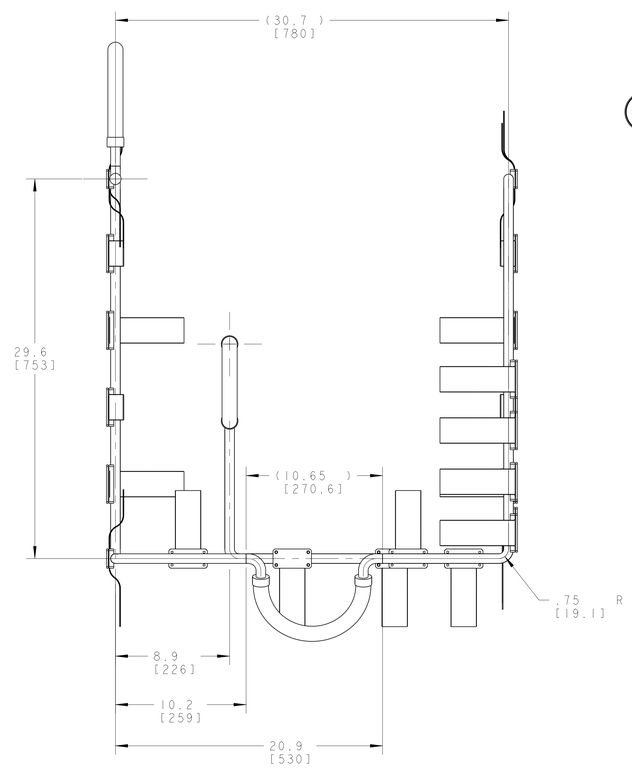

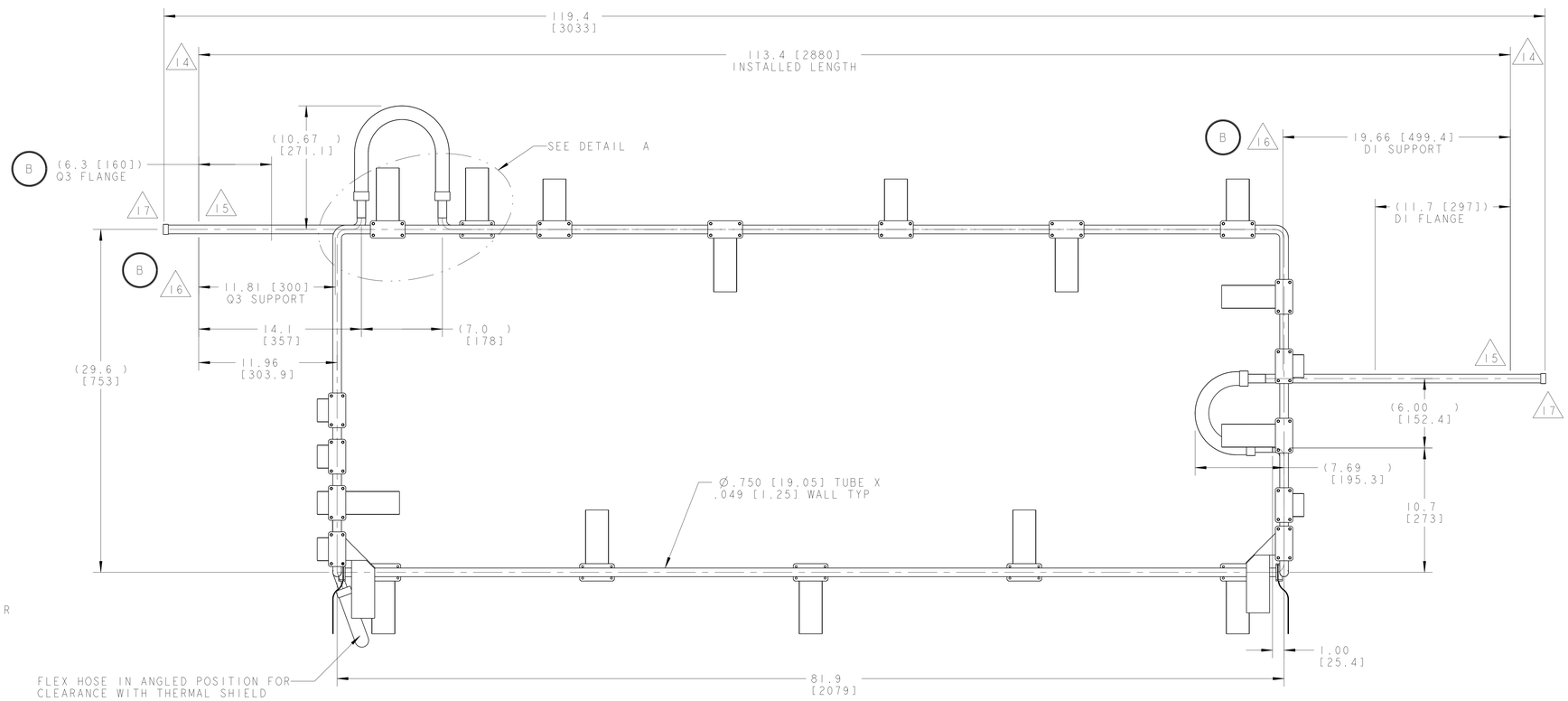

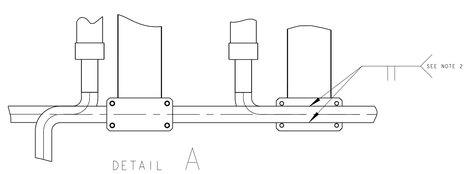

DETAIL A
SCALE 3/8

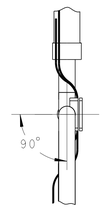

ERNEST ORLANDO LAWRENCE
BERKELEY NATIONAL LABORATORY
UNIVERSITY OF CALIFORNIA · BERKELEY

LHC IR FEEDBOX
CRYOGENICS
PIPE, EX

MICROFILMED:	DWG. TYPE	SHOWN ON	SCALE: 7/32	DO NOT SCALE PRINTS
	ASSEM	-	SHEET 2 OF 5	
PATENT CLEAR:	DESIGN ACCT. NO.	CATEGORY CODE	DWG. NO.	SIZE / REV.
	Z5LCE2	LH2003	2512126	B

DWG. NO. 2512126 SIZE B REV. SHT. 2

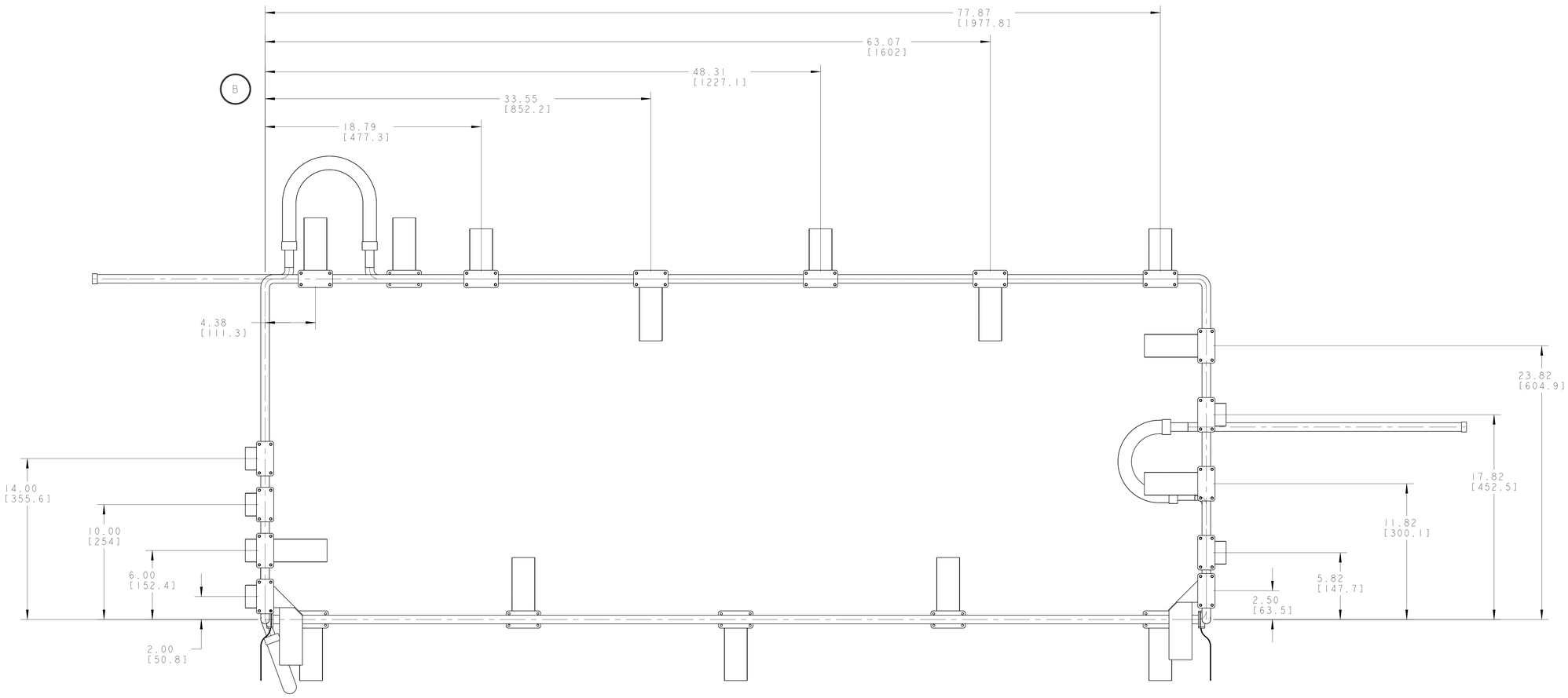

RIGHT SIDE VIEW SCALE 1/4

ERNEST ORLANDO LAWRENCE
BERKELEY NATIONAL LABORATORY
UNIVERSITY OF CALIFORNIA - BERKELEY

LHC IR FEEDBOX
CRYOGENICS
PIPE, EX

MICROFILMED:	DWG. TYPE	SHOWN ON	SCALE: 1/32	DO NOT SCALE PRINTS
	ASSEM	-	SHEET 3 OF 5	
PATENT CLEAR:	DESIGN ACCT. NO.	CATEGORY CODE	DWG. NO.	SIZE / REV.
	Z5LCE2	LH2003	2512126	B

DWG. NO. 2512126 B | 3

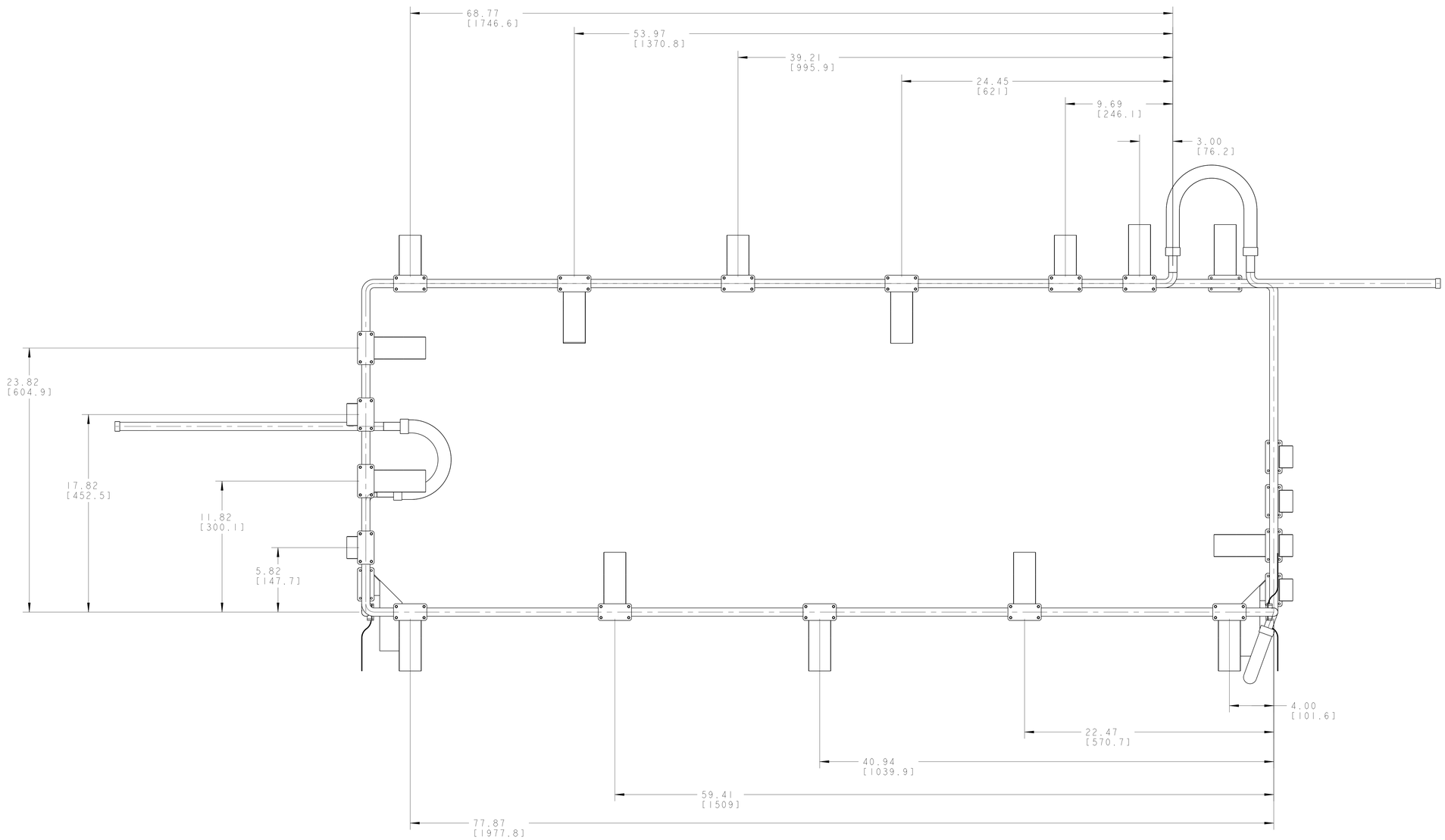

LEFT SIDE VIEW SCALE 1/4

ERNEST ORLANDO LAWRENCE
BERKELEY NATIONAL LABORATORY
UNIVERSITY OF CALIFORNIA - BERKELEY

LHC IR FEEDBOX
CRYOGENICS
PIPE, EX

MICROFILMED:	DWG. TYPE	SHOWN ON	SCALE: 7/32	DO NOT SCALE PRINTS
	ASSEM	-	SHEET 4 OF 5	
PATENT CLEAR:	DESIGN ACCT. NO.	CATEGORY CODE	DWG. NO.	SIZE / REV.
	Z5LCE2	LH2003	2512126	B

DWG. NO. 2512126 SHEET 4 OF 5 REV. B

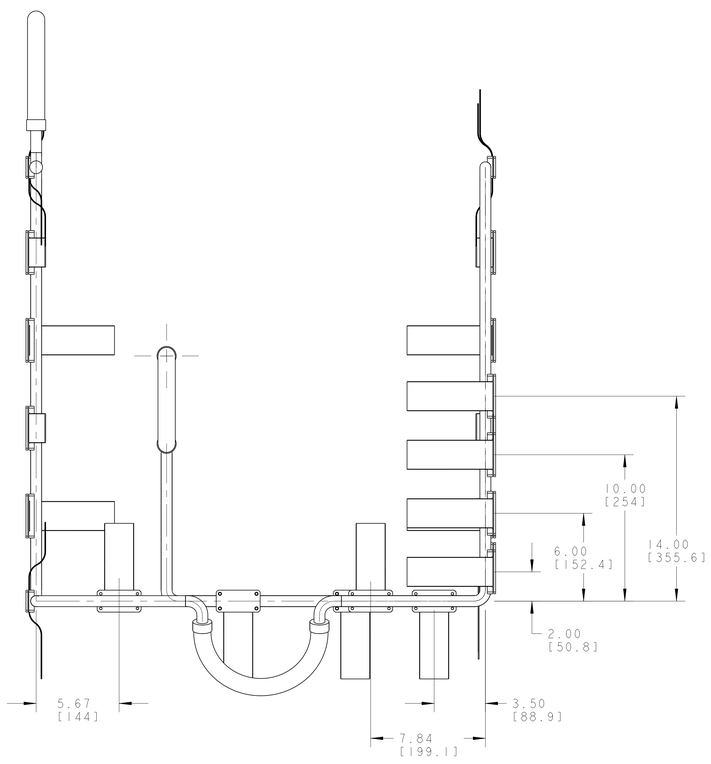

FRONT VIEW SCALE 1/4

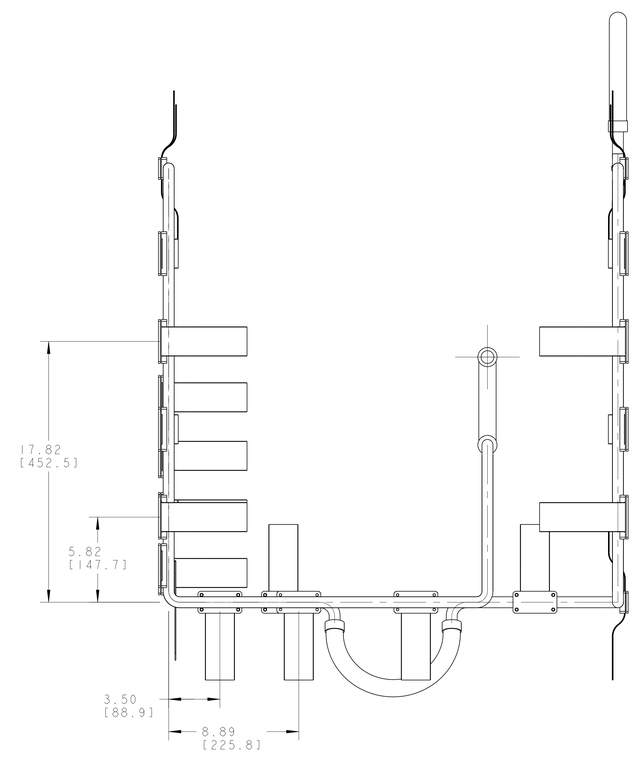

REAR VIEW SCALE 1/4

ERNEST ORLANDO LAWRENCE
BERKELEY NATIONAL LABORATORY
UNIVERSITY OF CALIFORNIA - BERKELEY

LHC IR FEEDBOX
CRYOGENICS
PIPE, EX

MICROFILMED:	DWG. TYPE	SHOWN ON	SCALE: 7/32	DO NOT SCALE PRINTS
	ASSEM	-	SHEET 5 OF 5	
PATENT CLEAR:	DESIGN ACCT. NO.	CATEGORY CODE	DWG. NO.	SIZE / REV.
	Z5LCE2	LH2003	2512126	B

DWG. NO. 2512126 | SIZE B | REV. 5