DWG. NO.	SIZE	REV.	SH.
2511854	A	1	

DESCRIPTION	MATERIAL	MAT. LOCATION
PIPE, 6" (6.625) X .109 WALL	304L STAINLESS	-

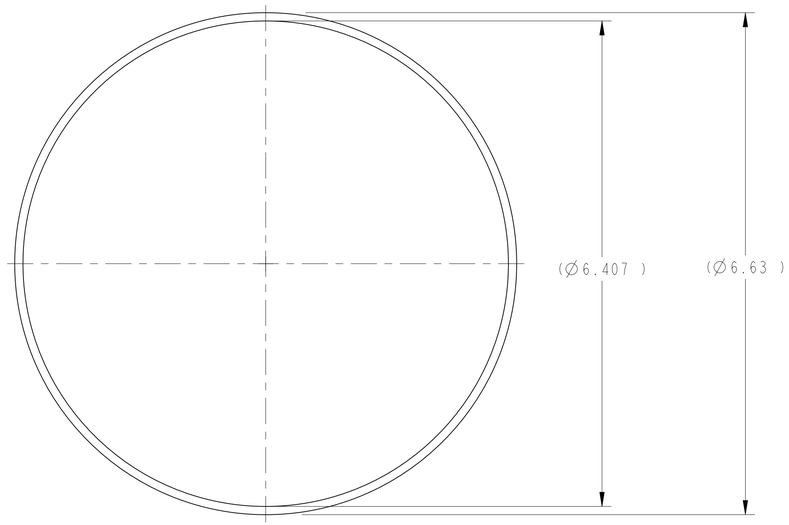

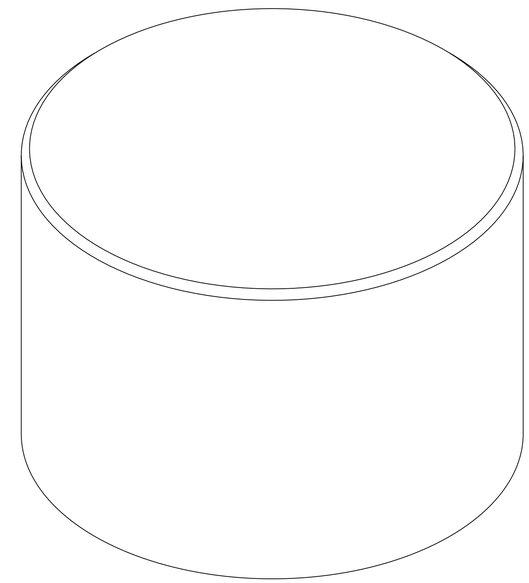

SCALE 1.000

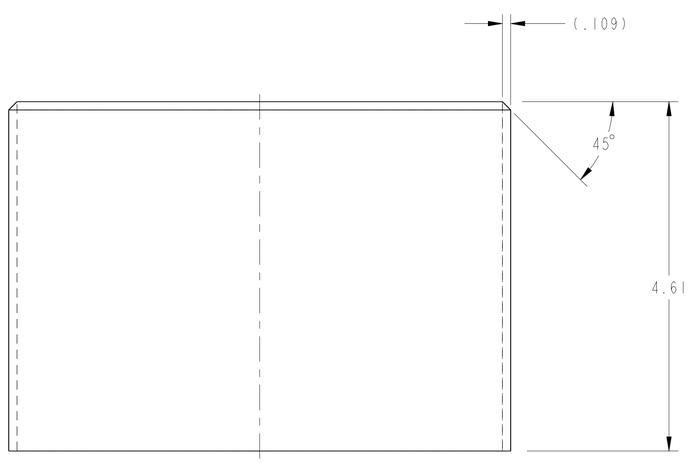

NOTES: UNLESS OTHERWISE SPECIFIED,

1. DIMENSIONS AND TOLERANCING PER ANSI Y14.5M-1982 UNITS ARE IN INCHES UNLESS OTHERWISE SPECIFIED.
2. USE OF SULFUR OR SILICONE BEARING OILS, LUBRICANTS, OR COOLANTS ARE STRICTLY PROHIBITED
3. USE OF RESIN OR RUBBER BONDED ADRASIVES UNDER POWER IS STRICTLY PROHIBITED. USE VITREOUS BONDED ABRASIVES ONLY.
4. CLEAN AFTER MACHINING PER VENDOR SPECIFICATION; SUBJECT TO LBNL APPROVAL.
5. VENDOR SUGGESTED CHANGES TO WELD PREPS; SUBJECT TO LBNL APPROVAL.
6. PROTECT FINISHED PART BY BAGGING OR SIMILAR METHOD TO PROTECT AND MAINTAIN CLEANLINESS DURING SHIPMENT AND STORAGE.
7. ESTIMATED WEIGHT = 3 LBS

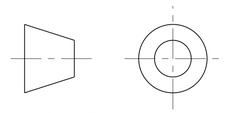

THIRD ANGLE PROJECTION

REV	DWG	CHK	ZONE	DATE	CHANGES
A	RLM	DPO		10-4-02	INITIAL RELEASE

UNLESS OTHERWISE SPECIFIED

TOLERANCES		
	X.X ± 0.1	FRAC. ± 1/64
	X.XX ± 0.03	Angles ± 1.00°
	X.XXX ± 0.010	FINISH 125/ (µin)

DO NOT SCALE PRINT

THREADS ARE CLASS 2

CHAMFER ENDS OF ALL SCREW TREADS 30°

CUT ROUND, 1.5 THREAD RELIEF ON MACHINED THREADS

BREAK EDGES .016 MAX. ON MACHINED WORK

REMOVE BURRS, WELD SPLATTER & LOOSE SCALE

IN ACCORDANCE WITH ASME Y14.5M & B46.1

SHOP ORDERS

ACCT NO.	NO. REQD	DATE ISSD	-
DEL TO		DATE REQD	-
SURFACE TREATMT	-		
IDENT METHOD	TAG		
PROJECT NUMBER	N/A		
PROJECT NAME	N/A		
DWG BY	KNOLLS	DATE	22-Aug-01
CHK BY	Jon Zbasnik	DATE	21-Apr-02
APR BY	Jon Zbasnik	DATE	21-Apr-02

SER. NO. -

ERNEST ORLANDO LAWRENCE BERKELEY NATIONAL LABORATORY
UNIVERSITY OF CALIFORNIA - BERKELEY

LHC IR FEEDBOX
ELECTRICAL
BODY, LBX DIAGNOSTIC

MICROFILMED:	DWG. TYPE	SHOWN ON	SCALE: 1.000	DO NOT SCALE PRINTS
	PART	251163	SHEET 1 OF 1	
PATENT CLEAR:	DESIGN ACCT. NO.	CATEGORY CODE	DWG. NO.	SIZE / REV.
	Z5LCE2	LH2004	2511854	A

Dwg. File: 251185_Model File: PIPE-6CH_55_LBX