| DWG. NO. | SIZE | REV. | SH. |
|---|---|---|---|
| 2511824 | | A | 1 |

| ITEM | PART NO | REQD | DESCRIPTION | MATERIAL |
|---|---|---|---|---|
| 2 | - | | BI-DIRECTIONAL TOP PLATE | DUFF NORTON |
| 1 | - | | MET9015 SCREW ACTUATOR, 15 TONS | DUFF NORTON |

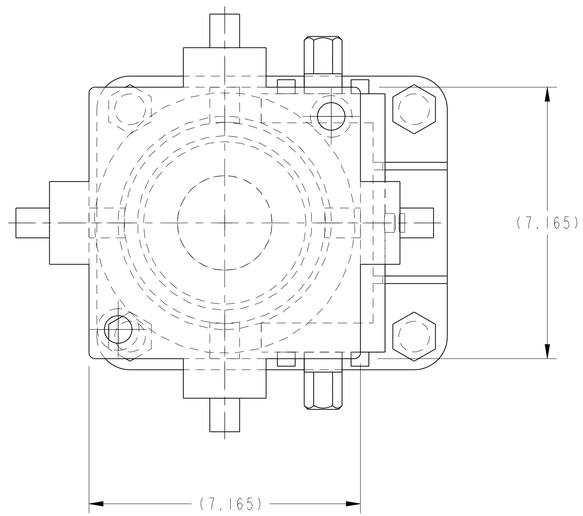


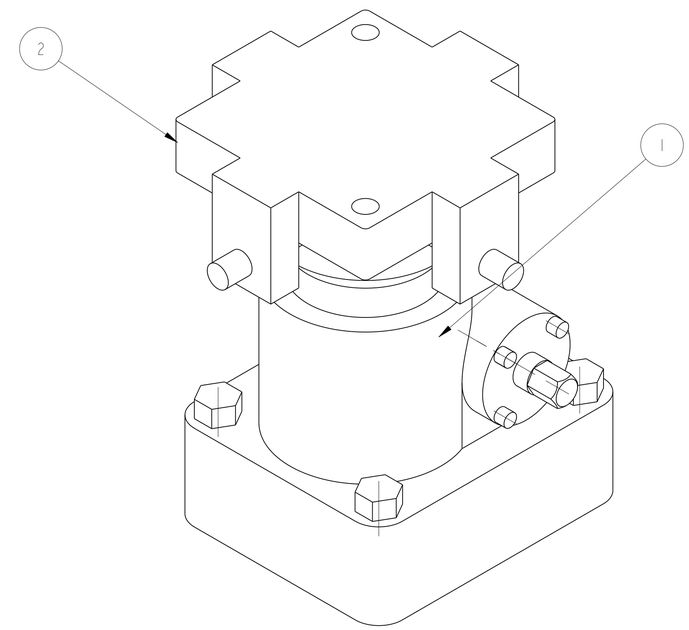


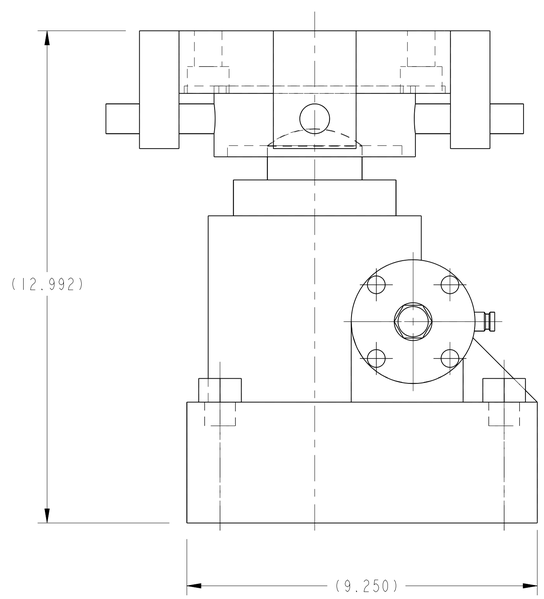


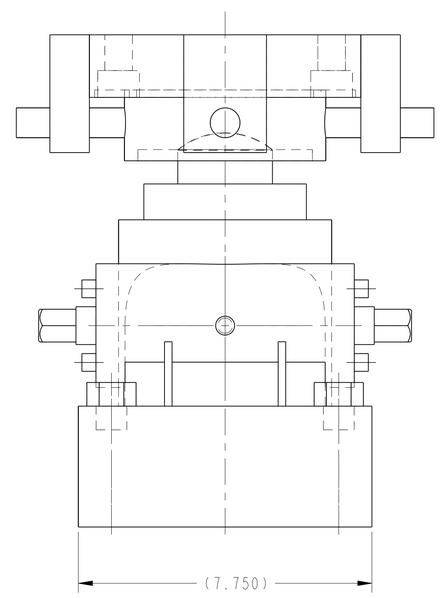


NOTES: UNLESS OTHERWISE SPECIFIED,

1. FOR FURTHER INFORMATION PERTAINING TO THIS PARTICULAR JACK ASSEMBLY REFER TO CERN DRAWING: 232-268

2. PROTECT FINISHED PART BY BAGGING OR SIMILAR METHOD PROTECT AND MAINTAIN CLEANLINESS DURING SHIPMENT AND STORAGE.

3. ESTIMATED WEIGHT = 159 LBS

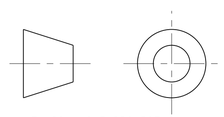

THIRD ANGLE PROJECTION

| REV | DWG | CHK | ZONE | DATE | CHANGES |
|---|---|---|---|---|---|
| A | MJK | DPO | | 9/11/02 | INITIAL RELEASE |

UNLESS OTHERWISE SPECIFIED

| TOLERANCES | | |
|---|---|---|
| | X.X ± 0.1 | FRAC. ± 1/64 |
| | X.XX ± 0.03 | Angles ± 1.00° |
| | X.XXX ± 0.010 | FINISH 125/(μin) |

DO NOT SCALE PRINT

THREADS ARE CLASS 2
CHAMFER ENDS OF ALL SCREW TREADS 30°
CUT ROUND, 1.5 THREAD RELIEF ON MACHINED THREADS
BREAK EDGES .016 MAX. ON MACHINED WORK
REMOVE BURRS, WELD SPLATTER & LOOSE SCALE
IN ACCORDANCE WITH ASME Y14.5M & B46.1

SHOP ORDERS

| | | | |
|---|---|---|---|
| ACCT NO. | NO. REQD | SER NO. | - |
| DEL TO | | DATE ISSD | - |
| | | DATE REQD | - |
| SURFACE TREATMT | - | | |
| IDENT METHOD | TAG | | |
| PROJECT NUMBER | N/A | | |
| PROJECT NAME | N/A | | |
| DWG BY | KNOLLS | DATE | 04-Sep-01 |
| CHK BY | Jon Zbasnik | DATE | |
| APR BY | Jon Zbasnik | DATE | |

ERNEST ORLANDO LAWRENCE
BERKELEY NATIONAL LABORATORY
UNIVERSITY OF CALIFORNIA - BERKELEY

LHC IR FEEDBOX
MAJOR ASSEMBLY
ISR JACK

| MICROFILMED: | DWG. TYPE | SHOWN ON | SCALE: 0.500 | DO NOT SCALE PRINTS |
|---|---|---|---|---|
| | ASSEM | | SHEET 1 OF 1 | |
| PATENT CLEAR: | DESIGN ACCT. NO. | CATEGORY CODE | DWG. NO. | SIZE / REV. |
| | Z5LCE2 | LH2001 | 2511824 | A |

Dwg. File: 2511824 Model File: JACK_15_TON