DESCRIPTION	MATERIAL	MAT. LOCATION
	304L STAINLESS	-

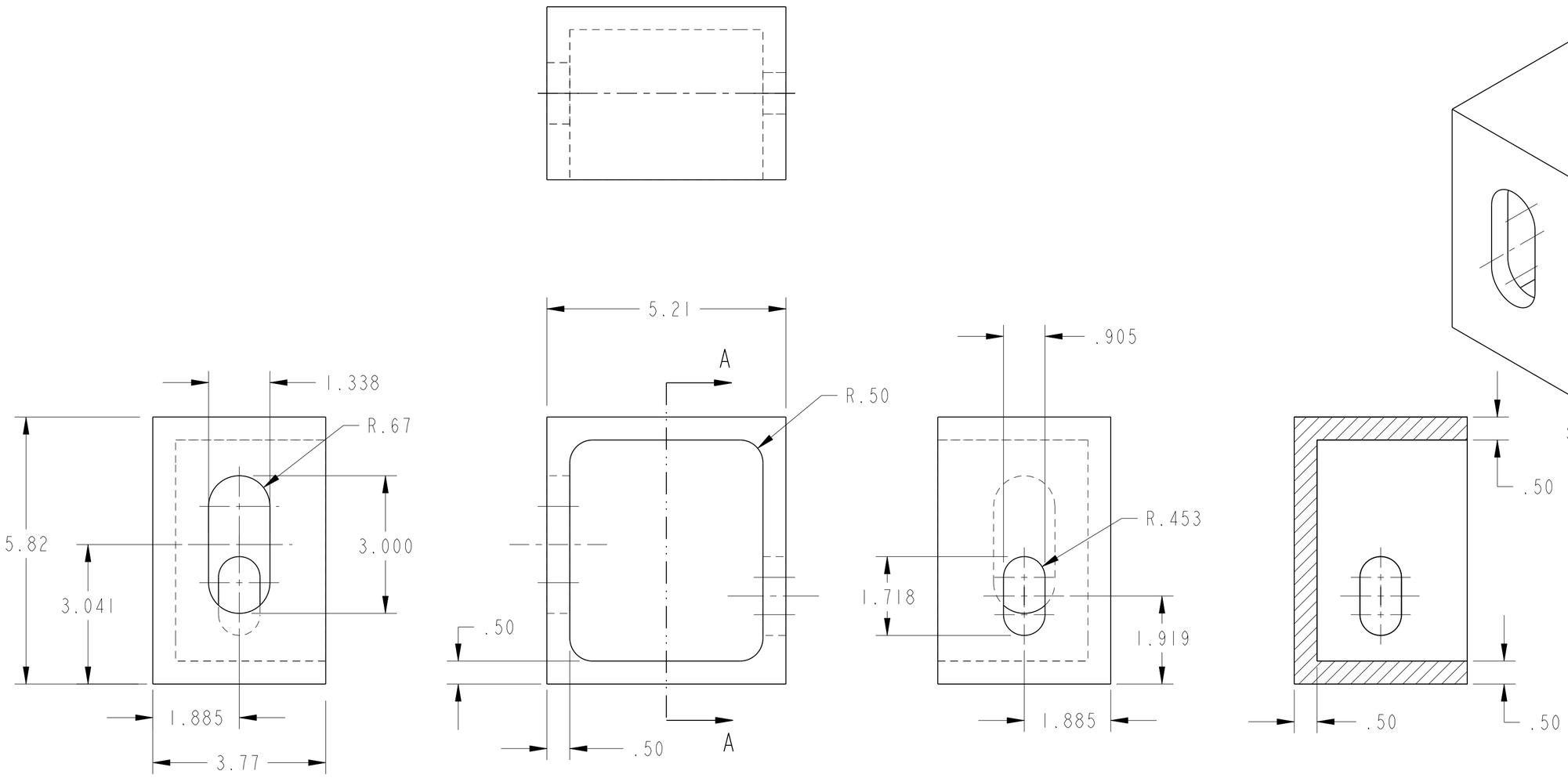

SECTION A-A

NOTES: UNLESS OTHERWISE SPECIFIED,

1) POSITIONAL TOLERANCES AND DATUM FEATURES OF SIZE APPLY REGARDLESS OF FEATURE SIZE

2) PROTECT FINISHED PART BY BAGGING OR SIMILAR METHOD PROTECT AND MAINTAIN CLEANLINESS DURING SHIPMENT AND STORAGE.

7. ESTIMATED WEIGHT = 14 LBS

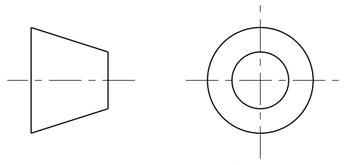

THIRD ANGLE PROJECTION

REV	DWG	CHK	ZONE	DATE	CHANGES
A	MJK	DPO		9/11/02	INITIAL RELEASE

UNLESS OTHERWISE SPECIFIED

TOLERANCES		
	X.X ± 0.1	FRAC. ± 1/64
	X.XX ± 0.02	Angles ± 1.00°
	X.XXX ± 0.010	FINISH 125 √(μin)

DO NOT SCALE PRINT

THREADS ARE CLASS 2
CHAMFER ENDS OF ALL SCREW TREADS 30°
CUT ROUND, 1.5 THREAD RELIEF ON MACHINED THREADS
BREAK EDGES .016 MAX. ON MACHINED WORK
REMOVE BURRS, WELD SPLATTER & LOOSE SCALE
IN ACCORDANCE WITH ASME Y14.5M & B46.1

SHOP ORDERS

SER NO.	-		
ACCT NO.		NO. REQD	DATE ISSD -
DEL TO			DATE REQD -
SURFACE TREATMT	-		
IDENT METHOD	TAG		
PROJECT NUMBER	N/A		
PROJECT NAME	N/A		
DWG BY	KNOLLS		DATE 30-Aug-01
CHK BY	Jon Zbasnik		DATE 4/2/02
APR BY	Jon Zbasnik		DATE 4/2/02

ERNEST ORLANDO LAWRENCE BERKELEY NATIONAL LABORATORY
UNIVERSITY OF CALIFORNIA - BERKELEY

LHC IR FEEDBOX
MAJOR ASSEMBLY
Q3 MOUNTING BRACKET

MICROFILMED:	DWG. TYPE	SHOWN ON	SCALE: 0.500	DO NOT SCALE PRINTS
	PART		SHEET 1 OF 1	
PATENT CLEAR:	DESIGN ACCT. NO.	CATEGORY CODE	DWG. NO.	SIZE / REV.
	Z5LCE2	LH2001	2511803	A

Dwg. File: 251180 Model File: 251180

DWG. NO. 2511803 SIZE REV. A SH. 1

Rev. 1/28/2000 J. Odavel